SONY

DIGITAL VIDEOCASSETTE RECORDER

DSR-1800
DSR-1800P

DIGITAL VIDEOCASSETTE PLAYER

DSR-1600
DSR-1600P

SDI/AES/EBU INPUT/OUTPUT BOARD

DSBK-1801

SDTI (QSDI) INPUT/OUTPUT BOARD

DSBK-1802

i.LINK/DV INPUT/OUTPUT BOARD

DSBK-1803

SDI/AES/EBU OUTPUT BOARD

DSBK-1601

SDTI (QSDI) OUTPUT BOARD

DSBK-1602

SERVICE MANUAL

Volume 2 1st Edition

DVCAM™

⚠警告

このマニュアルは，サービス専用です。
お客様が，このマニュアルに記載された設置や保守，点検，修理などを行うと感電や火災，人身事故につながることがあります。
危険をさけるため，サービストレーニングを受けた技術者のみご使用ください。

設置や保守，点検，修理などを行う前に，別冊のサービスマニュアルVolume 1の「安全のために」と別冊のサービスマニュアルに掲載してある取扱説明書の「安全のために」を必ずお読みください。

⚠WARNING

This manual is intended for qualified service personnel only.
To reduce the risk of electric shock, fire or injury, do not perform any servicing other than that contained in the operating instructions unless you are qualified to do so. Refer all servicing to qualified service personnel.

⚠WARNUNG

Die Anleitung ist nur für qualifiziertes Fachpersonal bestimmt.
Alle Wartungsarbeiten dürfen nur von qualifiziertem Fachpersonal ausgeführt werden. Um die Gefahr eines elektrischen Schlages, Feuergefahr und Verletzungen zu vermeiden, sind bei Wartungsarbeiten strikt die Angaben in der Anleitung zu befolgen. Andere als die angegeben Wartungsarbeiten dürfen nur von Personen ausgeführt werden, die eine spezielle Befähigung dazu besitzen.

⚠AVERTISSEMENT

Ce manual est destiné uniquement aux personnes compétentes en charge de l’entretien. Afin de réduire les risques de décharge électrique, d’incendie ou de blessure n’effectuer que les réparations indiquées dans le mode d’emploi à moins d’être qualifié pour en effectuer d’autres. Pour toute réparation faire appel à une personne compétente uniquement.

目次 / Table of Contents

このマニュアルについて

本書の目的 ..... 5 (J)
関連マニュアル ..... 5 (J)
構成 ..... 6 (J)

Manual Structure

Purpose of this manual ..... 5 (E)
Related manuals ..... 5 (E)
Contents ..... 6 (E)

11. Semiconductor Pin Assignments

12. Spare Parts and Optional Fixtures

12-1. 補修部品注意事項 ..... 12-1 (J)
12-1. Notes on Repair Parts ..... 12-1 (E)
12-2. Exploded Views 12-2
12-3. Electrical Parts Lists 12-31
12-4. Packing Materials and Accessories 12-145
12-5. Optional Fixtures 12-145

13. Block Diagrams

Overall 13-2
IF-820 13-2
CC-83 13-5
CC-84 13-5
CC-85 13-5
SE-521 13-5
SE-522 13-5
SE-538 13-5
DPR-175 13-6
DR-428 13-11
DV-26 13-15
FU-78P 13-16
FU-78R 13-17
KY-484/484A 13-19

PRE-45 13-20
RP-120 13-22
SDI-61 13-27
SDI-61A 13-27
SDI-62 13-28
SDI-62A 13-28
SSP-23 13-30
SSP-24/24A 13-35
VPR-71 13-39

14. Board Layouts

AC-212 14-2
CC-83 14-2
CC-84 14-2
CC-85 14-3
CN-1863 14-3
CN-2021 14-3
CN-2022 14-3
DPR-175 14-5
DR-428 14-8
DV-26 14-10
DY-16 14-11
FU-78P 14-12
FU-78R 14-12
HP-108 14-13
IF-820 14-15
KY-484/484A 14-18
MB-920 14-20
MB-927 14-22
PRE-45 14-24
PTC-100 14-25
RP-120 14-27
SDI-61 14-31
SDI-61A 14-31
SDI-62 14-32
SDI-62A 14-32
SE-521 14-34
SE-522 14-34
SE-525 14-34
SE-538 14-34
SSP-23 14-35

http://getMANUAL.com

SSP-24/24A 14-39
VPR-71 14-42

15. Schematic Diagrams

CC-83 15-3
CC-84 15-3
CC-85 15-3
CN-1863 15-3
DPR-175 15-4
DR-428 15-28
DV-26 15-33
DY-16 15-38
FU-78P 15-41
FU-78R 15-41
HP-108 15-46
IF-820 15-47
KY-484/484A 15-61
MB-920 15-67
MB-927 15-72
PRE-45 15-76
PTC-100 15-84
RP-120 15-85
SDI-61 15-104
SDI-61A 15-104
SDI-62 15-110
SDI-62A 15-110
SE-521 15-121
SE-522 15-121
SE-525 15-121
SE-538 15-121
SSP-23 15-122
SSP-24/24A 15-145
VPR-71 15-163
Frame Wiring (DSR-1600/1600P) 15-183
Frame Wiring (DSR-1800/1800P) 15-187

このマニュアルについて

本書の目的

本書は，デジタルビデオカセットレコーダ DSR-1800 とデジタルビデオカセットプレーヤ DSR-1600 および，それぞれのオプション基板である SDI/AES/EBU 入出力ボード DSBK-1801, SDI/AES/EBU 出力ボード DSBK-1601, SDTI (QSDI) 入出力ボード DSBK-1802, SDTI (QSDI) 出力ボード DSBK-1602 および i.LINK/DV 入出力ボード DSBK-1803 のサービスマニュアル Volume 2 です。
本書では，半導体リスト，パーツリスト，ブロックダイヤグラム，マウント図，回路図を記載しています。

関連マニュアル

本機には，この「サービスマニュアル Volume 2 」のほかに，下記のマニュアルが用意されています。

- **取扱説明書**
  DSR-1800 (DSR-1800 に付属しています)
  部品番号 : 3-204-675-02
  DSR-1600 (DSR-1600 に付属しています)
  部品番号 : 3-204-677-02
  DSBK-1801/1802/1803/1601/1602 (DSBK-1801/1802/1803/1601/1602 に付属しています)
  部品番号 : 3-204-692-01

- **サービスマニュアル　Volume 1 (本機に付属していません)**
  本機の保守に関する情報と，部品交換および調整などのサービスに関する情報を記載しています。
  部品番号 : 9-955-241-11

- **“Semiconductor Pin Assignments” CD-ROM 版（別途用意）**
  この “Semiconductor Pin Assignments” CD-ROM版は，コミュニケーションシステムソリューションネットワークカンパニーの機器に使用されている半導体を検索することができます。
  このCD-ROMで検索できない半導体は，その半導体が使用されている機種のメンテナンスマニュアルに記載されています。メンテナンスマニュアルには，その機種に使用されているすべての半導体一覧とそのID番号を記載していますので，このCD-ROM 版と合わせて使用してください。
  部品番号 : 9-968-546-XX

構成

本書の構成を把握していただくために，全章の概略を以下に説明します。

Section 11　Semiconductor Pin Assignments

本機で使用している半導体の型名一覧とその半導体標準図検索用ID番号を記載しています。
別売の“Semiconductor Pin Assignments”CD-ROM版と合わせてご覧ください。
また，本書作成時に，CD-ROM版に含まれていない半導体標準図がある場合は，本章に追加掲載しています。

Section 12　Spare Parts and Optional Fixtures

セットの全サービス部品を記載しています。

Section 13　Block Diagrams

各基板の機能や信号の流れを示すブロック図を記載しています。

Section 14　Board Layouts

全プリント基板のパターンとシンボル図を記載しています。

Section 15　Schematic Diagrams

全プリント基板の回路図を記載しています。

Manual Structure

Purpose of this manual

This manual is the Service Manual Volume 2 for the digital videocassette recorder DSR-1800/1800P and the digital videocassette player DSR-1600/1600P, the option boards SDI/AES/EBU Input/Output Board DSBK-1801, SDI/AES/EBU Output Board DSBK-1601, SDTI (QSDI) Input/Output Board DSBK-1802, SDTI (QSDI) Output Board DSBK-1602 and i.LINK/DV Input/Output Board DSBK-1803.
This manual contains the semiconductor pin assingnments, parts lists, block diagrams, board layouts and schematic diagrams.

Related manuals

In addition to this Service Manual Volume 2, the following manuals are provided.

- **Operation Instructions**
  DSR-1800/1800P (Supplied with equipment)
  Part number: 3-204-675-12 (English; for UC, CE)
  3-204-675-22 (French; for UC, CE)
  3-204-675-32 (German; for CE)
  3-204-675-42 (Italian; for CE)

  DSR-1600/1600P (Supplied with equipment)
  Part number: 3-204-677-12 (English; for UC, CE)
  3-204-677-22 (French; for UC, CE)
  3-204-677-32 (German; for CE)
  3-204-677-42 (Italian; for CE)

  DSBK-1801/1802/1803/1601/1602 (Supplied with Model DSBK-1801/1802/1803/1601/1602)
  Part number: 3-204-692-01

- **Servive Manual Volume 1 (Not Supplied with equipment)**
  Contains the maintenance information of this equipment and servicing information necessary for parts replacement and adjustments.
  Part number: 9-955-242-11

- **“Semiconductor Pin Assignments” CD-ROM (Available on request)**
  This “Semiconductor Pin Assignments” CD-ROM allows you to search for semiconductors used in Communication System Solutions Network Company equipment.
  Semiconductors that cannot be searched for on this CD-ROM are listed in the maintenance manual for the corresponding unit. The maintenance manual contains a complete list of all semiconductors and their ID Nos., and thus should be used together with the CD-ROM.
  Part number: 9-968-546-XX

Contents

The following is a summary of all the sections for understanding the contents of this manual.

Section 11 Semiconductor Pin Assignments

Contains information on semiconductors used for the unit.
It includes a complete list of the semiconductors and their ID Nos. for retrieving information on “Semiconductor Pin Assignments” CD-ROM, which is available separately.
Please refer to this section together with the “Semiconductor Pin Assignments” CD-ROM.
Information on the semiconductors not contained in the CD-ROM at the time of issue of this manual, if any, is given in this section as well.

Section 12 Spare Parts and Optional Fixtures

Describes the all service parts of the unit.

Section 13 Block Diagrams

Illustrates the block diagrams which show each board function and signal flow.

Section 14 Board Layouts

Shows the board layouts of all circuit boards.

Section 15 Schematic diagrams

Shows the schematic diagrams of all circuit boards.

Section 11
Semiconductor Pin Assignments

The following describes the semiconductor types used in this unit.
For semiconductors marked with page numbers in the index, refer to the corresponding pages in this section. However, in some cases incompatible types are also listed, therefore, when a part is to be replaced, also refer to the Spare Parts section.
In addition, for semiconductors with ID Nos., refer to the separate CD-ROM titled “Semiconductor Pin Assignments” (Sony Part No. 9-968-546-xx) that allows searching for parts by semiconductor type or ID No.
The semiconductors in the manual or on the CD-ROM are listed by equivalent types. Thus the external view or the index mark indication may differ from the actual type.
Pin assignments and block diagrams are based on the IC manufacturer’s data book.

本機に使用されている半導体型名の一覧を下記に示します。
索引中，ページが記載されている半導体は，本章の該当ページを参照してください。ただし，互換性のない型名を併記している場合がありますので，部品を交換するときは，Spare Partsの章を参照してください。
また，ID番号が記載されている半導体は，別途発行の “Semiconductor Pin Assignments” CD−ROM版 (ソニー部品番号：9−968−546−xx)を参照してください。
半導体型名またはID番号から検索ができます。
マニュアルまたはCD−ROMに掲載されている半導体は，それぞれの機能を等価的に表わしたものです。
外観やインデックスマークの表示方法が実物と異なる場合があります。
ピン配置およびブロック図はICメーカーのデータブックに従いました。

DIODE	Page or ID No.
1SR154-400TE-25	DC008-02
1SS187-TE85L	DC001-05
1SS223	DC001-05
1SS300-TE85L	DC001-02
1SS301-TE85L	DC001-03
1SS302	DC001-01
1SS302-TE85L	DC001-01
1SS351-TB	DC001-01
DA204U	DC001-01
DA204UT106	DC001-01
DAN202U	DC001-03
DAN202UT106	DC001-03
DAN217	DC001-01
DAN217-T146	DC001-01
DAP202U	DC001-02
DAP202UT106	DC001-02
DTZ-TT11-3.3B	DC008-04
DTZ5.1B	DC008-04
DTZ9.1	DC008-04
EC11FS4-TE12L	DC007-01
FC805	DC014-02
FC805-TL	DC014-02
HN1D03FU-TE85R	DC005-05
HSM88WK	DC001-03
HSM88WK-TL	DC001-03
KV1470	DC001-13
KV1470TL00	DC001-13
KV1471ETR	11-6
MA141WK	DC001-03
MA795-TX	DC001-06

DIODE	Page or ID No.
NSQ03A04	DC007-01
NSQ03A04-TE16L	DC007-01
RB717F	DC001-02
RB717F-T106	DC001-02
RD11ES-B2	DA001-02
RD11ES-T1B2	DA001-02
RD2.2M-B	11-6
RD2.4M-B	DC001-04
RD2.4M-T1B	DC001-04
RD4.3M-B	DC001-04
RD4.3M-T1B	DC001-04
RD5.6SB	DC008-04
RD6.2ES-B2	DA001-02
RD6.2ES-T1B	DA001-02
RD7.5ES-B1	DA001-02
RD7.5ES-B3	DA001-02
RD7.5ES-T1B1	DA001-02
RD7.5ES-T1B3	DA001-02
RD9.1ES-T1B1	DA001-02
RD9.1ESB1	DA001-02
S1ZAS4F72	11-6
SB007-03CP	DC001-06
SB007-03CP-TB	DC001-06
SB01-05CP	DC001-06
SB01-05CP-TB	DC001-06
SB07-03C	DC001-06
SB07-03C-TB	DC001-06
UDZ-TE-17-2.2B	11-6
UDZ-TE-17-3.3B	DC008-04
UDZ-TE-17-5.1B	DC008-04
UDZ-TE-17-5.6B	DC008-04
UDZ-TE-17-9.1B	DC008-04

Index

LED	Page or ID No.
CL-191HR-CD-T	LC004-02
CL-191YG-CD-T	LC004-01
CL-200HR-C-TSL	11-6
CL-200HR-C-TUL	11-6
CL-200PG-C-TU	LC008-01
CL-200Y-C-TU	LC008-02
GL453	LR052-01
GL453S	LR052-01

TRANSISTOR	Page or ID No.
2SA1162G	TC001-01
2SA1162G-TE85L	TC001-01
2SA1314C-TE12L	TC002-01
2SA1576-R	TC001-01
2SA1576T106R	TC001-01
2SA1611-M5M6	TC001-01
2SA1611T1-M5M6	TC001-01
2SA1813-TL	TC001-01
2SB1115A-T1YQYP	TC002-01
2SB1115A-YQ	TC002-01
2SB624-BV345	TC001-01
2SB624T1-BV345	TC001-01
2SC2712-YG	TC001-02
2SC2712G-TE85L	TC001-02
2SC2873Y-TE12L	TC002-02
2SC2982C-TE12L	TC002-02
2SC3303-Y	TR031-01
2SC3303-Y(TE16L)	TR031-01
2SC3356-K	TC001-02
2SC3356-R24	TC001-02
2SC3356-T1K	TC001-02
2SC3356-T1R24	TC001-02
2SC3392-6-TB	TC001-02
2SC4081T106R	TC001-02
2SC4176-B35	TC001-02
2SC4176-T1B35	TC001-02
2SC4177-L6	TC001-02
2SC4177-T1L5L6	TC001-02
2SC4178-F13	TC001-02
2SC4178-T1F13	TC001-02
2SC4213-B	TC001-02
2SC4213B-TE85L	TC001-02
2SD1615A-GP	TC002-02
2SD1615A-T1GQGP	TC002-02
2SD1623-S	TC002-02
2SD1624-T	TC002-02
2SD1624-T-TD	TC002-02
2SK425-T1X15	TC001-05
2SK425-X15	TC001-05
2SK663	TC001-05
2SK852-T1X3	TC001-05
DTA114EUA	TC001-04
DTA114EUA-T106	TC001-04
DTA123JUA-T106	TC001-04
DTA144EE	TC001-04
DTA144EE-TL	TC001-04
DTA144EKA-T146	TC001-04
DTA144EUA-T106	TC001-04
DTC114EE	TC001-03
DTC114EE-TL	TC001-03
DTC144EE	TC001-03
DTC144EE-TL	TC001-03
DTC144EKA	TC001-03
DTC144EKA-T146	TC001-03
DTC144EUA-T106	TC001-03
FMS2	TC008-07
FMS2-T-148	TC008-07

TRANSISTOR **Page or ID No.**

FMW1 ..... TC008-04
FMW1-T-148 ..... TC008-04
FMW2 ..... TC008-16
FMW2-T-148 ..... TC008-16
FMY3A-T148 ..... TC008-05
FP102T-TL TC014-01

IMZ1 ..... TC005-04
IMZ1T109 ..... TC005-04

PT483F1 ..... TR037-01
PT483F1S TR037-01

SI2307DS-T1 ..... TC001-20
SI4925DY-T1 ..... TC012-02
SI9936DY TC012-01
SI9936DY-T1 ..... TC012-01

UMH11 ..... TC005-08
UMH11-TN TC005-08
UMH2-TN TC005-08
UMY1-TR TC008-08
UMZ1-TL TC005-04
UPA801T-T1/FB TC005-15

XP4213 ..... TC005-08
XP4401-TXE TC006-11

IC **Page or ID No.**

74VHC4052MTCX MC74HC4052N

AK4324-VF-E2 ..... AK4324-VF-E2
AK5352-VF-E2 ..... AK5352-VF-E2
AK6417AM-E2 ..... AK6417AM-E2
AK6440AM-E2 ..... AK6440AM-E2
AN3834S AN3834S

BA6247FP-YE2 11-7
BA6285FP-E2 ..... BA6285FP

CXA1432M CXA1432M
CXA1432M-T4 ..... CXA1432M
CXA1450M-TH CXA1450M
CXA1451M CXA1451M
CXA1451M-TH CXA1451M
CXA1521M-TH CXA1521M
CXA1762Q-T4 ..... CXA1762Q
CXA2018Q-T4 ..... CXA2018Q-T4
CXA2023R-T4 ..... CXA2023R-T4
CXA3178M-T4 ..... CX22017
CXA3240TN-T2 ..... CXA3240TN-T2
CXA3241TN-T2 ..... CXA3241TN-T2
CXA8044Q-T4 ..... CXA8044Q
CXB1341R CXB1341R
CXB1342R CXB1342R
CXD1216M CXD1216M
CXD1216M-TH CXD1216M
CXD2193AR-ER CXD2193AR
CXD2194AR CXD2194AR-TEB
CXD2194AR-TEB CXD2194AR-TEB
CXD2208Q CXD2208Q
CXD2302Q-T4 ..... CXD2302Q
CXD2307R-T6 ..... CXD2307R
CXD2309Q-T6 ..... CXD2309Q-T6
CXD2310AR CXD2310R
CXD2310AR-T4 ..... CXD2310R
CXD2712R CXD2712R
CXD2913AQ CXD2913AQ
CXD2913Q CXD2913AQ
CXD3105R-T6 ..... CXD3105R-T6
CXD3106R CXD3106R
CXD3107R 11-6
CXD8161AQ CXD8161AQ
CXD8243AM CXD8243M
CXD8243AM-ER CXD8243M
CXD8280AQ CXD8280AQ
CXD8281Q CXD8281Q
CXD8385Q CXD8385Q
CXD8386AQ CXD8386AQ
CXD8517Q CXD8517Q
CXD8608R CXD8608R
CXD8621R CXD8621R
CXD8763AR CXD8763AR
CXD8953Q CXD8953Q
CXD8969AR CXD8969AR
CXD9068BR CXD9068AR
CXD9106R CXD9106R
CXD9125R CXD9125R

Index

IC	Page or ID No.
CXD9127R	11-8
CXD9128AR	11-8
CXD9129AR	CXD9129R
CXP912032-208R	11-9
CY62256LL-70SNC-T2	CY62256-70SNC-T2
HA17431UA	NJM431U
HA17431UA-TL	NJM431U
HD6415108RF10	HD6415108RVF5
HD6437021SC02X	HD6437021C02X
HD64F3048VTF8	HD64F3048F
HD64F3048VTF8-D	HD64F3048F
IDT71016S15PH-TL	TC551664AJ-20
IDT71V016S15PH-TL	IDT71V016S20Y-TL
KM6161000BLT-5L	TC551664AJ-20
L78M09T-TL	L78M05T-FA
LB1857M-TE-L	LB1857M-TE-L
LM1881M	LM1881N
LM1881MX	LM1881N
LM2901M	NJM2901N
LM2940SX-5.0	UA7805UC
LM2990SX-5.0	UA7905UC
LM7131BCM5X	AD8055ART-REEL7
M48Z58Y-70MH1TR	M48Z58Y-70MH1TR
M66004M6FP-200D	M66004M6FP200D
M66004M6FP200D	M66004M6FP200D
M66256GP-E2	M66256FP
MAX843ISA-T	11-11
MB40569PFV-ER	MB40569PFV-ER
MB811641642A-100LFN	TC59S6416BFTL-10
MB811643242A-100FN	MB811643242A-100FN
MB88102PFV-G-BND-ER	MB88102PFV-G-BND-ER
MB88346BPFV	MB88346APF
MB88346BPFV-EF	MB88346APF
MBM29F400BC-70PFTN	MBM29F400BA-12PF
MBM29F800BA-70PFTN	MBM29F800BA-90PFTN
MN47V77ST1	MN47V77ST1
NJM062M	RC4558
NJM062M-TE2	RC4558
NJM062V(TE2)	RC4558
NJM082BM	RC4558
NJM082BM(TE2)	RC4558
NJM2060V(TE2)	XRA10324AF
NJM2068M-D-TE2	RC4558
NJM2267M(TE2)	NJM2267M(TE2)
NJM2901M-TE2	NJM2901N
NJM2901V(TE2)	NJM2901N
NJM2903M	UA393DC
NJM2903M-TE2	UA393DC
NJM2903V(TE2)	UA393DC
NJM2904V(TE2)	RC4558
NJM324V(TE2)	XRA10324AF
NJM360M	LM360N
NJM360M-TE2	LM360N
NJM4556AM	RC4558
NJM4556AM-A-TE2	RC4558
NJM4558M-TE2	RC4558
NJM4558V-TE2	RC4558
NJM4580E-D	RC4558
NJM4580E-D-TE2	RC4558
NJM78M09DLA(TE1)	NJM78M12DLA(TE1)
NJM79M09DLA(TE1)	11-11
PLL1700E/2K	11-11
PQ05SZ1U	PQ05SZ11
PQ05SZ5U	PQ05SZ11
PQ20VZ5U	PQ20VZ5U
RH5RL50AA-T1	NJU7201U50
S-80727-SN-DQ-T	S-80720SN-DH
S-80727-SN-DQ-T1	S-80720SN-DH
S-80727SL-AQ-T1	S-80727SL-AQ
S-80745SN-D9-T1	S-80720SN-DH
S-81230SG-QB-T1	S-81230SG
SI-3025LS-TL	SI-3025LS-TL
SN74HC377ANS-E20	TC74HC377P
SN74HC377ANSR	TC74HC377P
SN74LS221DB-E05	SN74221N
SN74LV04APWR	TC74HC04P
SN74LV245ANSR	TC74HC245P
SN74LVCC4245APWR	74LVX4245QSCX
SN75107ANS-LS	SN75107AN
SN75107ANS-LS-E05	SN75107AN
SN75C1168NS-E05	SN75C1168NS
SSM-2142SR	11-11
TA48M03F(TE16L)	TA78M09F
TC4W53FU	TC4W53FU
TC4W53FU(TE12R)	TC4W53FU
TC4W66FU(TE12R)	TC4W66F
TC74HC4052AFT(EL)	MC74HC4052N
TC74HC4053AFT(EL)	MC74HC4053F
TC74VHC02FT(EL)	TC74HC02P
TC74VHC08FT(EL)	TC74HC08P
TC74VHC10FT(EL)	TC74HC10P
TC74VHC11FT(EL)	TC74HC11P
TC74VHC123AFT(EL)	TC74HC123P
TC74VHC125FT(EL)	MC74HC125N
TC74VHC138FT(EL)	TC74HC138P
TC74VHC14FT(EL)	TC74HC14P
TC74VHC157FT(EL)	TC74HC157P
TC74VHC163FT(EL)	TC74HC163P
TC74VHC164FT(EL)	TC74HC164P
TC74VHC21FT(EL)	TC74HC21P
TC74VHC245FT(EL)	TC74HC245P
TC74VHC27FT(EL)	TC74HC27P
TC74VHC32FT(EL)	TC74HC32P
TC74VHC367FT(EL)	TC74HC367P
TC74VHC4040FT(EL)	MC74HC4040N
TC74VHC541FT(EL)	MC74HC541N
TC74VHC573FT(EL)	TC74HC573F
TC74VHC574AFT(EL)	TC74HC574P

http://getMANUAL.com

IC	Page or ID No.
TC74VHC74FT(EL)	TC74HC74P
TC74VHC86FT(EL)	TC74HC86P
TC74VHCT04AFT(EL)	TC74HC04P
TC74VHCT08AFT(EL)	TC74HC08P
TC74VHCT244AFT(EL)	TC74HC244P
TC74VHCT245AFT(EL)	TC74HC245P
TC74VHCT541AF(EL)	MC74HC541N
TC74VHCT541AFT(EL)	MC74HC541N
TC74VHCT573AFT(EL)	TC74HC573F
TC74VHCT574AFT(EL)	TC74HC574P
TC74VHCU04FT(EL)	TC74HC04P
TC7S00FU(TE85R)	TC7S00F
TC7S14F	TC7S14FU
TC7S14F(TE85R)	TC7S14FU
TC7S32FU(TE85R)	TC7S32F
TC7S66F	SC14S66F
TC7S66F(TE85R)	SC14S66F
TC7S66FU	SC14S66F
TC7S66FU(TE85R)	SC14S66F
TC7SET02FU(TE85R)	TC4S01F
TC7SET08FU(TE85R)	TC7S08F
TC7SH00FU-TE85R	TC7S00F
TC7SH02FU	TC4S01F
TC7SH02FU-TE85R	TC4S01F
TC7SH04FU	TC7S04F
TC7SH04FU-TE85R	TC7S04F
TC7SH08FU-TE85R	TC7S08F
TC7SH14FU-TE85R	TC7S14FU
TC7SH32FU-TE85R	TC7S32F
TC7SHU04FU-TE85R	TC7S04F
TC7ST08FU(TE85R)	TC7S08F
TC7W04FU	TC7W04F
TC7W04FU(TE12R)	TC7W04F
TC7W08FU	TC7W08F
TC7W08FU(TE12R)	TC7W08F
TC7W125FU-TE12R	TC7W125FU
TC7W32FU	TC7W32FU
TC7W32FU(TE12R)	TC7W32FU
TC7W53FU(TE12R)	TC4W53FU
TC7W74FU	TC7W74FU
TC7W74FU(TE12R)	TC7W74FU
TC7WH04FU(TE12R)	TC7W04F
TC7WH08FU(TE12R)	TC7W08F
TC7WH125FU(TE12R)	TC7W125FU
TC7WH14FK(TE85R)	TC7W14FU
TC7WH157FU(TE12R)	11-11
TC7WH74FU(TE12R)	TC7W74FU
TC7WHO8FU(TE12R)	TC7W08F
TC7WT241FU(TE12R)	TC7W241FU
TL062CPW	RC4558
TL062CPWR	RC4558
TL064CPW	XRA10324AF
TL064CPW-E05	XRA10324AF
TL082CPW-E05	RC4558
TL084CPW-E20	XRA10324AF
TL084CPWR	XRA10324AF
TLC2932IPW-E20	TLC2932IPW
TLC2932IPWR	TLC2932IPW
TLC5733AIPM	TLC5733IPM

IC	Page or ID No.
TSB11LV01PT-TEB	TSB11LV01PT-TEB
UPC29L05T	UPC78L15T
UPC4558G2	RC4558
UPD482445LG4-B10-9MH-E2-HDC	UPD482445G5-60
UPD78013FYGC-R27-AB8	11-10
UPD82094GD-001-LKL	UPD82014GD-502-LML
XC2S150-5PQ208C	11-12
XC2S50-5PQ208C	11-12
XCS10XL-4TQ144C	11-13
XCS40XL-4PQ208C	XCS40XL-4PQ208C

OTHER	Page or ID No.
GP2S09-B	MA013-01
PR-11-C	MA020-01
PR-11-C-T	MA020-01
SPI-235-18	MR021-01
THS124TE85R	MA016-01
TLP814	MR010-09

Diode, LED, IC

DIODE

—TOP VIEW—

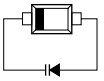

KV1471ETR

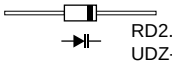

RD2.2M-B
UDZ-TE-17-2.2B

—TOP VIEW—

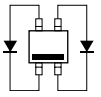

S1ZAS4F72

LED

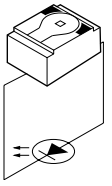

CL-200HR-C-TSL
CL-200HR-C-TUL

IC

CXD3107R (SONY)

C-MOS AUDIO REC/PB SIGNAL PROCESSOR

—TOP VIEW—

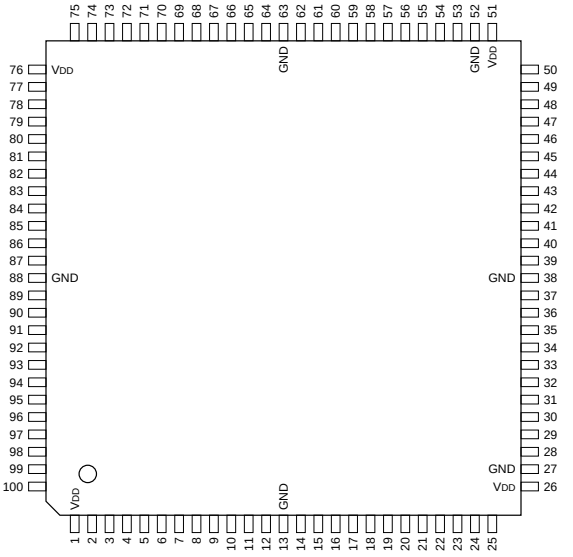

PIN NO.	I/O	SIGNAL	PIN NO.	I/O	SIGNAL	PIN NO.	I/O	SIGNAL	PIN NO.	I/O	SIGNAL
1	—	VDD	26	—	VDD	51	—	VDD	76	—	VDD
2	I/O	D7	27	—	GND	52	—	GND	77	I	$\overline{ACF}$
3	I/O	D6	28	I	FCK	53	I	TRCK	78	I	$\overline{ACT}$
4	I/O	D5	29	I/O	D3	54	I	FLTT	79	O	PBON
5	I/O	D4	30	I/O	D2	55	I	FLTA	80	O	DIIN
6	O	ERRF	31	I/O	D1	56	I/O	A14	81	I/O	A9
7	I	LRCI	32	I/O	D0	57	O	OTEN	82	I/O	A8
8	I	BCKI	33	I/O	$\overline{OE}$	58	O	SFDR	83	I/O	TSCK
9	O	LRCO	34	O	$\overline{ERS}$	59	I	STR1	84	I/O	$\overline{TSG}$
10	O	BCKO	35	O	PRST	60	I	SFP1	85	I/O	TDAT
11	O	LSBO	36	O	PCEZ	61	I	STR2	86	I	TSTM
12	O	DATO	37	O	VEN	62	I	SFP2	87	I	TSAD
13	—	GND	38	—	GND	63	—	GND	88	—	GND
14	I	DATI	39	O	$\overline{HEN}$	64	I	$\overline{RST}$	89	I	TSRM
15	I	NOIN	40	O	SLXM	65	I	$\overline{PS}$	90	I/O	A7
16	O	$\overline{DSPO}$	41	O	SLVX	66	I/O	A13	91	I/O	A6
17	O	$\overline{ATC}$	42	O	DV32	67	I/O	A12	92	I/O	A5
18	O	ATLT	43	I/O	$\overline{WE}$	68	I/O	A11	93	I/O	A4
19	I	TCK	44	I/O	$\overline{CE}$	69	I/O	A10	94	I/O	A3
20	I	TENA3	45	I	MDPL	70	I	$\overline{SCK}$	95	I/O	A2
21	I	TDI	46	O	$\overline{REF}$	71	I	SPSO	96	I/O	A1
22	I	TENA1	47	O	$\overline{VAR}$	72	O	SPSI	97	I/O	A0
23	O	TDO	48	O	$\overline{INT}$	73	I	$\overline{MUT}$	98	O	FSE2
24	I	TRST	49	I	JRDY	74	I	$\overline{DSP}$	99	O	FSE1
25	I	VST	50	I	JDAT	75	I	$\overline{ATT}$	100	O	EMPA

INPUT

$\overline{ACF}$	: MICROCOMPUTER FRAME COMMUNICATION CHIP SELECT
$\overline{ACT}$	: MICROCOMPUTER TRACK-PAIR COMMUNICATION CHIP SELECT
$\overline{ATT}$	: AUTO ATT INTERFACE CHIP SELECT
BCKI	: 64 FS SIGNAL
DATI	: AUDIO DATA
$\overline{DSP}$	: ADSP INTERFACE CHIP SELECT
FCK	: 256 FS CLOCK
FLTA	: RECORDING FRAME SIGNAL
FLTT	: TRANSFER/PLAYBACK FRAME SIGNAL
JDAT	: INTERFACE
JRDY	: INTERFACE
LRCI	: FS SIGNAL
MDPL	: (FOR TEST)
$\overline{MUT}$	: DIRECT MUTING
NOIN	: D/A THROUGH MODE AUDIO DATA
$\overline{PS}$	: POWER SAVE MODE
$\overline{RST}$	: RESET
$\overline{SCK}$	: MICROCOMPUTER TRANSFER CLOCK
SFP1, SFP2	: PLAYBACK DATA
SPSO	: MICROCOMPUTER COMMUNICATION DATA
STR1, STR2	: REC/PB DATA COMMUNICATION START PULSE
TCK	: (FOR TEST)
TDI	: (FOR TEST)
TENA1, TENA3	: (FOR TEST)
TRCK	: MAIN CLOCK
TRST	: (FOR TEST)
TSAD	: (FOR TEST)
TSRM	: (FOR TEST)
TSTM	: (FOR TEST)
VST	: (FOR TEST)

OUTPUT

$\overline{ATC}$	: AUTO ATT INTERFACE CLOCK
ATLT	: AUTO ATT INTERFACE LATCH PULSE
BCKO	: 64 FS SIGNAL
DATO	: AUDIO DATA (MSB FIRST FORMAT)
DIIN	: MICROCOMPUTER INTERFACE SERIAL/PARALLE CONVERSION
DSPO	: ADSP INTERFACE CLOCK
DV32	: INTERFACE
EMPA	: MICROCOMPUTER INTERFACE SERIAL/PARALLEL CONVERSION
$\overline{ERRF}$	: PB AUDIO DATA ERROR RECOGNITION SIGNAL
$\overline{ERS}$	: RESET
FSE1, FSE2	: MICROCOMPUTER INTERFACE SERIAL/PARALLEL CONVERSION
$\overline{HEN}$	: INTERFACE
$\overline{INT}$	: PLAYBACK PHASE CHECKING
LRCO	: FS SIGNAL
LSBO	: AUDIO DATA (LSB FIRST FORMAT)
OTEN	: RECORDING DATA COMMUNICATION ENABLE
PBON	: MICROCOMPUTER INTERFACE SERIAL/PARALLEL CONVERSION
PCEZ	: INTERFACE
PRST	: INTERFACE
$\overline{REF}$	: PHASE COMPARATOR REFERENCE CLOCK
SFDR	: RECORDING DATA
SLVX	: INTERFACE
SLXM	: INTERFACE
SPSI	: MICROCOMPUTER COMMUNICATION DATA
$\overline{TDO}$	: (FOR TEST)
$\overline{VAR}$	: PHASE COMPARATOR COMPARISON CLOCK
VEN	: INTERFACE

INPUT/OUTPUT

A0 - A14	: (FOR TEST)
$\overline{CE}$	: (FOR TEST)
D0 - D7	: (FOR TEST)
$\overline{OE}$	: (FOR TEST)
TDAT	: (FOR TEST)
$\overline{TSCK}$	: (FOR TEST)
$\overline{TSG}$	: (FOR TEST)
$\overline{WE}$	: (FOR TEST)

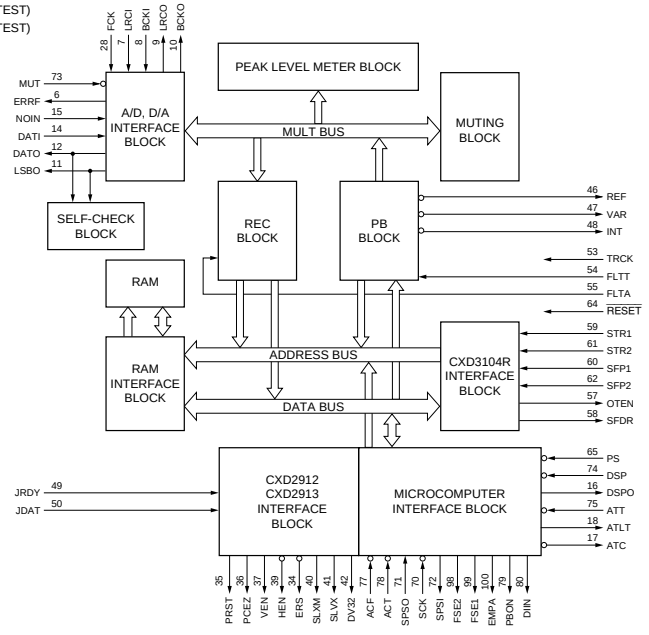

BA6247FP-YE2 (ROHM)

REVERSIBLE MOTOR DRIVER

—TOP VIEW—

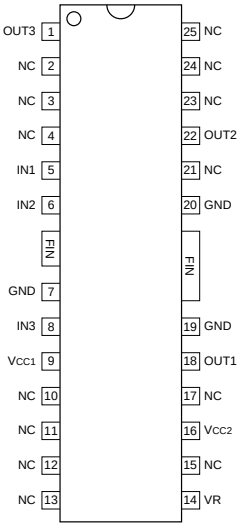

INPUTS			OUTPUTS			FUNCTION
5P IN1	6P IN2	8P IN3	18P OUT1	22P OUT2	1P OUT3	
0	0	0 / 1	0	0	0	BRAKE
1	0	0	1	0	OPEN	CURRENT OUT1 TO OUT2
1	0	1	0	1	OPEN	CURRENT OUT2 TO OUT1
0	1	0	1	OPEN	0	CURRENT OUT1 TO OUT3
0	1	1	0	OPEN	1	CURRENT OUT3 TO OUT2
1	1	0 / 1	0	0	0	BRAKE

0 : LOW LEVEL
1 : HIGH LEVEL

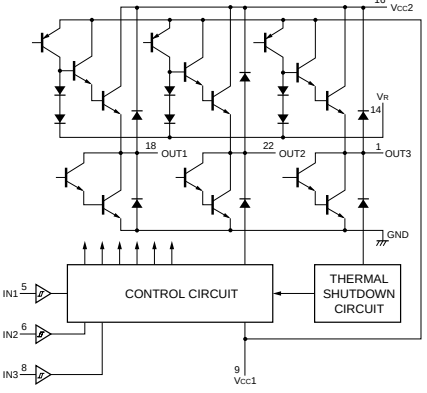

CXD9127R (SONY)

DIGITAL SOUND PROCESSOR

—TOP VIEW—

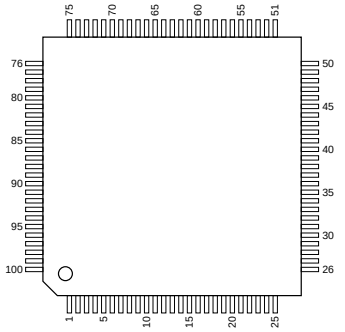

PIN NO.	I/O	SIGNAL	PIN NO.	I/O	SIGNAL	PIN NO.	I/O	SIGNAL	PIN NO.	I/O	SIGNAL
1	I	OENPA	26	—	GND	51	—	GND	76	O	OOEC
2	I	TRCK	27	I	$\overline{CIR}$	52	I	BS0	77	O	INDI OUT 15
3	I	INDI IN 0	28	I	COM CK	53	I	BS1	78	O	INDI OUT 14
4	I	INDI IN 1	29	I	COM CS	54	I	BS2	79	—	GND
5	I	INDI IN 2	30	I	COM DI	55	I	BS3	80	—	Vcc
6	I	INDI IN 3	31	O	COM DO	56	O	BS4	81	O	INDI OUT 13
7	I	INDI IN 4	32	I	IPRST	57	—	GND	82	O	INDI OUT 12
8	I	INDI IN 5	33	I	IPCEZ	58	—	Vcc	83	O	INDI OUT 11
9	I	INDI IN 6	34	I	IDV32	59	I	IA128	84	O	INDI OUT 10
10	I	INDI IN 7	35	I	IXINT	60	I	V512	85	O	INDI OUT 9
11	I	INDI IN 8	36	—	Vcc	61	I	VCK	86	O	INDI OUT 8
12	I	INDI IN 9	37	—	GND	62	—	GND	87	O	INDI OUT 7
13	I	INDI IN 10	38	—	Vcc	63	—	Vcc	88	—	GND
14	I	INDI IN 11	39	—	GND	64	—	GND	89	—	Vcc
15	I	INDI IN 12	40	O	OPRST	65	—	Vcc	90	O	INDI OUT 6
16	I	INDI IN 13	41	O	OPCEZ	66	O	$\overline{INT2}$	91	O	INDI OUT 5
17	I	INDI IN 14	42	O	ODV32	67	O	$\overline{INT1}$	92	O	INDI OUT 4
18	I	INDI IN 15	43	O	PRFI	68	O	IRCK	93	O	INDI OUT 3
19	I	IENPA	44	O	PVRI	69	O	BCK	94	O	INDI OUT 2
20	I	IREN	45	O	TESTO0	70	O	DA34	95	O	INDI OUT 1
21	I	IDFFRE	46	O	TESTO1	71	O	DA12	96	O	INDI OUT 0
22	I	TESTI0	47	O	TESTO2	72	—	GND	97	—	GND
23	I	TESTI1	48	O	TESTO3	73	—	Vcc	98	—	Vcc
24	I	TESTI2	49	O	TESTO4	74	I	TRKT	99	—	Vcc
25	—	Vcc	50	—	Vcc	75	I	FITT	100	—	GND

CXD9128AR (SONY)

SYNC GENERATOR FOR VTR

—TOP VIEW—

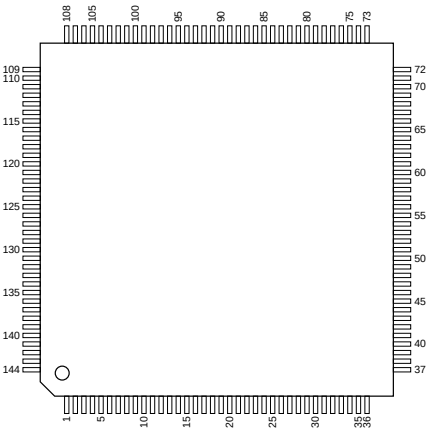

PIN NO.	I/O	SIGNAL	PIN NO.	I/O	SIGNAL	PIN NO.	I/O	SIGNAL	PIN NO.	I/O	SIGNAL
1	O	CK1303	37	O	HS	73	O	RSYN	109	—	GND
2	—	GND	38	O	OVD	74	O	RBG	110	—	GND
3	I	HCK	39	O	TFH	75	O	RBFT	111	O	USC9
4	I	SGCK	40	O	TOFOE	76	O	RBLK	112	O	USC8
5	I	SGH	41	O	OFH	77	O	OSYN	113	O	USC7
6	I	SGOE	42	O	OFOE	78	O	OBG	114	O	USC6
7	O	CLP	43	—	GND	79	O	WIDEO	115	O	USC5
8	I	TRST	44	—	GND	80	—	GND	116	—	GND
9	I	TMS	45	I	HCK27	81	I	WIDEI	117	O	USC4
10	I	TMODE	46	—	Vcc	82	O	$\overline{MAINT}$	118	O	USC3
11	I	TEST	47	O	CK27O	83	O	REFMT	119	O	USC2
12	O	TDO	48	I	CK27I	84	O	RFSEL	120	O	USC1
13	I	TDI	49	O	SEL27O	85	O	EBLK	121	O	USC0
14	I	TCK	50	I	LC27I	86	—	GND	122	O	VSC9
15	I	BCLK	51	I	$\overline{T27I}$	87	I	ESYN	123	O	VSC8
16	I	ACLK	52	O	LC27SEL	88	O	VRI	124	O	VSC7
17	I	$\overline{CS}$	53	O	SYNCINT	89	I	SSYN	125	—	GND
18	—	Vcc	54	I	LALTR	90	—	Vcc	126	—	Vcc
19	O	SO	55	O	SWSYN	91	O	PSH	127	O	VSC6
20	I	$\overline{SI}$	56	O	PH	92	I	$\overline{NONSTD}$	128	O	VSC5
21	I	$\overline{CK}$	57	O	CK1302	93	I	MDSC	129	O	VSC4
22	—	GND	58	—	GND	94	I	SMODE	130	O	VSC3
23	I	SDICK	59	—	Vcc	95	I	SCANIN	131	O	VSC2
24	I	SDIF	60	I	EXVR	96	O	SCANOUT	132	O	VSC1
25	I	SDIV	61	O	SCHLOCK	97	—	GND	133	O	VSC0
26	I	SDIH	62	O	SCO1	98	I	PHI	134	O	HSC9
27	I	SDTICK	63	O	SCO2	99	O	PHO	135	O	HSC8
28	I	SDTIF	64	—	GND	100	O	INPSEL0	136	—	GND
29	I	SDTIV	65	I/O	SM1	101	O	INPSEL1	137	O	HSC7
30	I	SDTIH	66	I/O	SM2	102	O	INPSEL2	138	O	HSC6
31	O	CK1301	67	O	SCINT	103	O	INPSEL3	139	O	HSC5
32	I	$\overline{CLR}$	68	I	EBST	104	O	RSV	140	O	HSC4
33	O	RFOE	69	I	EBG	105	O	OBFT	141	O	HSC3
34	O	FLDI	70	—	GND	106	O	SC401	142	O	HSC2
35	O	JOE	71	O	SC402	107	—	Vcc	143	O	HSC1
36	—	GND	72	I	SC41	108	I	F4SC	144	O	HSC0

CXP912032-208R (SONY)

16-BIT SINGLE CHIP MICROCOMPUTER
—TOP VIEW—

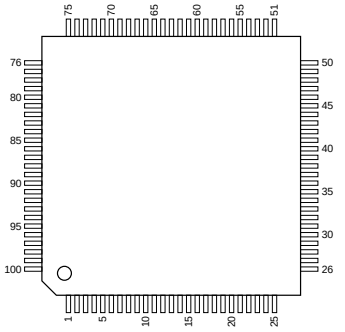

PIN NO.	I/O	SIGNAL	PIN NO.	I/O	SIGNAL	PIN NO.	I/O	SIGNAL	PIN NO.	I/O	SIGNAL
1	O	PB4/PPO012	26	I/O	PE4	51	I	PH0/EXI0	76	I	A.VREF
2	O	PB5/PPO013	27	I/O	PE5	52	I	PH1/EXI1	77	—	A.VCC
3	O	PB6/PPO014	28	I/O	PE6	53	I	PH2/SYNC0/PMI	78	I/O	PJ0/AN4/KS8
4	O	PB7/PPO015	29	I/O	PE7	54	I	PH3/SYNC1	79	I/O	PJ1/AN5/KS9
5	O	PC0/PPO016	30	I	PF0/$\overline{EC0}$/$\overline{INT0}$	55	I	PH4/PMSK	80	I/O	PJ2/AN6/KS10
6	O	PC1/PPO017	31	I	PF1/$\overline{EC2}$/$\overline{INT1}$	56	I	PH5/DPG	81	I/O	PJ3/AN7/KS11
7	O	PC2/PPO018	32	I	PF2/$\overline{CS1}$/$\overline{NMI}$/$\overline{CINT}$	57	I	PH6/DFG	82	I/O	PJ4/AN8/KS12
8	O	PC3/RTO0	33	I	PF3/SI1/$\overline{INT2}$	58	I	PH7/CFG	83	I/O	PJ5/AN9/KS13
9	O	PC4/RTO1	34	O	PF4/SO1	59	I	$\overline{CS0}$	84	I/O	PJ6/AN10/KS14
10	O	PC5/RTO2	35	I/O	PF5/$\overline{SCK1}$	60	I	SI0	85	I/O	PJ7/AN11/KS15
11	O	PC6/RTO3	36	O	PF6/T1	61	O	SO0	86	—	NC
12	O	PC7/RTO4	37	O	PF7/T2	62	I/O	$\overline{SCK0}$	87	—	VCC
13	—	GND	38	I/O	$\overline{RST}$	63	I/O	PI0/SI2	88	—	GND
14	I/O	PD0/KS0	39	—	GND	64	I/O	PI1/SO2	89	O	PA0/PPO000/PPO100
15	I/O	PD1/KS1	40	O	XTAL	65	I/O	PI2/$\overline{SCK2}$	90	O	PA1/PPO001/PPO101
16	I/O	PD2/KS2	41	I	EXTAL	66	I/O	PI3/$\overline{CS2}$/PO	91	O	PA2/PPO002/PPO102
17	I/O	PD3/KS3	42	—	VCC	67	I	PI4/PCK/OSCI	92	O	PA3/PPO003/PPO103
18	I/O	PD4/KS4	43	O	PG0/PWM0	68	I	PI5/OSCO	93	O	PA4/PPO004/PPO104
19	I/O	PD5/KS5	44	O	PG1/PWM1	69	I/O	PI6/XOUT	94	O	PA5/PPO005/PPO105
20	I/O	PD6/KS6	45	O	PG2/PWM2	70	—	GND	95	O	PA6/PPO006/PPO106
21	I/O	PD7/KS7	46	O	PG3/PWM3	71	I	PI7/ANO	96	O	PA7/PPO007/PPO107
22	I/O	PE0	47	O	PG4/DA0	72	I	AN1	97	O	PB0/PPO008/PPO108
23	I/O	PE1	48	O	PG5/DA1	73	I	AN2	98	O	PB1/PPO009/PPO109
24	I/O	PE2	49	I	PG6/RFG0	74	I	AN3	99	O	PB2/PPO010
25	I/O	PE3	50	I	PG7/RFG1	75	—	A.GND	100	O	PB3/PPO011

INPUTS

A.VREF	: REFERENCE VOLTAGE FOR A/D CONVERTER
AN0 - AN11	: ANALOG INPUT TO A/D CONVERTER
CFG	: CAPSTAN FG INPUT
$\overline{CINT}$	: EXTERNAL CAPCHER FOR 16-BIT TIMER/COUNTER
$\overline{CS0}$ - $\overline{CS2}$	: SERIAL CHIP SELECT
$\overline{DFG}$, $\overline{DPG}$	: DRUM FG INPUT
$\overline{EC0}$, $\overline{EC2}$	: EXTERNAL EVENT TO TIMER/COUNTER
EXI0, EXI1	: EXTERNAL INPUT TO FRC CAPCHER UNIT
EXTAL	: CRYSTAL OSCILLATOR FOR SYSTEM CLOCK
$\overline{INT0}$ - $\overline{INT2}$	: INTERRUPT REQUEST
$\overline{NMI}$	: NONMASKABLE INTERRUPT REQUEST
OSCI	: CRYSTAL OSCILLATOR FOR PRE-SCALER CLOCK OSCILLATION
PCK	: PRE-SCALER CLOCK
PF0 - PF3	: PORT F
PG6, PG7	: PORT G
PH0 - PH7	: PORT H
PI4 - PI7	: PORT I
PMI	: PULSE INPUT FOR PULSE PERIODICITY MEASUREMENT
PMSK	: MASK INPUT FOR PULSE PERIODICITY MEASUREMENT
RFG0, RFG1	: REEL FG
SI0 - SI2	: SERIAL DATA
SYNC0, SYNC1	: COMPOSITE SYNC

OUTPUTS

DA0, DA1	: DA GATE PULSE
OSCO	: CRYSTAL OSCILLATOR FOR PRE-SCALER CLOCK OSCILLATION
PA0 - PA7	: PORT A
PB0 - PB7	: PORT B
PC0 - PC7	: PORT C
PF4 - PF7	: PORT F
PG0 - PG5	: PORT G
PO	: PRE-SCALER
PPO000 - PPO018	: PROGRAMMABLE PATTERN GENERATOR
PPO100 - PPO109	: PROGRAMMABLE PATTERN GENERATOR
PTO0 - PTO4	: REALTIME PULLSE
PWM0 - PWM3	: 14-BIT PWM OUTPUT
SO0 - SO2	: SERIAL DATA
T1	: 8-BIT TIMER/COUNTER
T2	: 16-BIT CAPCHER TIMER/COUNTER
XOUT	: CLOCK FROM CLOCK GENERATOR OR PRE-SCALER
XTAL	: CRYSTAL OSCILLATOR

INPUTS/OUTPUTS

PD0 - PD7	: PORT D
PE0 - PE7	: PORT E
PI0 - PI3	: PORT I
PJ0 - PJ7	: PORT J
$\overline{RST}$	: SYSTEM RESET
$\overline{SCK0}$ - $\overline{SCK2}$	: SERIAL CLOCK

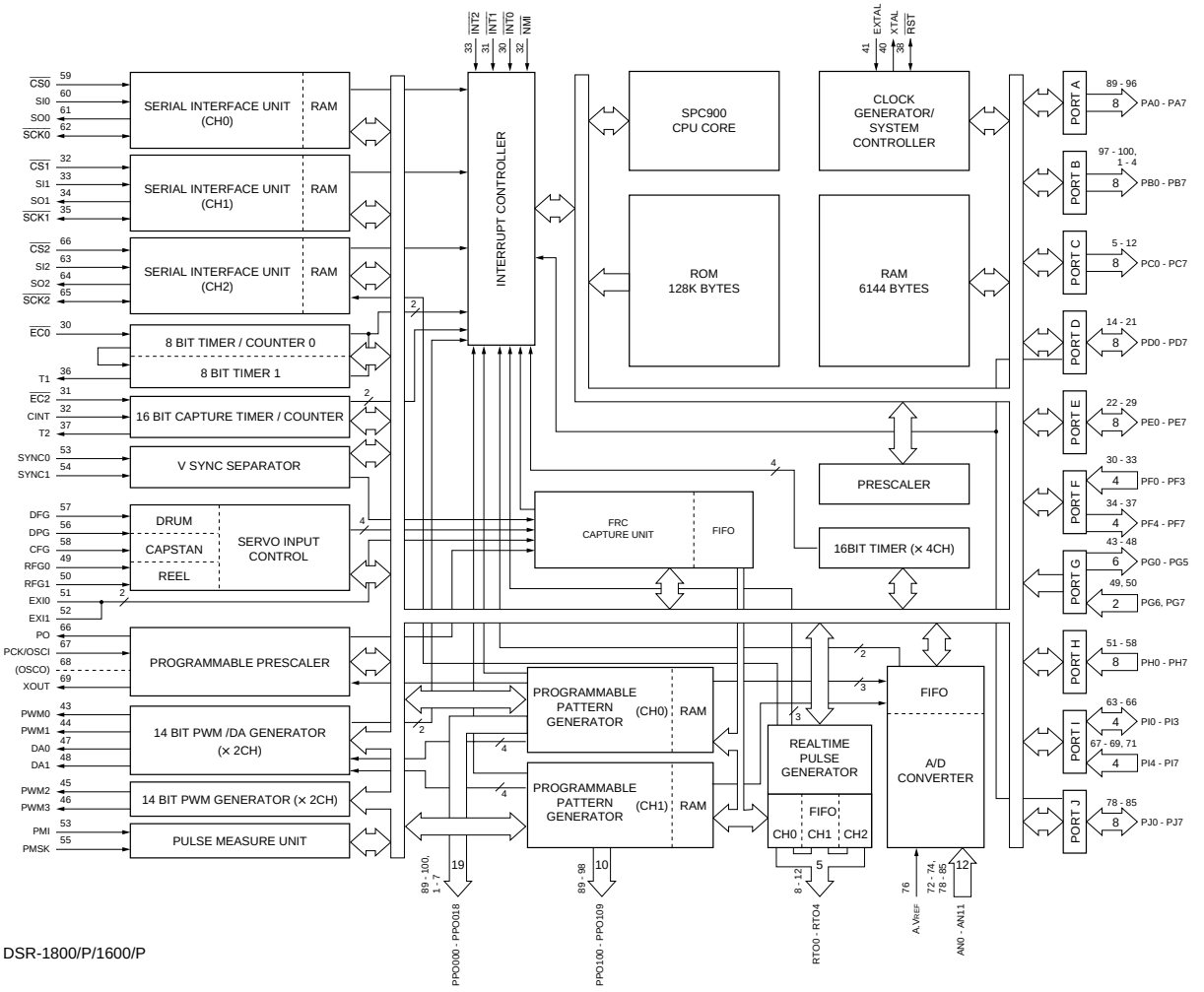

UPD78013FYGC-R27-AB8 (NEC)

8-BIT SINGLE CHIP MICROCOMPUTER

—TOP VIEW—

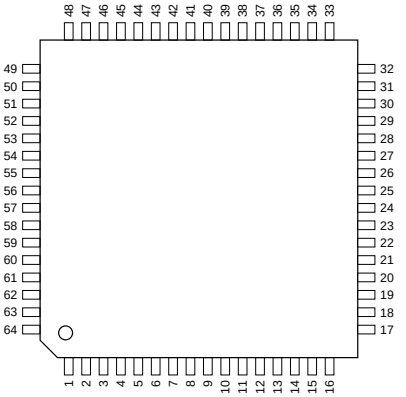

PIN NO.	I/O	SIGNAL	PIN NO.	I/O	SIGNAL	PIN NO.	I/O	SIGNAL	PIN NO.	I/O	SIGNAL
1	I/O	P30/TO0	17	I/O	P47/AD7	33	I/O	P66/WAIT	49	I/O	P12/ANI2
2	I/O	P31/TO1	18	I/O	P50/A8	34	I/O	P67/ASTB	50	I/O	P13/ANI3
3	I/O	P32/TO2	19	I/O	P51/A9	35	I	RESET	51	I/O	P14/ANI4
4	I/O	P33/TI1	20	I/O	P52/A10	36	I	P00/INTP0/TI0	52	I/O	P15/ANI5
5	I/O	P34/TI2	21	I/O	P53/A11	37	I/O	P01/INTP1	53	I/O	P16/ANI6
6	I/O	P35/PCL	22	I/O	P54/A12	38	I/O	P02/INTP2	54	I/O	P17/ANI7
7	I/O	P36/BUZ	23	I/O	P55/A13	39	I/O	P03/INTP3	55	—	A.VCC
8	I/O	P37	24	—	GND	40	—	VCC	56	I	AVREF
9	—	GND	25	I/O	P56/A14	41	I	X2	57	I/O	P20/SI1
10	I/O	P40/AD0	26	I/O	P57/A15	42	I	X1	58	I/O	P21/SO1
11	I/O	P41/AD1	27	I/O	P60	43	—	IC	59	I/O	P22/SCK1
12	I/O	P42/AD2	28	I/O	P61	44	I	XT2	60	I/O	P23/STB
13	I/O	P43/AD3	29	I/O	P62	45	I	P04/XT1	61	I/O	P24/BUSY
14	I/O	P44/AD4	30	I/O	P63	46	—	A.GND	62	I/O	P25/SI0/SB0/SDA0
15	I/O	P45/AD5	31	I/O	P64/RD	47	I/O	P10/ANI0	63	I/O	P26/SO0/SB1/SDA1
16	I/O	P46/AD6	32	I/O	P65/WR	48	I/O	P11/ANI1	64	I/O	P27/SCK0/SCL

INPUTS

ANI0 - ANI7	:	ANALOG
AVREF	:	ANALOG REFERENCE VOLTAGE
BUSY	:	BUSY
INTP0 - INTP3	:	INTERRUPT FROM PERIPHERALS
P00, P04	:	PORT0
RESET	:	RESET
SI0, SI1	:	SERIAL
TI0 - TI2	:	TIMER
WAIT	:	WAIT
X1, X2	:	CRYSTAL (MAIN SYSTEM CLOCK)
XT1, XT2	:	CRYSTAL (SUBSYSTEM CLOCK)

OUTPUTS

A8 - A15	:	ADDRESS BUS
ASTB	:	ADDRESS STROBE
BUZ	:	BUZZER CLOCK
PCL	:	PROGRAMMABLE CLOCK
RD	:	READ STROBE
SO0, SO1	:	SERIAL
STB	:	STROBE
TO0 - TO2	:	TIMER
WR	:	WRITE STROBE

INPUTS/OUTPUTS

AD0 - AD7	:	ADDRESS/DATA BUS
P01 - P03	:	PORT0
P10 - P17	:	PORT1
P20 - P27	:	PORT2
P30 - P37	:	PORT3
P40 - P47	:	PORT4
P50 - P57	:	PORT5
P60 - P67	:	PORT6
SB0, SB1	:	SERIAL BUS
SCK0, SCK1	:	SERIAL CLOCK
SCL	:	SERIAL CLOCK
SDA0, SDA1	:	SERIAL DATA

OTHER

IC	:	INTERNAL CONNECTION

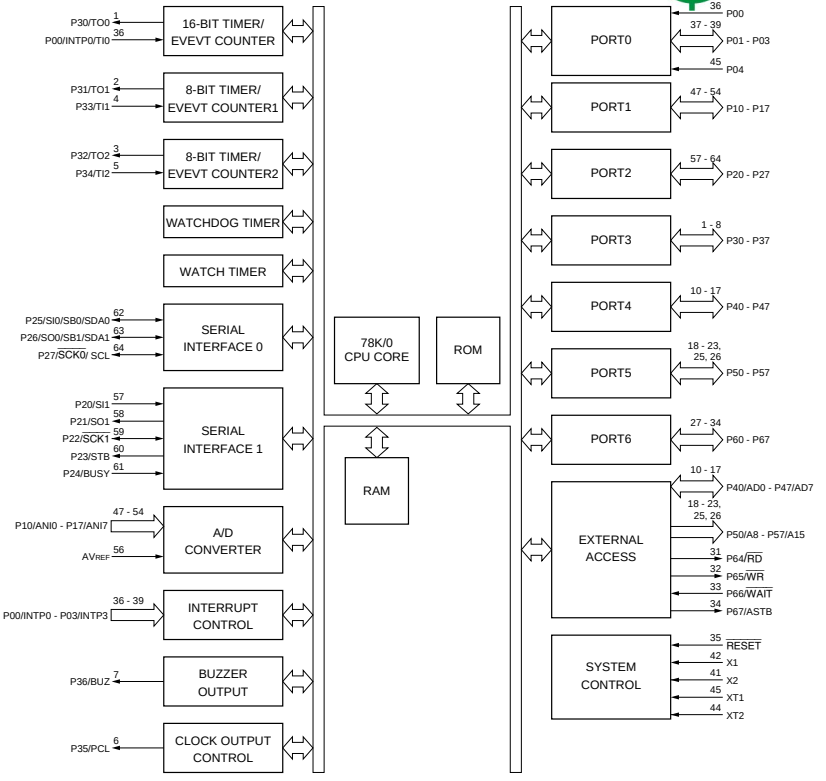

MAX843ISA-T (MAXIM)

VOLTAGE REGULATOR
—TOP VIEW—

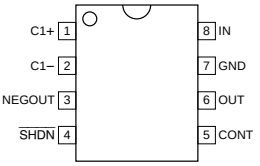

INPUTS
C1– : NEGATIVE TERMINAL FOR C1
C1+ : POSITIVE TERMINAL FOR C1
CONT : CONTROL VOLTAGE INPUT
IN : POSITIVE POWER - SUPPLY INPUT
NEGOUT : NEGATIVE OUTPUT VOLTAGE (UNREGULATED)
$\overline{SHDN}$: TTL LOGIC-LEVEL SHUTDOWN INPUT

OUTPUT
OUT : REGULATED NEGATIVE OUTPUT VOLTAGE

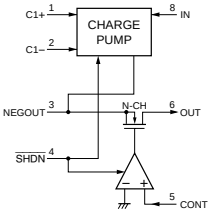

NJM79M09DLA(TE1) (JRC)

NEGATIVE VOLTAGE REGULATOR
—FRONT VIEW—

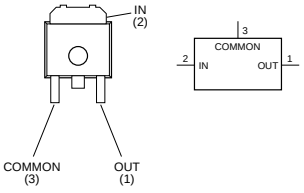

TC7WH157FU(TE12R) (TOSHIBA)

2-CHANNEL MULTIPLEXER
—TOP VIEW—

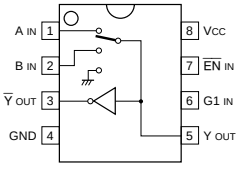

INPUTS				OUTPUTS	
$\overline{EN}$	G1	A	B	Y	$\overline{Y}$
1	×	×	×	0	1
0	0	0	×	0	1
0	0	1	×	1	0
0	1	×	0	0	1
0	1	×	1	1	0

0 : LOW LEVEL
1 : HIGH LEVEL
× : DON'T CARE

SSM-2142SR (AD)

BALANCED LINE DRIVER
—TOP VIEW—

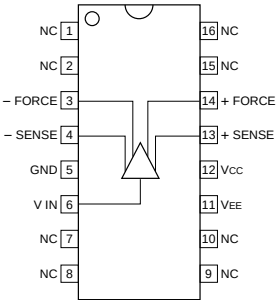

PLL1700E/2K (BURR-BROWN)

PROGRAMMABLE DUAL PLL CLOCK GENERATOR
—TOP VIEW—

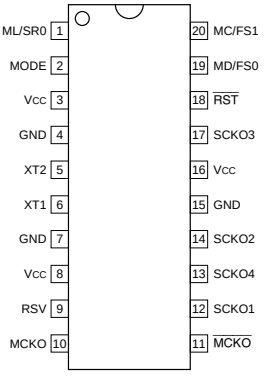

INPUTS
MC/FS1 : BIT CLOCK INPUT FOR CONTROL DATA (SOFTWARE MODE)/
SAMPLING FREQUENCY GROUP CONTROL (HARDWARE MODE)
MD/FS0 : DATA INPUT FOR CONTROL DATA (SOFTWARE MODE)/
SAMPLING FREQUENCY GROUP CONTROL (HARDWARE MODE)
ML/SR0 : LOAD STROBE INPUT FOR CONTROL DATA (SOFTWARE MODE)/
DOUBLE SAMPLING RATE CONTROL (HARDWARE MODE)
MODE : MODE SELECT FOR CONTROL DATA (H: HURRIER MODE, L: SOFTWARE MODE)
$\overline{RST}$: RESET (L RESET)
XT1 : 27MHz CRYSTAL OSCILLATOR OR EXTERNAL CLOCK INPUT

OUTPUTS
MCKO : 27MHz MASTER CLOCK OUTPUT
$\overline{MCKO}$: 27MHz MASTER CLOCK OUTPUT (INVERTED)
SCKO1 : SYSTEM CLOCK OUTPUT1 (33.8688MHz)
SCKO2 : SYSTEM CLOCK OUTPUT 2 (256 fs)
SCKO3 : SYSTEM CLOCK OUTPUT 3 (384 fs)
SCKO4 : SYSTEM CLOCK OUTPUT 4 (768 fs)
XT2 : 27MHz CRYSTAL OSCILLATOR, CONNECTED TO GROUND AT EXTERNAL CLOCK

OTHER
RSV : RESERVED (MUST BE OPEN)

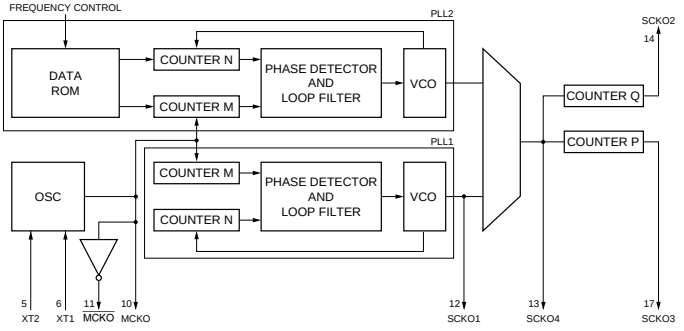

XC2S150-5PQ208C (XILINX)
XC2S50-5PQ208C (XILINX)

FIELD PROGRAMMABLE GATE ARRAY
—TOP VIEW—

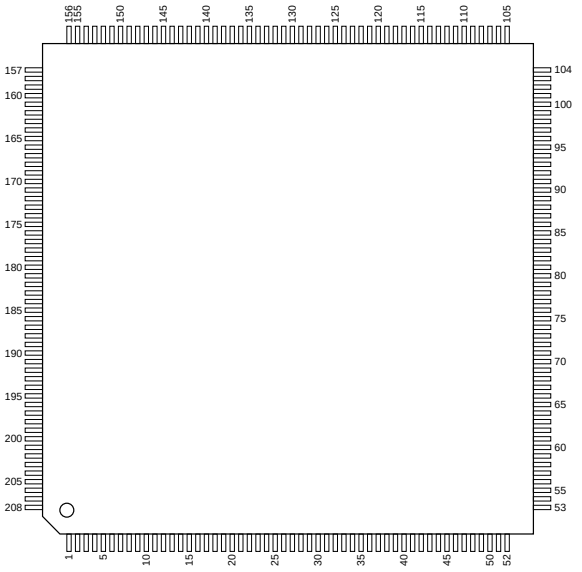

PIN NO.	I/O	SIGNAL	PIN NO.	I/O	SIGNAL	PIN NO.	I/O	SIGNAL	PIN NO.	I/O	SIGNAL
1	—	GND	53	—	VCC	105	—	VCC	157	O	TDO
2	I	TMS	54	I	M2	106	I	PROGRAM	158	—	GND
3	I/O	I/O	55	I	PWDN	107	I/O	I/O (INIT)	159	I	TDI
4	I/O	I/O	56	O	STATUS	108	I/O	I/O (D7)	160	I/O	I/O (CS)
5	I/O	I/O	57	I/O	I/O	109	I/O	I/O	161	I/O	I/O (WRITE)
6	I/O	I/O, VREF	58	I/O	I/O	110	I/O	I/O	162	I/O	I/O
7	I/O	I/O	59	I/O	I/O, VREF	111	I/O	I/O, VREF	163	I/O	I/O
8	I/O	I/O	60	I/O	I/O	112	I/O	I/O	164	I/O	I/O, VREF
9	I/O	I/O	61	I/O	I/O	113	I/O	I/O	165	I/O	I/O
10	I/O	I/O	62	I/O	I/O	114	I/O	I/O	166	I/O	I/O
11	—	GND	63	I/O	I/O	115	I/O	I/O (D6)	167	I/O	I/O
12	—	VCC	64	—	GND	116	—	GND	168	I/O	I/O
13	—	VCC	65	—	VCC	117	—	VCC	169	—	GND
14	I/O	I/O	66	—	VCC	118	—	VCC	170	—	VCC
15	I/O	I/O	67	I/O	I/O	119	I/O	I/O (D5)	171	—	VCC
16	I/O	I/O	68	I/O	I/O	120	I/O	I/O	172	I/O	I/O
17	I/O	I/O	69	I/O	I/O	121	I/O	I/O	173	I/O	I/O
18	I/O	I/O	70	I/O	I/O	122	I/O	I/O	174	I/O	I/O
19	—	GND	71	I/O	I/O	123	I/O	I/O	175	I/O	I/O
20	I/O	I/O, VREF	72	—	GND	124	—	GND	176	I/O	I/O
21	I/O	I/O	73	I/O	I/O, VREF	125	I/O	I/O, VREF	177	—	GND
22	I/O	I/O	74	I/O	I/O	126	I/O	I/O (D4)	178	I/O	I/O, VREF
23	I/O	I/O	75	I/O	I/O	127	I/O	I/O	179	I/O	I/O
24	I/O	I/O, IRDY	76	—	VCC	128	—	VCC	180	I/O	I/O
25	—	GND	77	I	GCK1	129	I/O	I/O, TRDY	181	I/O	I/O
26	—	VCC	78	—	VCC	130	—	VCC	182	I	GCK2
27	I/O	I/O, TRDY	79	—	GND	131	—	GND	183	—	GND
28	—	VCC	80	I	GCK0	132	I/O	I/O, IRDY	184	—	VCC
29	I/O	I/O	81	I/O	I/O	133	I/O	I/O	185	I	GCK3
30	I/O	I/O	82	I/O	I/O	134	I/O	I/O	186	—	VCC
31	I/O	I/O, VREF	83	I/O	I/O	135	I/O	I/O (D3)	187	I/O	I/O
32	—	GND	84	I/O	I/O, VREF	136	I/O	I/O, VREF	188	I/O	I/O
33	I/O	I/O	85	—	GND	137	—	GND	189	I/O	I/O, VREF
34	I/O	I/O	86	I/O	I/O	138	I/O	I/O	190	—	GND
35	I/O	I/O	87	I/O	I/O	139	I/O	I/O	191	I/O	I/O
36	I/O	I/O	88	I/O	I/O	140	I/O	I/O	192	I/O	I/O
37	I/O	I/O	89	I/O	I/O	141	I/O	I/O	193	I/O	I/O
38	—	VCC	90	I/O	I/O	142	I/O	I/O (D2)	194	I/O	I/O
39	—	VCC	91	—	VCC	143	—	VCC	195	I/O	I/O
40	—	GND	92	—	VCC	144	—	VCC	196	—	VCC
41	I/O	I/O	93	—	GND	145	—	GND	197	—	VCC
42	I/O	I/O	94	I/O	I/O	146	I/O	I/O (D1)	198	—	GND
43	I/O	I/O	95	I/O	I/O	147	I/O	I/O	199	I/O	I/O
44	I/O	I/O	96	I/O	I/O	148	I/O	I/O	200	I/O	I/O
45	I/O	I/O, VREF	97	I/O	I/O	149	I/O	I/O	201	I/O	I/O
46	I/O	I/O	98	I/O	I/O, VREF	150	I/O	I/O, VREF	202	I/O	I/O
47	I/O	I/O	99	I/O	I/O	151	I/O	I/O	203	I/O	I/O, VREF
48	I/O	I/O	100	I/O	I/O	152	I/O	I/O	204	I/O	I/O
49	I/O	I/O	101	I/O	I/O	153	I/O	I/O (DIN, D0)	205	I/O	I/O
50	I	M1	102	I/O	I/O	154	I/O	I/O (DOUT, BUSY)	206	I/O	I/O
51	—	GND	103	—	GND	155	I/O	CCLK	207	I	TCK
52	I	M0	104	O	DONE	156	—	VCC	208	—	VCC

INPUTS

CS	:	CHIP SELECT SIGNAL
D0 - D7	:	DATA
DIN	:	SERIAL CONFIGURATION DATA
GCK0 - GCK3	:	GLOBAL CLOCK
M0 - M2	:	MODE
PROGRAM	:	PROGRAM
PWDN	:	POWER DOWN MODE
TCK	:	TEST CLOCK
TDI	:	TEST DATA
TMS	:	TEST MODE SELECT
VREF	:	REFERENCE VOLTAGE
WRITE	:	WRITE ENABLE SIGNAL

OUTPUTS

BUSY/DOUT	:	BUSY/SERIAL CONFIGURATION DATA
DONE	:	INPUT FOR DELAYING THE GLOBAL LOGIC INITIALIZATION & OUTPUT ENABLE/OUTPUT FOR INDICATING THE COMPLETION OF THE CONFIGURATION
STATUS	:	STATUS
TDO	:	TEST DATA

INPUTS/OUTPUTS

CCLK	:	CONFIGURATION CLOCK
INIT	:	INTERNAL CONFIGURATION MEMORY CLEAR

XCS10XL-4TQ144C (XILINX)

FIELD PROGRAMMABLE GATE ARRAY

—TOP VIEW—

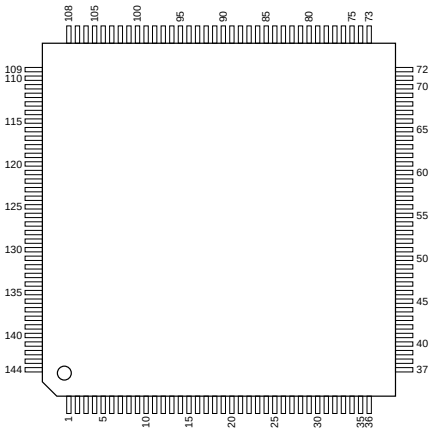

PIN NO.	I/O	SIGNAL	PIN NO.	I/O	SIGNAL	PIN NO.	I/O	SIGNAL	PIN NO.	I/O	SIGNAL
1	—	GND	37	—	Vcc	73	—	Vcc	109	O	O, TDO
2	I/O	I/O, PGCK1	38	I	NC, PWRDWN	74	I	PROGRAM	110	—	GND
3	I/O	I/O	39	I/O	I/O, PGCK2	75	I/O	I/O (D7)	111	I/O	I/O
4	I/O	I/O	40	I/O	I/O (HDC)	76	I/O	I/O, PGCK3	112	I/O	I/O, PGCK4
5	I/O	I/O	41	I/O	I/O	77	I/O	I/O	113	I/O	I/O
6	I/O	I/O, TDI	42	I/O	I/O	78	I/O	I/O	114	I/O	I/O
7	I/O	I/O, TCK	43	I/O	I/O	79	I/O	I/O (D6)	115	I/O	I/O (CS1)
8	—	GND	44	I/O	I/O (LDC)	80	I/O	I/O	116	I/O	I/O
9	I/O	I/O	45	—	GND	81	—	GND	117	—	NC
10	I/O	I/O	46	I/O	I/O	82	I/O	I/O	118	—	GND
11	I/O	I/O, TMS	47	I/O	I/O	83	I/O	I/O	119	I/O	I/O
12	I/O	I/O	48	I/O	I/O	84	I/O	I/O (D5)	120	I/O	I/O
13	I/O	I/O	49	I/O	I/O	85	I/O	I/O	121	I/O	I/O
14	I/O	I/O	50	I/O	I/O	86	I/O	I/O	122	I/O	I/O
15	I/O	I/O	51	I/O	I/O	87	I/O	I/O	123	I/O	I/O
16	I/O	I/O	52	I/O	I/O	88	I/O	I/O (D4)	124	I/O	I/O
17	—	GND	53	I/O	I/O (INIT)	89	I/O	I/O	125	I/O	I/O
18	—	Vcc	54	—	Vcc	90	—	Vcc	126	I/O	I/O
19	I/O	I/O	55	—	GND	91	—	GND	127	—	GND
20	I/O	I/O	56	I/O	I/O	92	I/O	I/O (D3)	128	—	Vcc
21	I/O	I/O	57	I/O	I/O	93	I/O	I/O	129	I/O	I/O
22	I/O	I/O	58	I/O	I/O	94	I/O	I/O	130	I/O	I/O
23	I/O	I/O	59	I/O	I/O	95	I/O	I/O	131	I/O	I/O
24	I/O	I/O	60	I/O	I/O	96	I/O	I/O (D2)	132	I/O	I/O
25	I/O	I/O	61	I/O	I/O	97	I/O	I/O	133	I/O	I/O
26	I/O	I/O	62	I/O	I/O	98	I/O	I/O	134	I/O	I/O
27	—	GND	63	I/O	I/O	99	I/O	I/O	135	I/O	I/O
28	I/O	I/O	64	—	GND	100	—	GND	136	I/O	I/O
29	I/O	I/O	65	I/O	I/O	101	I/O	I/O (D1)	137	—	GND
30	I/O	I/O	66	I/O	I/O	102	I/O	I/O	138	I/O	I/O
31	I/O	I/O	67	I/O	I/O	103	I/O	I/O	139	I/O	I/O
32	I/O	I/O	68	I/O	I/O	104	I/O	I/O	140	I/O	I/O
33	I/O	I/O, SGCK2	69	I/O	I/O	105	I/O	I/O (D0, DIN)	141	I/O	I/O
34	I	NC, M1	70	I/O	I/O, SGCK3	106	I/O	I/O, SGCK4 (DOUT)	142	I/O	I/O
35	—	GND	71	—	GND	107	I/O	CCLK	143	I/O	I/O, SGCK1
36	I	MODE, M0	72	I/O	DONE	108	—	Vcc	144	—	Vcc

INPUTS

CS1 : SERIAL ENABLE
D0 - D7 : DATA
DIN : DATA INPUT RECEIVING DATA
M0, M1, MODE : MODE
PROGRAM : CONFIGURATION MEMORY
PWRDWN : POWER DOWN
TCK : TEST CLOCK
TDI : TEST DATA INPUT
TMS : TEST MODE

OUTPUTS

HDC : HIGH DURING CONFIGURATION
LDC : LOW DURING CONFIGURATION
O, TDO : TEST DATA OUTPUT

INPUTS/OUTPUTS

CCLK : CONFIGURATION CLOCK
DONE : COMPLETION OF THE CONFIGURATION PROCESS
I/O : INPUT AND OUTPUT
INIT : INTERNAL CLEARING/INTERNAL WAIT
PGCK1 - PGCK4 : PRIMARY GLOBAL INPUT
SGCK1 - SGCK4 : SECONDARY GLOBAL INPUT

OTHER

NC : NO CONNECTION

http://getMANUAL.com

Section 12
Spare Parts and Optional Fixtures

12-1. 補修部品注意事項

1. 安全重要部品

⚠警告

⚠印のついた部品は安全性を維持するために重要な部品です。したがって，交換する時は必ず指定の部品を使ってください。

2. 部品の共通化

ソニーから供給する補修用部品は，セットに使われているものと異なることがあります。
これは部品の共通化，改良等によるものです。
部品表には現時点での共通化された補修用部品が記載されています。

3. 部品の在庫

部品表のSP (Supply code) 欄に“o”で示される部品は在庫していないことがあり，納期が長くなることがあります。

4. ハーネス

部品番号が記載されていないハーネスは，サービス部品として登録されていません。
これらは，リストに展開されているコンポーネント部品で補修してください。

5. 仕向区分の表記

部品表中，下記表示のある部品は，その仕向で使用している部品です。

For J:　日本向けモデルに使用
For UC: USAおよびカナダ向けモデルに使用
For CE: 上記以外向けモデルに使用

Section 12
Spare Parts and Optional Fixtures

12-1. Notes on Repair Parts

1. Safety Related Components Warning

WARNING

Components marked ⚠ are critical to safe operation. Therefore, specified parts should be used in the case of replacement.

2. Standardization of Parts

Some repair parts supplied by Sony differ from those used for the unit. These are because of parts commonality and improvement.
Parts list has the present standardized repair parts.

3. Stock of Parts

Parts marked with “o” at SP (Supply Code) column of the spare parts list may not be stocked. Therefore, the delivery date will be delayed.

4. Harness

Harnesses with no part number are not registered as spare parts.
In need of repair, get components shown in the list and repair using them.

5. Destination Representation

The part indicated “For J/UC/CE” in the spare parts list is used in the unit written below.

For J: The part is used in a unit for Japan.
For UC: The part is used in a unit for the U.S.A. and Canada.
For CE: The part is used in a unit for regions except the above countries.

12-2. Exploded Views

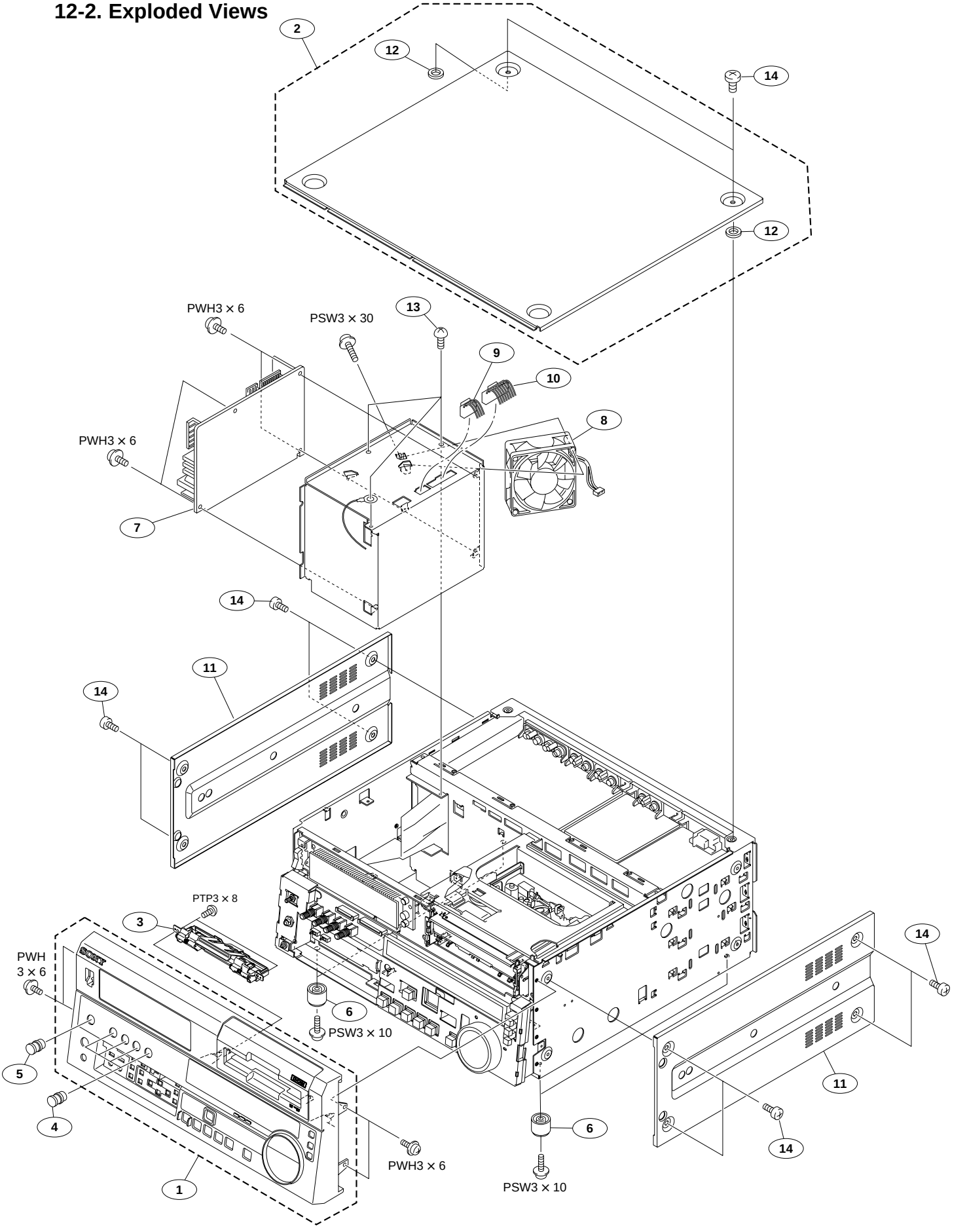

No.	Part No.	SP	Description
1	A-8279-442-C	o	PANEL ASSY,FRONT (for DSR-1800)
	A-8279-445-A	o	PANEL ASSY(P),FRONT (for DSR-1800P)
	A-8279-446-A	o	PANEL ASSY,FRONT (for DSR-1600)
	A-8279-447-A	o	PANEL ASSY(P),FRONT (for DSR-1600P)
2	A-8279-443-D	o	PLATE ASSY,TOP
3	A-8323-717-E	s	GUIDE ASSY, CASSETTE
4	X-3167-824-1	o	KNOB ASSY (R), VOL
5	X-3167-825-1	o	KNOB ASSY (P), VOL
6	X-3678-708-3	s	FOOT,ASSY
7	⚠ 1-468-549-11	s	REGULATOR, SWITCHING
8	1-763-423-11	s	MOTOR, FAN
9	1-960-769-11	o	HARNESS, SUB (DC-POWER1)
10	1-960-770-11	o	HARNESS, SUB (DC-POWER2)
11	3-628-805-01	o	PLATE,SIDE
12	3-650-537-00	o	WASHER (PLA)
13	3-703-108-01	s	SCREW +BV 3X6 S TIGHT
14	3-733-690-01	s	SCREW +B 4X6 (ST)

Key Chassis and Boards

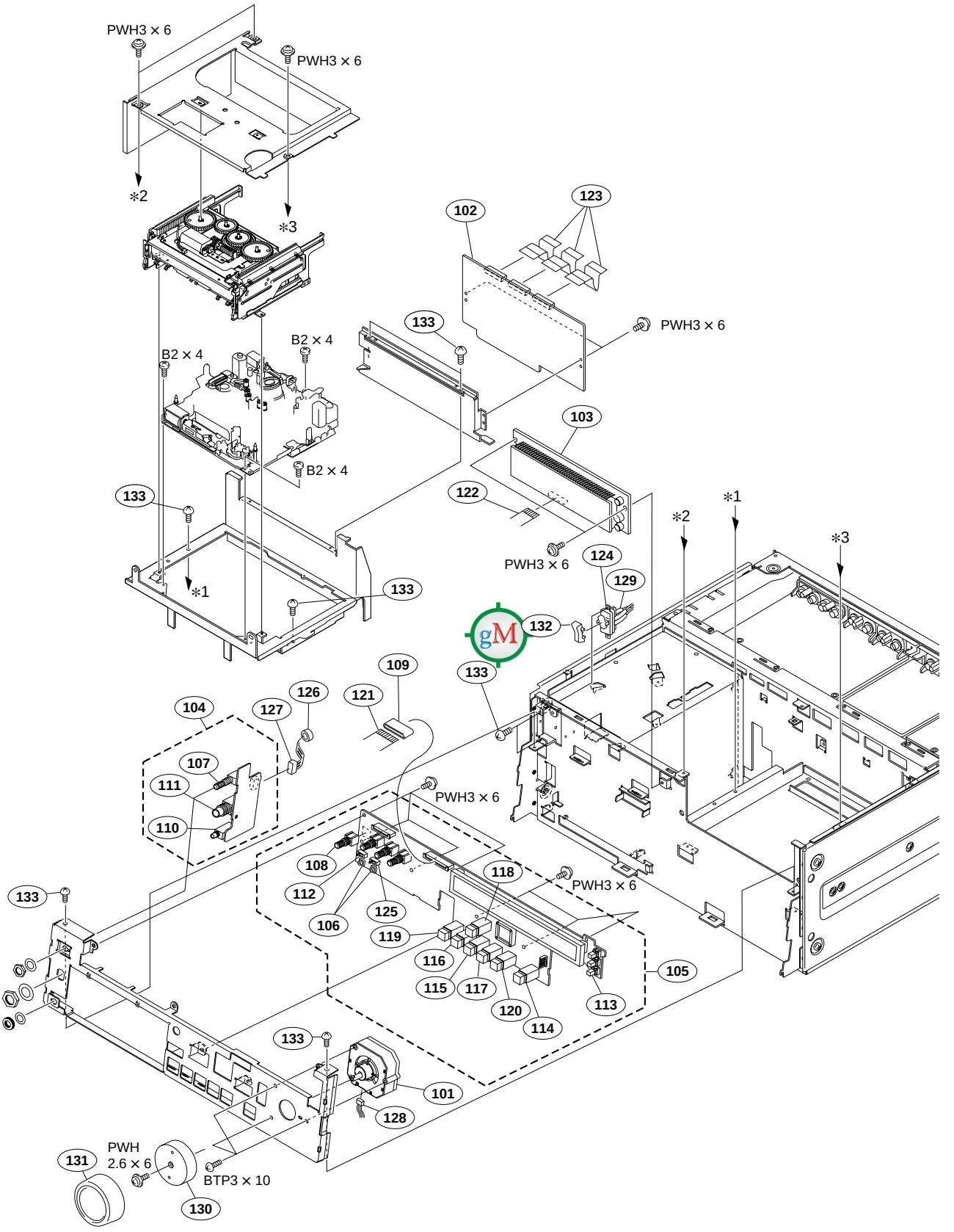

No.		Part No.	SP	Description
101		A-8323-665-C	s	DIAL ASSY, SEARCH
102		A-8326-496-A	o	MOUNTED CIRCUIT BOARD, RP-120 (for DSR-1800/P)
		A-8326-475-A	o	MOUNTED CIRCUIT BOARD, PRE-45 (for DSR-1600/P)
103		A-8326-507-A	o	MOUNTED CIRCUIT BOARD, DY-16
104		A-8326-508-A	o	MOUNTED CIRCUIT BOARD, HP-108
105		A-8326-510-A	o	MOUNTED CIRCUIT BOARD, KY-484 (for DSR-1800/P)
106		A-8326-512-A	o	MOUNTED CIRCUIT BOARD, KY-484A (for DSR-1600/P)
106		1-237-695-11	s	RESISTOR,VAR,CARBON 5K
107		1-241-577-11	s	VAR, CARBON 20K/20K
108		1-241-874-11	s	RES, VAR, CARBON 10K
109		1-469-854-11	s	CORE,FERRITE
110		1-507-743-21	s	JACK,STEREO MINI
111		1-565-326-12	s	JACK, LARGE TYPE (6.3MM)
112		1-571-427-11	s	SWITCH,SLIDE (1-1-2)
113		1-572-827-11	s	SWITCH, PUSH
114		1-692-890-11	s	SWITCH, TACTILE
115		1-692-890-21	s	SWITCH, TACTILE (WITH LIGHT)
116		1-692-890-31	s	SWITCH, TACTILE (WITH LIGHT)
117		1-692-890-41	s	SWITCH, TACTILE (WITH LIGHT)
118		1-692-891-21	s	SWITCH, TACTILE (WITH LIGHT)
119		1-692-892-11	s	SWITCH, TACTILE (WITH LIGHT)
120		1-692-892-21	s	SWITCH, TACTILE (WITH LIGHT)
121		1-757-295-11	o	WIRE, FLAT TYPE (30 CORE)
122		1-757-297-11	o	WIRE, FLAT TYPE (20 CORE)
123		1-757-300-11	o	CABLE, FLEXIBLE FLAT (45 CORE)
124	⚠	1-762-953-11	s	SWITCH, POWER
125		1-771-122-11	s	SWITCH, SLIDE
126		1-795-071-11	s	CORE,FERRITE
127		1-960-766-11	o	HARNESS, SUB (MB-HP2)
128		1-960-768-11	o	HARNESS, SUB (JOG-KY)
129		1-960-771-11	o	HARNESS (WITH ACSW)
130		3-623-384-02	s	KNOB,DIAL
131		3-623-385-03	s	COVER,DIAL
132		3-688-814-31	s	CAP, SWITCH
133		3-703-108-01	s	SCREW +BV 3X6 S TIGHT

Cassette Compartment Assembly

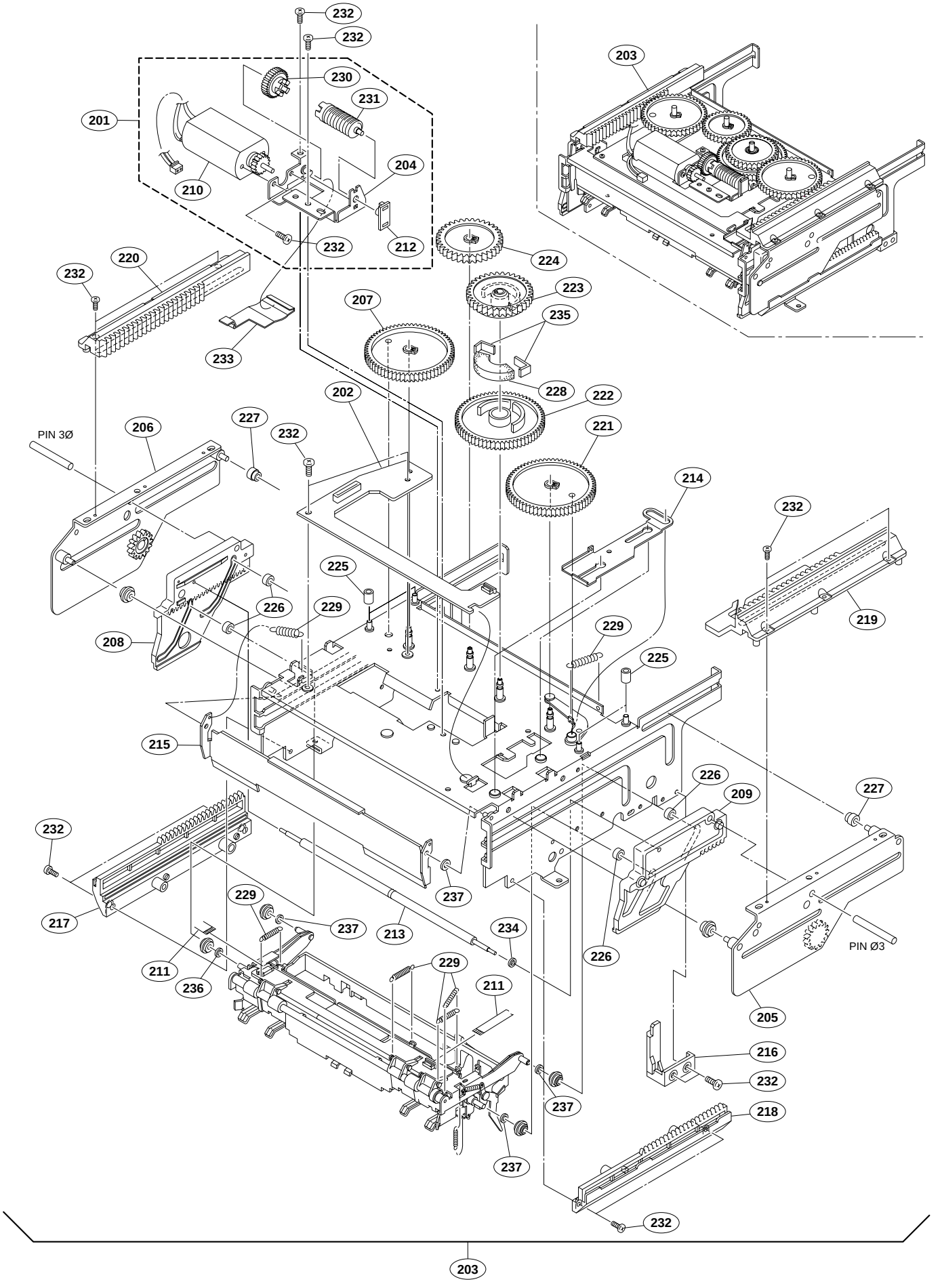

No.	Part No.	SP	Description
201	A-8279-216-D	o	GEAR ASSY,MOTOR
202	A-8323-497-A	o	MOUNTED CIRCUIT BOARD, CC-83
203	A-8324-829-A	s	CASSETTE COMPARTMENT ASSY
204	X-3605-643-2	o	BRACKET ASSY,MOTOR
205	X-3605-645-1	o	PLATE AR ASSY,RACK
206	X-3605-646-1	o	PLATE AL ASSY,RACK
207	X-3605-647-1	o	GEAR(L) ASSY,DRIVING
208	X-3605-648-2	o	RACK BML ASSY
209	X-3605-649-2	o	RACK BMR ASSY
210	X-3605-661-2	s	MOTOR ASSY
211	1-718-102-11	o	PRINTED WIRING BOARD, ZZ-1137
212	3-623-426-01	o	BEARING
213	3-623-576-03	o	SHAFT,LIMIT
214	3-623-577-01	o	SLIDER,TS
215	3-623-578-03	o	LID,TS
216	3-623-579-01	o	SLIDER,LID
217	3-623-580-03	o	RACK CL
218	3-623-581-03	o	RACK CR
219	3-623-582-02	o	RACK AR
220	3-623-583-02	o	RACK AL
221	3-623-584-02	o	GEAR(R),DRIVING
222	3-623-585-03	o	WHEEL,WORM
223	3-623-586-02	o	GEAR,LIMITER
224	3-623-587-01	o	GEAR,RELAY
225	3-623-588-01	o	ROLLER,FT
226	3-623-589-01	o	ROLLER ,ST
227	3-623-590-01	o	ROLLER,AP
228	3-623-591-02	o	RUBBER,LIMITER
229	3-623-592-01	s	SPRING,EXTENSION
230	3-623-659-01	o	GEAR B
231	3-623-660-02	o	GEAR,WORM
232	3-624-231-01	s	SCREW M2,SPECIAL
233	3-625-807-01	o	G COVER
234	3-626-802-01	o	RING(5.5X2.7X1.4),O
235	3-626-803-01	o	PLATE,LIMITER
236	3-701-437-11	s	WASHER PLASTIC (2.1X4X0.25)
237	3-701-437-21	s	WASHER,PLASTIC (2.1X0.5)

Gears and SE-521 Board

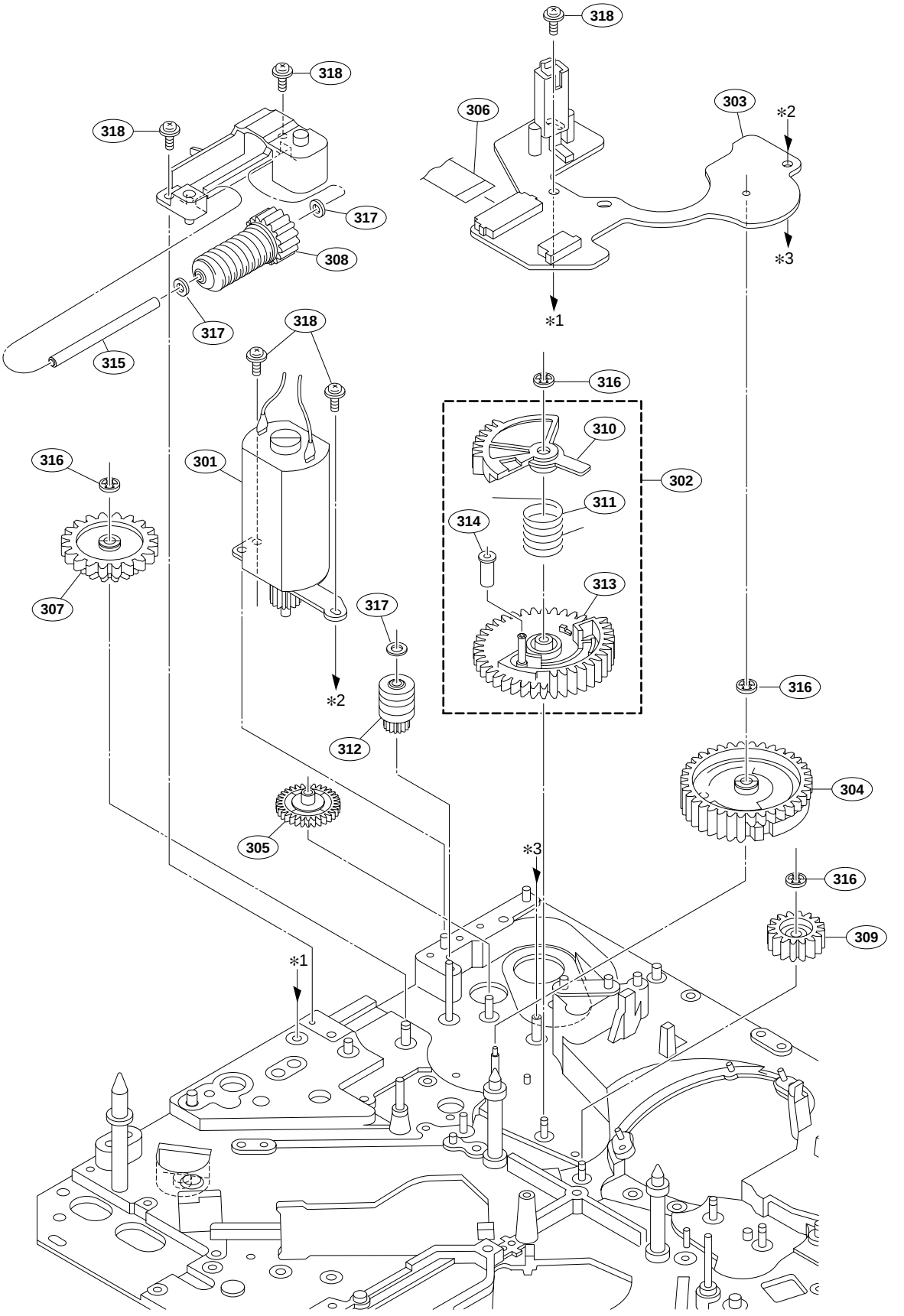

http://getMANUAL.com

No.	Part No.	SP	Description
301	A-8279-202-A	s	MOTOR ASSY,LD
302	A-8279-205-B	o	GEAR ASSY,NO.3
303	A-8323-518-A	s	MOUNTED CIRCUIT BOARD, SE-521
304	X-3604-970-3	s	GEAR ASSY,MODE
305	X-3605-638-1	o	GEAR ASSY,FG
306	1-791-714-11	o	CABLE, FLEXIBLE FLAT (15CORE)
307	3-614-479-02	o	GEAR, NO.1
308	3-614-481-02	o	WORM(2)
309	3-614-485-01	o	NO.4 GEAR
310	3-614-570-03	o	GEAR,LIMITTER,TR
311	3-614-663-02	s	SPRING,TR LIMITTER
312	3-623-451-01	o	GEAR,WORM,LD
313	3-623-534-02	o	NO.3 GEAR
314	3-623-535-01	o	SLEEVE
315	3-623-702-01	o	SHAFT,WORM
316	3-669-465-01	s	WASHER(1.5), STOPPER (PA)
317	3-701-437-01	s	WASHER PLASTIC (2.1X0.14)
318	3-729-013-41	s	SCREW(M1.4X3.5),WASHERHEAD(+P)

Tension Regurator and head Cleaner Assembly

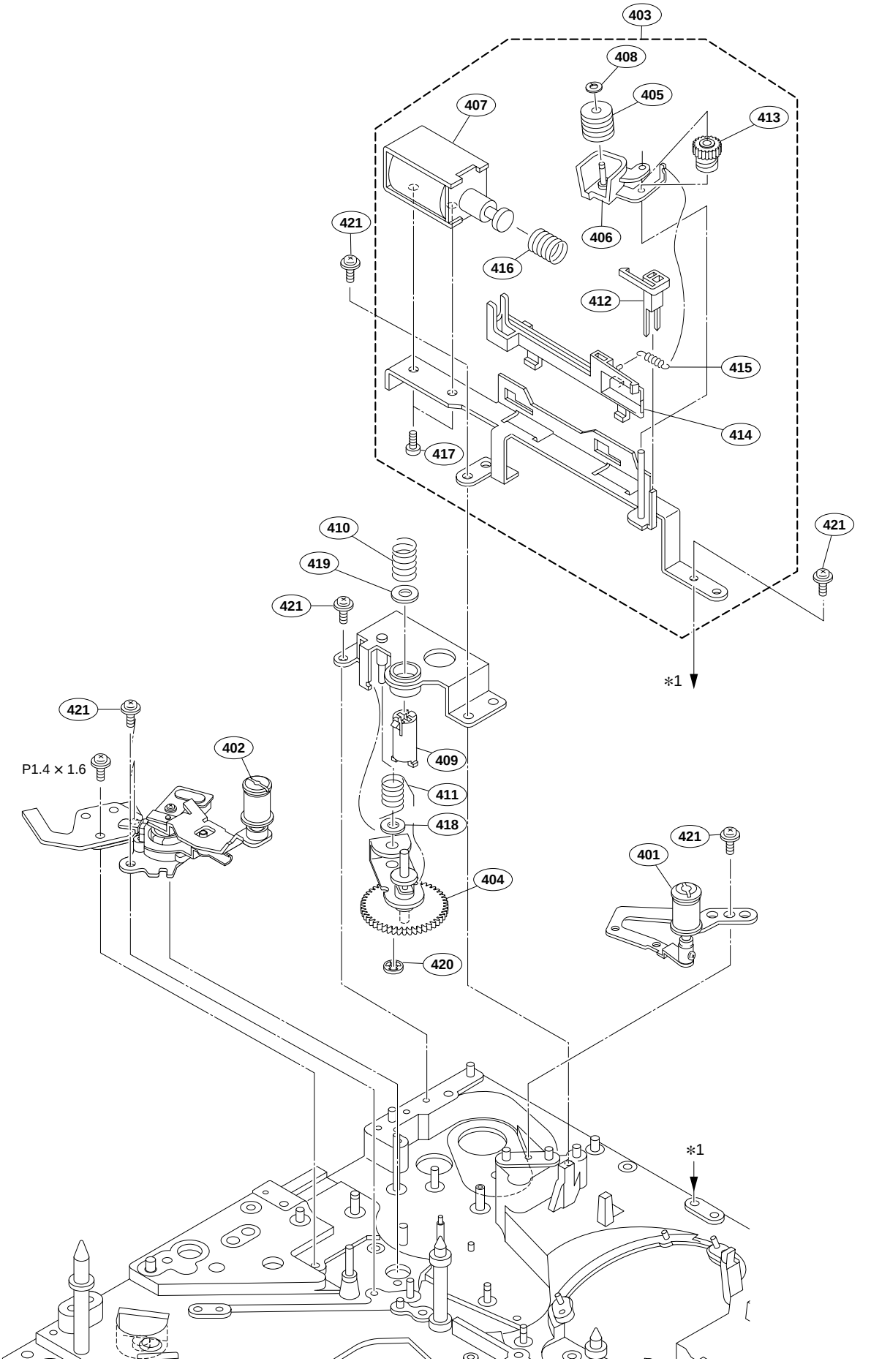

No.	Part No.	SP	Description
401	A-8279-399-A	o	ARM ASSY,TG1
402	A-8323-655-B	s	REGULATOR ASSY, TENSION
403	A-8323-782-B	o	CLEANER ASSY, HEAD
404	X-3605-620-2	o	GEAR ASSY,ME
405	X-3605-665-1	s	ROLLER ASSY,HC
406	X-3605-898-1	s	ARM ASSY,ROLLER
407	1-454-942-11	s	SOLENOID, PLUNGER
408	3-349-859-31	s	WASHER
409	3-623-497-01	o	COVER,ME
410	3-623-498-01	s	SPRING(ME),COMPRESSION
411	3-623-499-02	s	SPRING,ME
412	3-623-771-01	o	HOLDER,CAM,HC
413	3-623-774-01	o	ROLLER,CAM,HC
414	3-623-775-01	o	SLIDER,HC
415	3-623-780-01	o	SPRING,PRESS,HC
416	3-623-781-02	o	SPRING,RELEASE,HC
417	3-669-607-01	s	SCREW +PSW (SMALL ROUND)2.6
418	3-701-439-01	s	WASHER PLASTIC (3.1X0.13)
419	3-701-443-11	s	WASHER PLASTIC (5.2X0.25)
420	3-726-829-01	s	WASHER,STOPPER (PLA)
421	3-729-013-41	s	SCREW(M1.4X3.5),WASHERHEAD(+P)

Drum and Rail Assembly

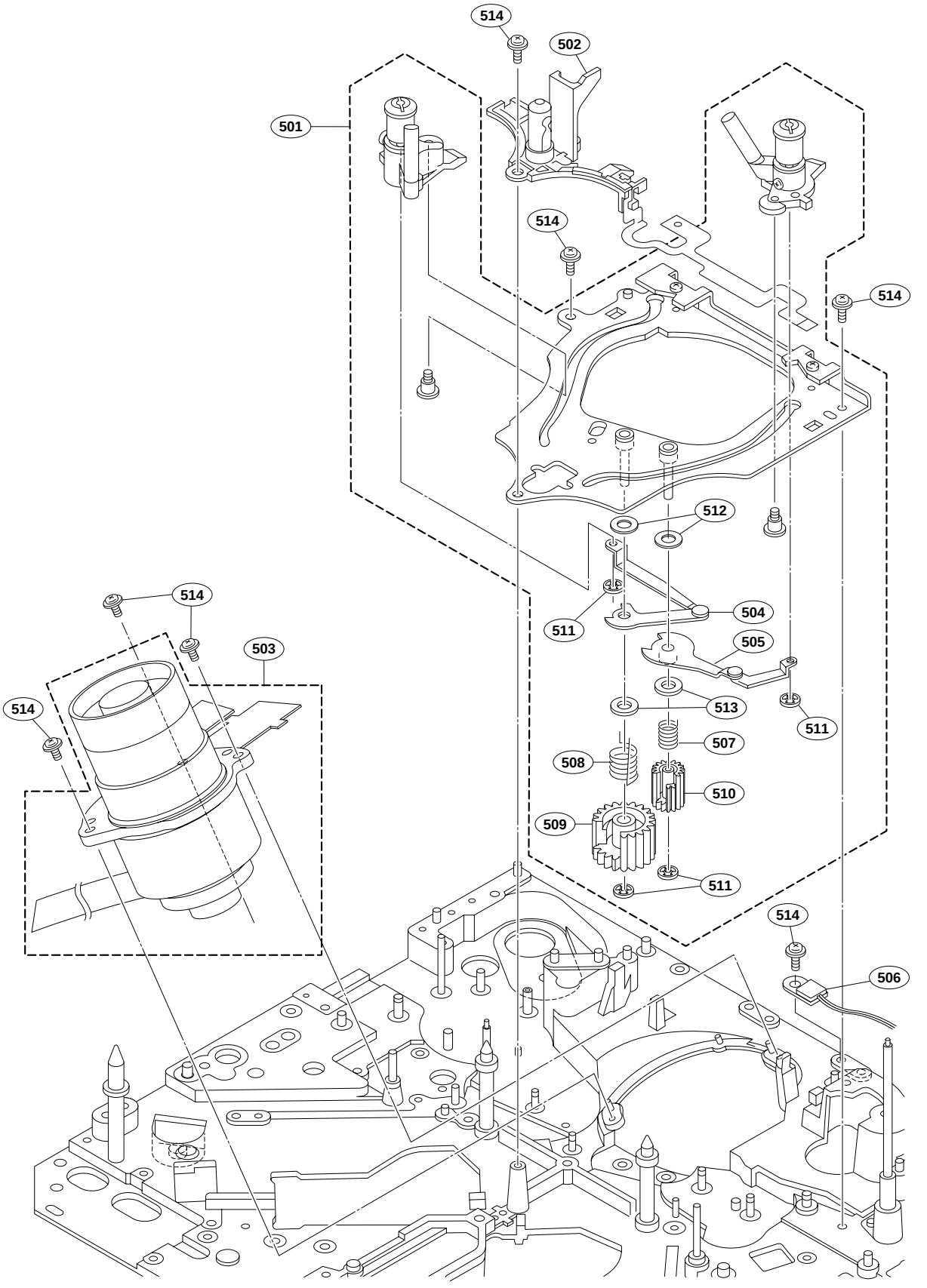

No.	Part No.	SP	Description
501	A-8320-101-C	o	RAIL ASSY
502	A-8323-662-A	s	HOLDER ASSY, LED
503	A-8327-026-A	s	DRUM ASSY, DEH-19A-R(for DSR-1800/P)
	A-8327-027-A	s	DRUM ASSY, DEH-20A-R(for DSR-1600/P)
504	X-3604-946-3	o	LINK ASSY(L),THREADING
505	X-3604-947-2	o	LINK(R)ASSY,THREADING
506	1-803-490-11	s	SENSOR, DEW CONDENSATION
507	3-614-593-01	s	SPRING(R),LD
508	3-614-594-01	s	SPRING(L),LD
509	3-614-609-01	o	GEAR(L),THREADING
510	3-614-610-02	o	GEAR(R),THREADING
511	3-669-465-01	s	WASHER(1.5), STOPPER (PA)
512	3-701-438-11	s	WASHER PLASTIC (2.6X0.25)
513	3-701-441-21	s	WASHER PLASTIC (4.1X0.5)
514	3-729-013-41	s	SCREW(M1.4X3.5),WASHERHEAD(+P)

Pinch Solenoid and Limitter Assembly

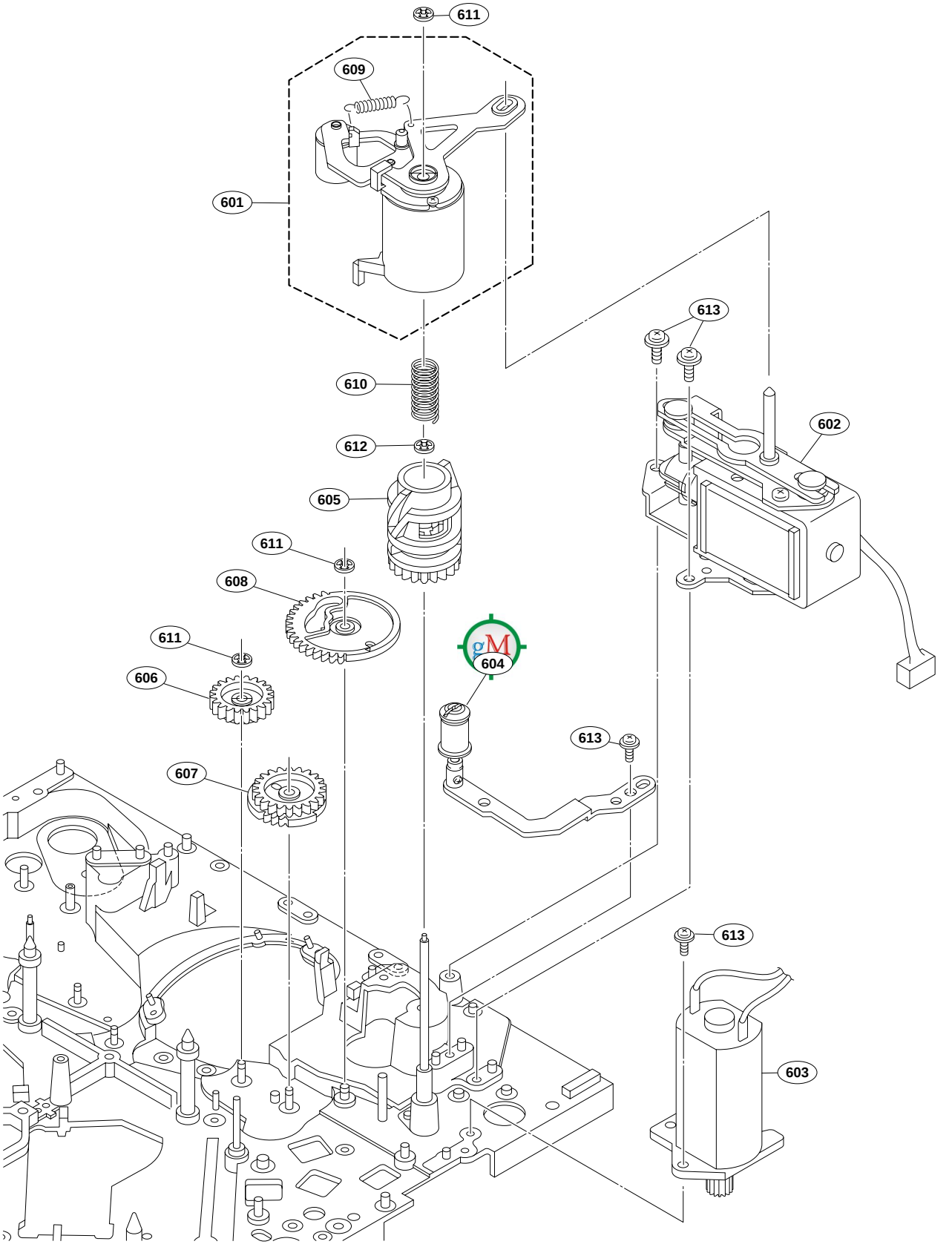

No.	Part No.	SP	Description
601	A-8279-201-B	s	LIMITTER ASSY,PINCH
602	A-8279-203-B	s	SOLENOID ASSY,PINCH
603	A-8279-204-A	s	MOTOR ASSY,RS
604	A-8279-400-A	o	ARM ASSY,TG8
605	3-614-478-01	o	CAM,ELEVATOR
606	3-614-484-01	o	NO.5 GEAR
607	3-614-548-02	o	NO.6 GEAR
608	3-614-661-01	o	NO.7 GEAR
609	3-623-508-01	s	SPRING,PRESS,PINCH
610	3-624-818-01	s	SPRING,PL
611	3-669-465-01	s	WASHER(1.5), STOPPER (PA)
612	3-669-596-01	s	WASHER,2.3 (PLA)
613	3-729-013-41	s	SCREW(M1.4X3.5),WASHERHEAD(+P)

Mic Assembly and T Reel, Capstan Motors

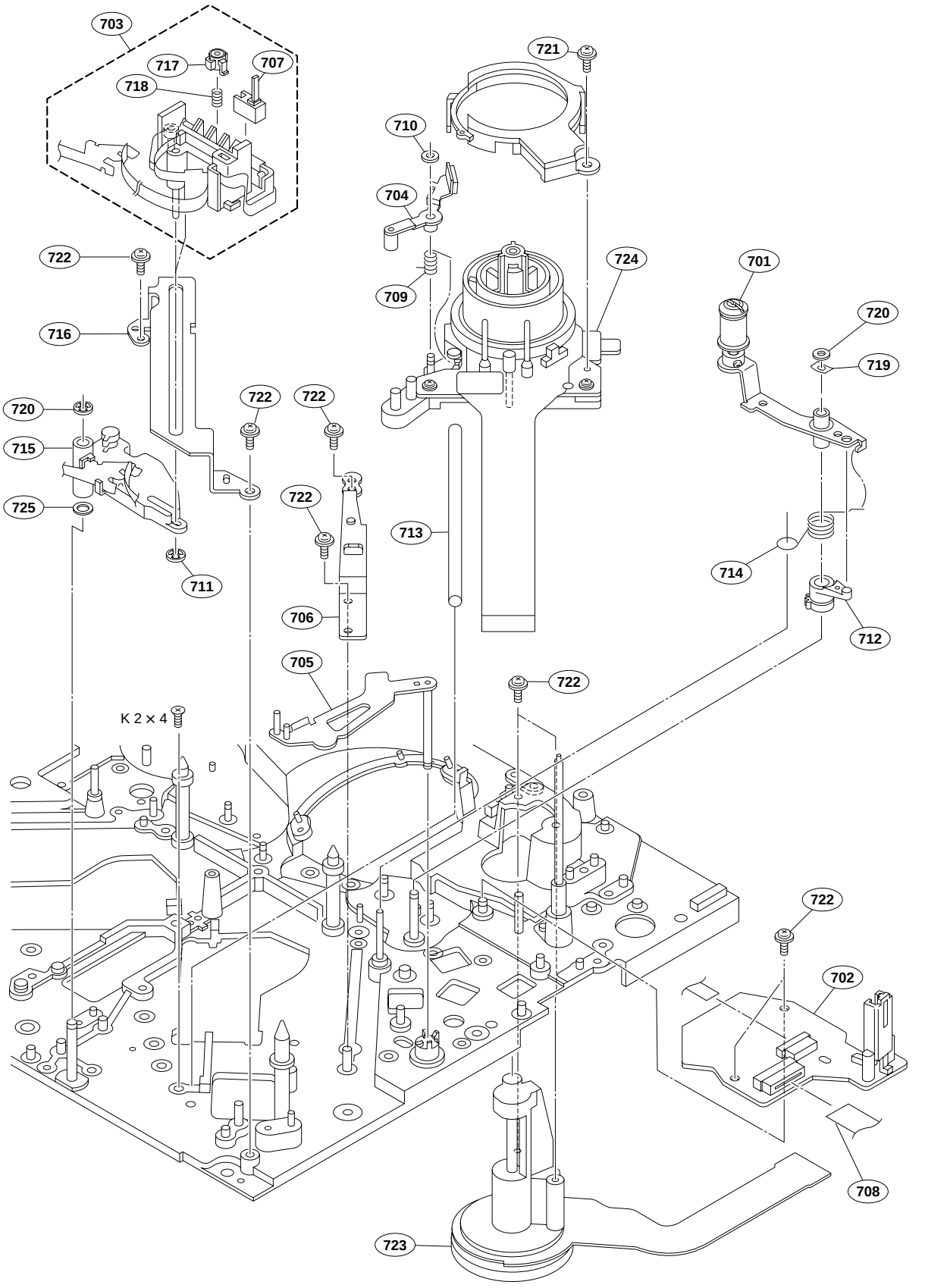

No.	Part No.	SP	Description
701	A-8279-026-C	o	ARM ASSY,T DRAWER
702	A-8323-519-A	s	MOUNTED CIRCUIT BOARD, SE-522
703	A-8323-659-A	s	HOLDER SUB ASSY, MIC
704	A-8324-480-A	s	ASSY(T),BRAKE
705	X-3605-630-2	o	STOPPER(M) ASSY,MIC
706	X-3605-635-1	o	RETAINER(T1) ASSY,RMP
707	1-762-551-11	s	SWITCH, PUSH
708	1-791-714-11	o	CABLE, FLEXIBLE FLAT (15CORE)
709	3-203-453-01	s	SPRING(T), BRAKE
710	3-321-813-01	s	WASHER, COTTER POLYETHYLENE
711	3-559-408-11	s	WASHER,POLYETHYLENE,DIA.1.2
712	3-614-549-03	o	T GEAR
713	3-623-447-01	o	SHAFT(T),SLID
714	3-623-455-01	s	SPRING,T
715	3-623-475-02	o	ARM(1),MIC
716	3-623-476-02	o	RAIL,MIC
717	3-623-477-02	o	PLATE,CN PUSH
718	3-623-478-01	s	SPRING,CN COMPRESSION
719	3-625-948-01	o	WASHER,SPRING
720	3-669-465-01	s	WASHER(1.5), STOPPER (PA)
721	3-703-502-31	s	SCREW, M1.4X3
722	3-729-013-41	s	SCREW(M1.4X3.5),WASHERHEAD(+P)
723	8-835-619-51	s	MOTOR, DC SCD16A/J-RP
724	8-835-636-51	s	MOTOR, DC SRD14A/J-RP
725	3-701-437-01	s	WASHER PLASTIC (2.1X0.14)

RLR Assembly and S Reel Motor

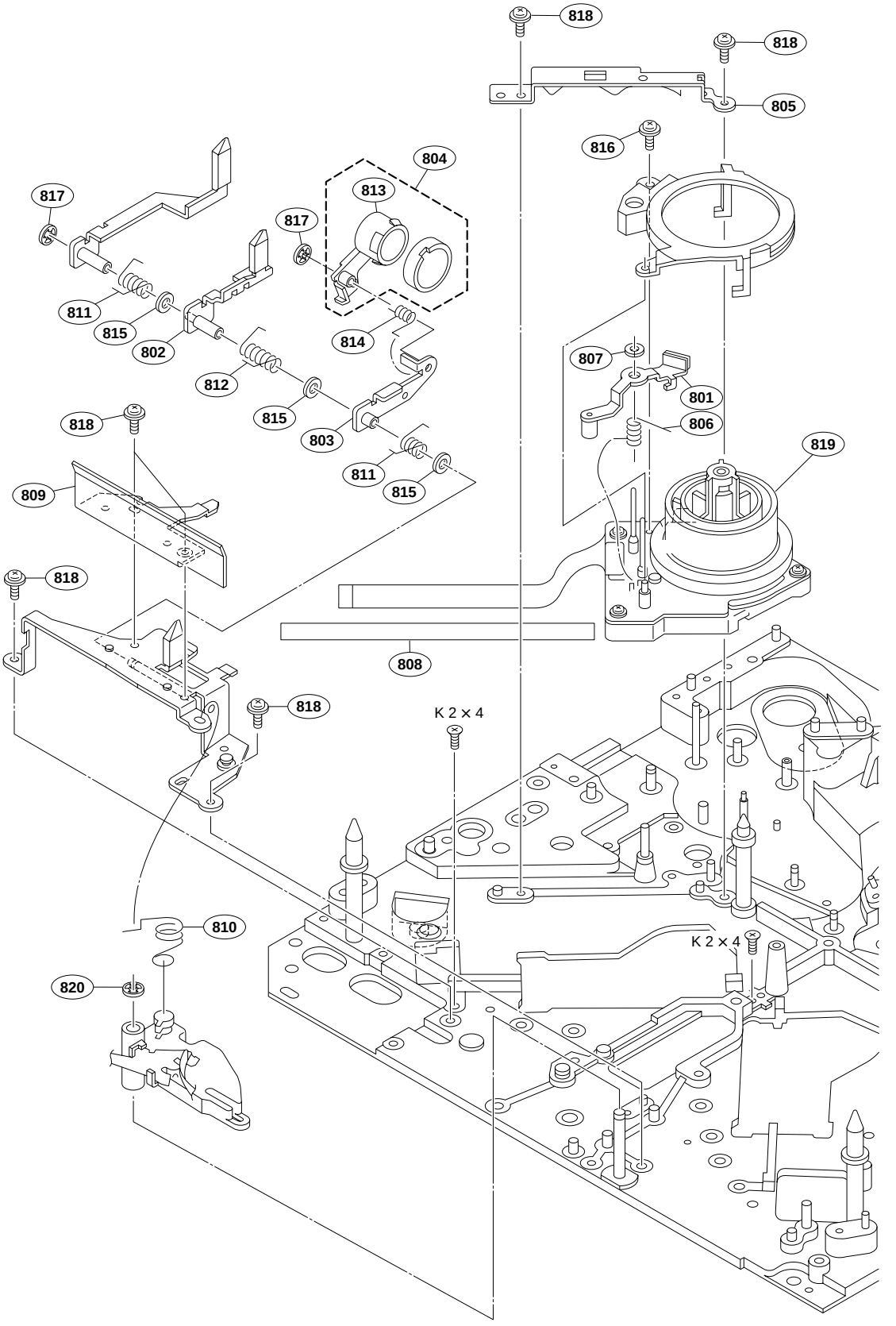

http://getMANUAL.com

No.	Part No.	SP	Description
801	A-8324-481-A	s	ASSY(S),BRAKE
802	X-3605-616-4	o	ARM(M) ASSY,RLR
803	X-3605-617-2	o	ARM ASSY,S PUSH
804	X-3605-619-2	o	ROLLER ASSY,S
805	X-3605-633-1	o	RETAINER(S1) ASSY,RMP
806	3-203-452-01	s	SPRING(S), BRAKE
807	3-321-813-01	s	WASHER, COTTER POLYETHYLENE
808	3-623-446-01	o	SHAFT(S),SLID
809	3-623-449-02	o	PLATE,L PUSH
810	3-623-450-01	s	SPRING,MIC
811	3-623-483-01	s	SPRING(S2),RLR
812	3-623-484-01	s	SPRING(M1),RLR
813	3-623-495-02	o	HOLDER,S ROLLER
814	3-623-575-01	s	SPRING,S PUSH
815	3-701-436-01	s	WASHER (1.6) (PLASTIC)
816	3-703-502-01	s	SCREW (STEEL)
817	3-726-829-01	s	WASHER,STOPPER (PLA)
818	3-729-013-41	s	SCREW(M1.4X3.5),WASHERHEAD(+P)
819	8-835-637-51	s	MOTOR, DC SRD15A/J-RP
820	3-669-465-01	s	WASHER (1.5), STOPPER

Brake Assembly

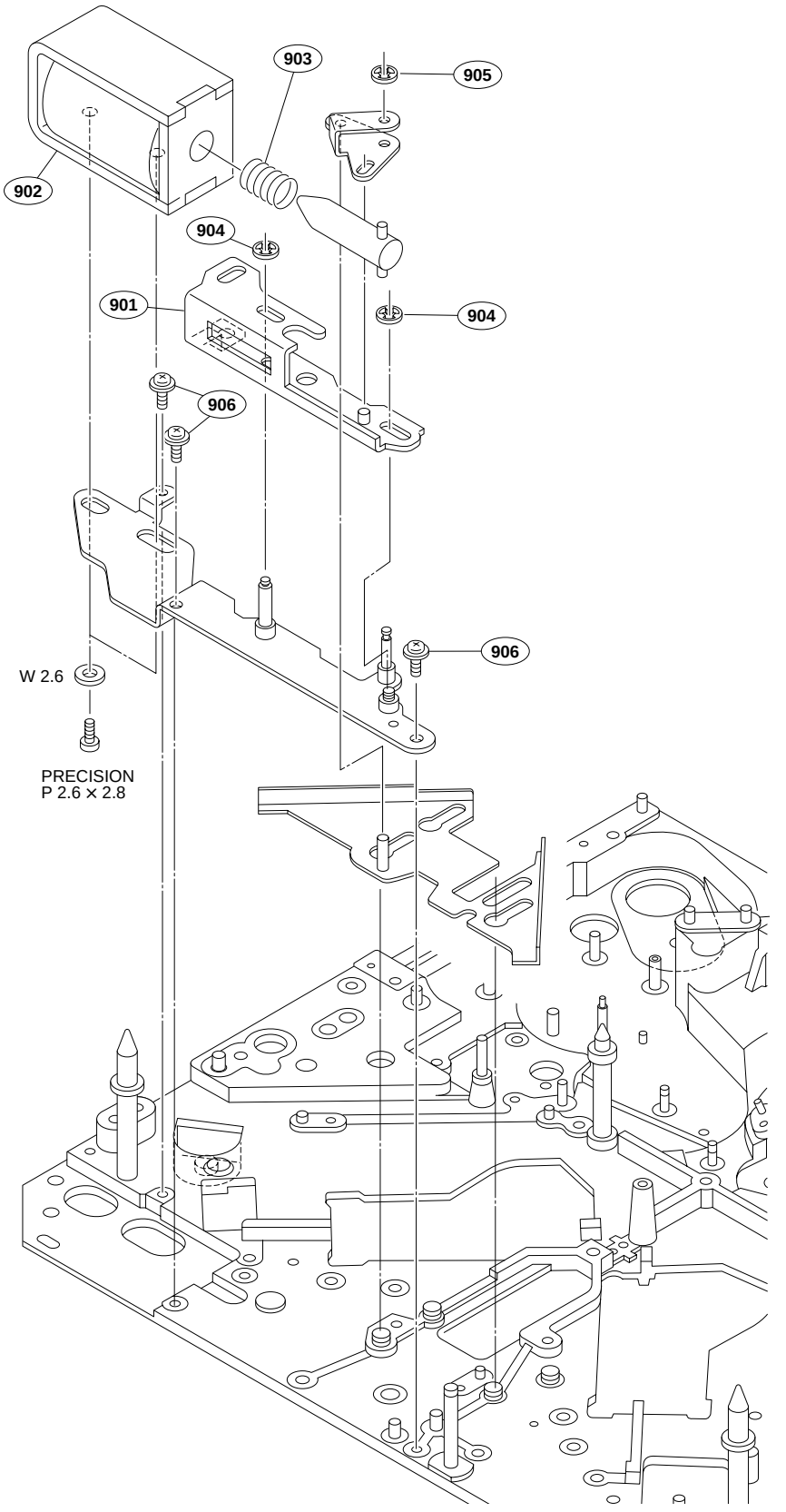

No.	Part No.	SP	Description
901	X-3605-625-1	o	SLIDER ASSY,BR
902	1-454-930-11	s	SOLENOID, PLUNGER
903	3-623-520-01	s	SPRING,COMPRESSION
904	3-669-465-01	s	WASHER(1.5), STOPPER (PA)
905	3-726-829-01	s	WASHER,STOPPER (PLA)
906	3-729-013-41	s	SCREW(M1.4X3.5),WASHERHEAD(+P)

Gears and MIC Drive Assembly

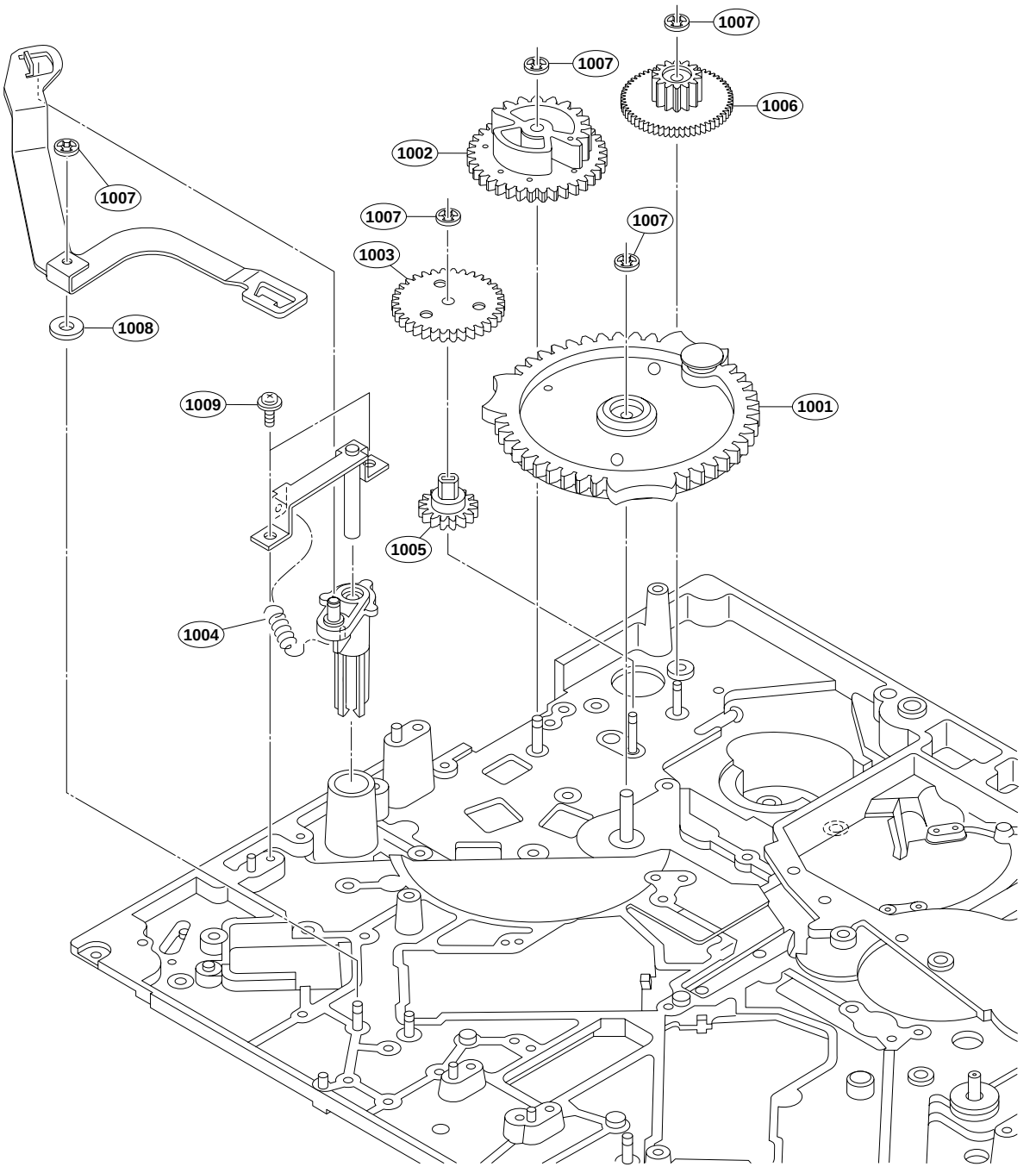

No.	Part No.	SP	Description
1001	X-3605-631-1	o	GEAR ASSY,R SHIFT
1002	X-3605-636-1	o	GEAR(C) ASSY
1003	3-623-444-01	o	GEAR B1
1004	3-623-445-02	s	SPRING(MIC),EXTENSION
1005	3-623-453-01	o	GEAR B
1006	3-623-454-02	o	GEAR A
1007	3-669-465-01	s	WASHER(1.5), STOPPER (PA)
1008	3-701-437-01	s	WASHER PLASTIC (2.1X0.14)
1009	3-729-013-41	s	SCREW(M1.4X3.5),WASHERHEAD(+P)

M Stopper (T), (S) Assembly

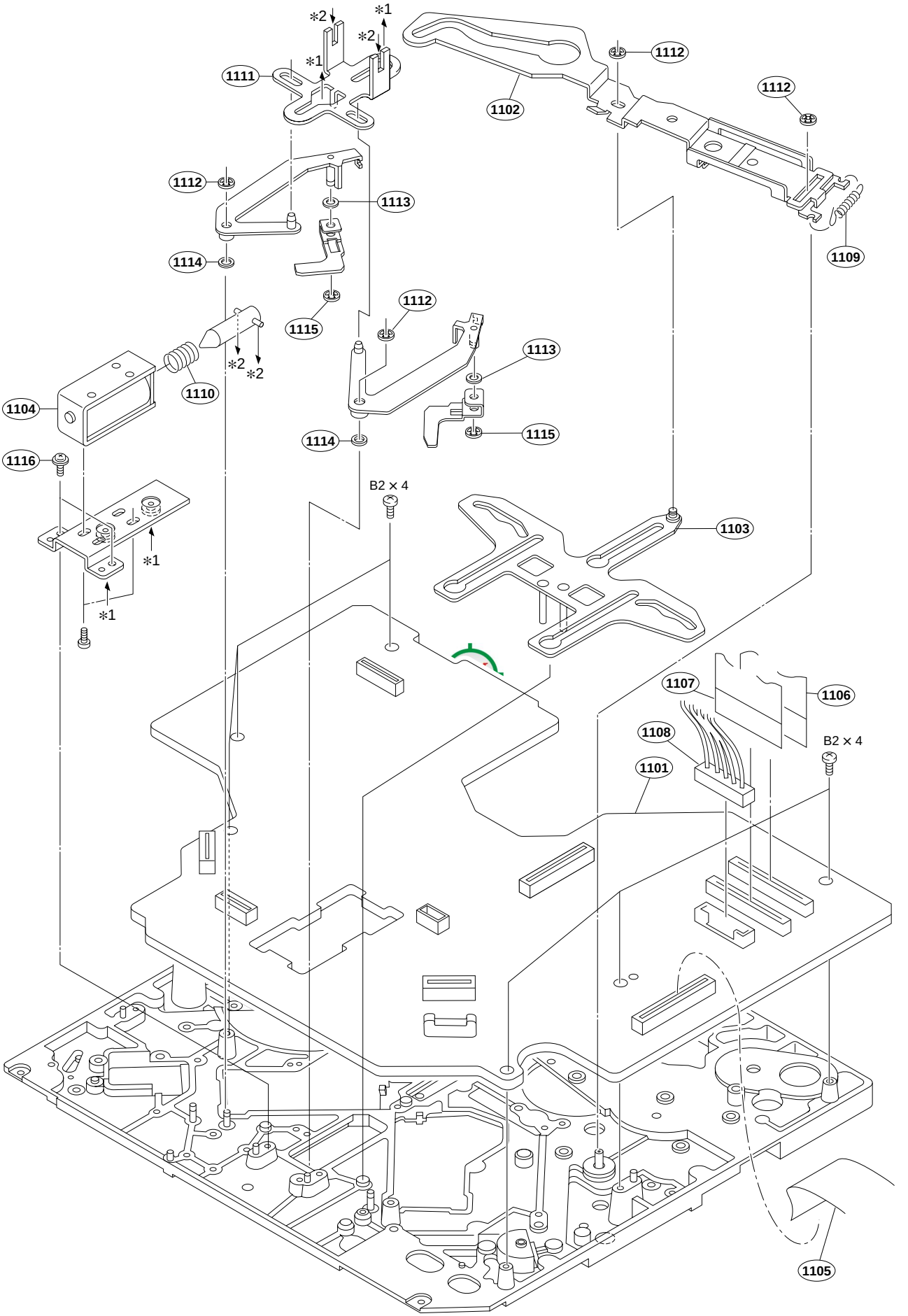

No.	Part No.	SP	Description
1101	A-8326-491-A	o	MOUNTED CIRCUIT BOARD, DR-428
1102	X-3605-610-1	o	ARM(A) ASSY,RS
1103	X-3605-637-2	o	PLATE(A) ASSY,RS
1104	1-454-932-11	s	SOLENOID, PLUNGER
1105	1-757-296-11	o	WIRE, FLAT TYPE (18 CORE)
1106	1-757-298-11	o	CABLE, FLEXIBLE FLAT (45 CORE)
1107	1-757-299-11	o	CABLE, FLEXIBLE FLAT (45 CORE)
1108	1-960-767-11	o	HARNESS, SUB (DR-MB3)
1109	3-614-541-01	s	SPRING,EXTENSION
1110	3-614-543-01	o	SPRING,COMPRESSION
1111	3-629-490-01	o	SLIDER,MS
1112	3-669-465-01	s	WASHER(1.5), STOPPER (PA)
1113	3-701-436-01	s	WASHER (1.6) (PLASTIC)
1114	3-701-437-01	s	WASHER PLASTIC (2.1X0.14)
1115	3-726-829-01	s	WASHER,STOPPER (PLA)
1116	3-729-013-41	s	SCREW(M1.4X3.5),WASHERHEAD(+P)

Rear Panel (1/2)

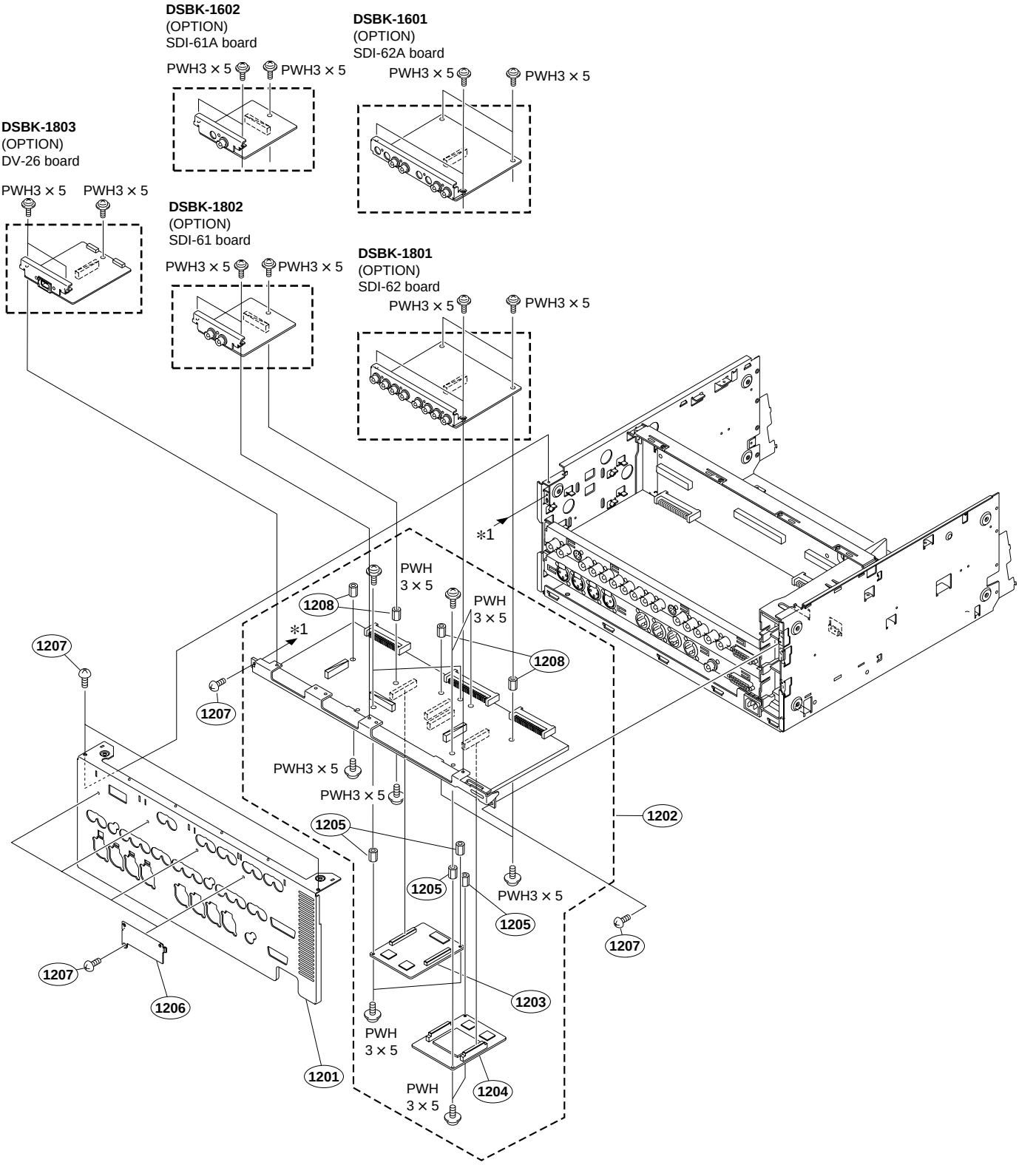

No.	Part No.	SP	Description
1201	A-8279-509-A	o	PANEL(UC) ASSY,REAR(DSR-1800)
	3-623-794-22	o	PANEL,REAR(DSR-1800 (J))
	A-8279-507-A	o	PANEL(CE) ASSY,REAR(DSR-1800P)
	A-8279-510-A	o	PANEL(UC) ASSY,REAR(DSR-1600)
	A-8279-511-A	o	PANEL(J) ASSY,REAR(DSR-1600)
	A-8279-508-A	o	PANEL(CE) ASSY,REAR(DSR-1600P)
1202	A-8326-489-A	o	MOUNTED CIRCUIT BOARD, DPR-175
1203	A-8326-492-A	o	MOUNTED CIRCUIT BOARD,FU-78R
1204	A-8326-493-A	o	MOUNTED CIRCUIT BOARD,FU-78P
1205	2-280-622-11	o	SUPPORT(M3),HEXAGON
1206	3-628-795-02	o	BRACKET BRANK
1207	3-703-108-01	s	SCREW +BV 3X6 S TIGHT
1208	4-360-293-00	o	SPACER,BOSS

Rear Panel (2/2)

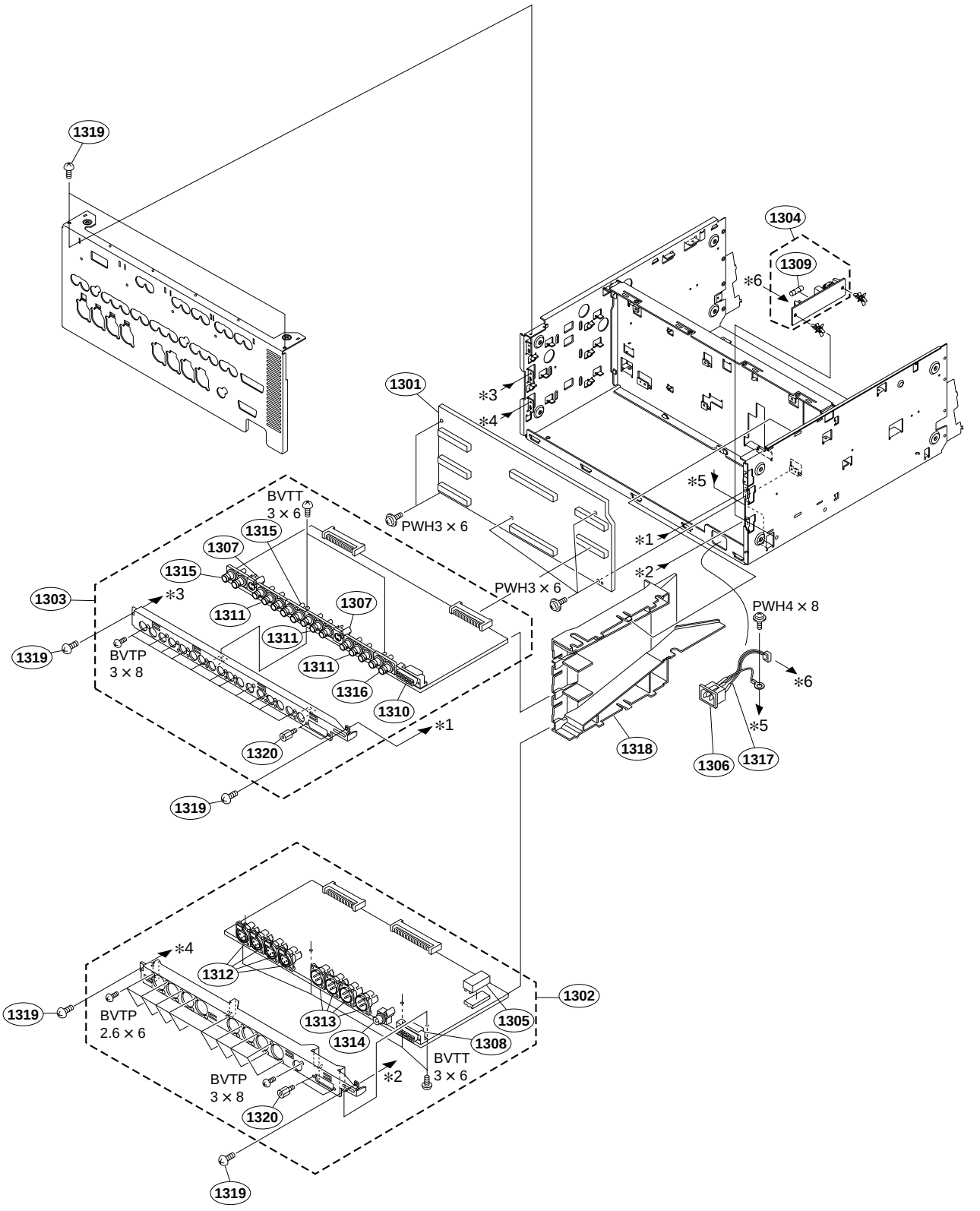

http://getMANUAL.com

No.	Part No.	SP	Description
1301	A-8326-494-A	o	MOUNTED CIRCUIT BOARD, MB-920(for DSR-1800/P)
	A-8326-521-A	o	MOUNTED CIRCUIT BOARD, MB-927(for DSR-1600/P)
1302	A-8326-498-A	o	MOUNTED CIRCUIT BOARD, SSP-24{for DSR-1800 (UC,CE)}
	A-8326-500-A	o	MOUNTED CIRCUIT BOARD, SSP-24A{for DSR-1800 (J)}
	A-8326-514-A	o	MOUNTED CIRCUIT BOARD, IF-820{for DSR-1600 (UC)}
	A-8326-518-A	o	MOUNTED CIRCUIT BOARD, IF-820A{for DSR-1600 (J)}
	A-8326-516-A	o	MOUNTED CIRCUIT BOARD, IF-820P{for DSR-1600P (CE)}
1303	A-8326-502-A	o	MOUNTED CIRCUIT BOARD, VPR-71(for DSR-1800)
	A-8326-504-A	o	MOUNTED CIRCUIT BOARD, VPR-71P(for DSR-1800P)
1304	A-8326-505-A	o	MOUNTED CIRCUIT BOARD, AC-212
1305 ⚠	1-528-749-11	s	BATTERY,MOLD TYPE (LITHIUM)
1306 ⚠	1-540-051-12	s	INLET, AC
1307	1-569-587-31	s	CONNECTOR, DIN
1308	1-573-566-11	s	CONNECTOR (DELC-J9SAF-1029)
1309 ⚠	1-576-230-11	s	FUSE (H.B.C.)
1310	1-764-117-21	s	PLUG,(D) SUB CONNECTOR 15P
1311	1-774-965-11	o	CONNECTOR, BNC (RECEPTACLE)
1312	1-794-097-11	s	CONNECTOR, ROUND TYPE (for DSR-1800 (J))/1-794-099-11 (for DSR-1800/P (UC,CE))
1313	1-794-099-11	s	CONNECTOR, ROUND TYPE (for DSR-1800/P (UC,CE))/1-794-097-11 (for DSR-1800 (J))
1314	1-794-820-11	s	JACK, PIN (1P)
1315	1-794-872-11	o	CONNECTOR, BNC 2P
1316	1-794-873-11	o	CONNECTOR, BNC 2P
1317	1-960-772-11	o	HARNESS (WITH INLET)
1318	3-628-798-01	o	DUCT
1319	3-703-108-01	s	SCREW +BV 3X6 S TIGHT
1320	4-886-821-11	s	SCREW,M3X6 CASE (SILVER)

Screws and Washers

Part No.	SP	Description
7-621-591-00	s	SCREW +K 2X4
7-621-772-18	s	SCREW +B M2X4
7-624-105-04	s	RING,E2.3
7-624-106-04	s	RING,RETAINING,E (3MM)
7-624-108-04	s	RING,RETAINING;E-TYPE 4
7-626-302-21	s	SPRING PIN 2.5X12
7-627-551-47	s	SCREW +P1.4X1.4
7-627-553-17	s	SCREW +P2X2
7-627-553-37	s	SCREW,PRECISION +P 2X3
7-627-556-07	s	SCREW +P2.6X2.8
7-627-556-08	s	SCREW,PRECISION +P 2.6X2.8
7-682-547-04	s	SCREW +B3X6
7-682-902-21	s	SCREW +PWH 2.6X6
7-682-903-01	s	SCREW +PWH 3X5
7-682-903-11	s	SCREW +PWH 3X6
7-682-949-01	s	SCREW +PSW 3X10
7-682-955-09	s	SCREW +PSW 3X30
7-682-961-01	s	SCREW +PSW 4X8
7-685-146-29	s	SCREW +PTP 3X8
7-685-547-19	s	SCREW +BTP 3X10
7-685-646-79	s	SCREW +BVTP 3X8
7-685-862-09	s	SCREW,+BVTP 2.6X6
7-685-871-01	s	SCREW BVTT 3X6
7-688-002-03	s	WASHER 2.6(SMALL)

12-3. Electrical Parts Lists

AC-212 BOARD

Ref. No. or Q'ty	Part No.	SP	Description
1pc	A-8326-505-A	o	MOUNTED CIRCUIT BOARD, AC-212
1pc	1-533-223-11	s	CLIP,FUSE
1pc	1-533-223-11	s	CLIP,FUSE
C1	⚠ 1-117-916-51	s	CAP, METALIZED FILM 0.22MF
CN1	1-691-960-11	o	PIN,CONNECTOR (PC BOARD) 3P
CN2	1-691-960-11	o	PIN,CONNECTOR (PC BOARD) 3P
F1	⚠ 1-576-230-11	s	FUSE (H.B.C.)
R1	⚠ 1-214-964-00	s	RESISTOR,METAL FILM 1M 1/4W
T1	⚠ 1-424-353-11	s	TRANSFORMER,LINE FILTER
VDR1	⚠ 1-801-446-11	s	VARISTOR TNR10V471K660

CC-83 BOARD

Ref. No. or Q'ty	Part No.	SP	Description
1pc	A-8323-497-A	o	MOUNTED CIRCUIT BOARD, CC-83
C1	1-164-156-11	s	CAPACITOR,CERAMIC 0.1MF/25V F
CN1	1-770-300-21	o	HOUSING, CONNECTOR 18P
CN2	1-793-720-11	o	CONNECTOR, FFC/FPC (ZIF) 10P
CN3	1-695-479-11	o	PIN, CONNECTOR (PC BOARD) 2P
PH1	8-719-988-15	s	PHOTO REFRECTOR PR-11-C
PH2	8-719-988-15	s	PHOTO REFRECTOR PR-11-C
PH3	8-719-988-15	s	PHOTO REFRECTOR PR-11-C

CC-84 BOARD

Ref. No. or Q'ty	Part No.	SP	Description
CN4	1-785-508-11	o	CONNECTOR, FFC/FPC (ZIF) 10P
CN5	1-770-896-11	s	CONNECTOR, FPC (ZIF) 8P
R1	1-216-825-11	s	RESISTOR,CHIP 2.2K 1/16W 1608
R2	1-216-833-11	s	RESISTOR,CHIP 10K 1/16W (1608)
R3	1-216-825-11	s	RESISTOR,CHIP 2.2K 1/16W 1608
R4	1-216-833-11	s	RESISTOR,CHIP 10K 1/16W (1608)
R5	1-216-825-11	s	RESISTOR,CHIP 2.2K 1/16W 1608
R6	1-216-833-11	s	RESISTOR,CHIP 10K 1/16W (1608)

CC-85 BOARD

Ref. No. or Q'ty	Part No.	SP	Description
CN6	1-770-896-11	s	CONNECTOR, FPC (ZIF) 8P
PH1	8-719-988-15	s	PHOTO REFRECTOR PR-11-C
PH2	8-719-988-15	s	PHOTO REFRECTOR PR-11-C
PH3	8-719-988-15	s	PHOTO REFRECTOR PR-11-C
PH4	8-719-988-15	s	PHOTO REFRECTOR PR-11-C
R1	1-216-821-11	s	RESISTOR,CHIP 1.0K 1/16W(1608)
R2	1-216-818-11	s	RESISTOR, CHIP 560 1/16W 1608

DPR-175 BOARD (for DSR-1800/P)

---

*1: Lot No.073 and higher
*2: Lot No.081 and higher

Ref. No. or Q'ty	Part No.	SP	Description
1pc	A-8326-489-A	o	MOUNTED CIRCUIT BOARD, DPR-175
4pcs	4-360-293-00	o	SPACER,BOSS
12pcs	7-682-903-01	s	SCREW +PWH 3X5(EP-FE/ZN/CM2)
4pcs	4-886-821-11	s	SCREW,M3X6 CASE (SILVER)
C1	1-164-156-11	s	CAPACITOR,CERAMIC 0.1MF/25V F
C2	1-164-156-11	s	CAPACITOR,CERAMIC 0.1MF/25V F
C3	1-128-393-11	s	CAPACITOR,ELECT 100MF/10V
C4	1-164-156-11	s	CAPACITOR,CERAMIC 0.1MF/25V F
C5	1-164-156-11	s	CAPACITOR,CERAMIC 0.1MF/25V F
C71	1-164-156-11	s	CAPACITOR,CERAMIC 0.1MF/25V F
C72	1-128-393-11	s	CAPACITOR,ELECT 100MF/10V
C73	1-128-393-11	s	CAPACITOR,ELECT 100MF/10V
C74	1-164-156-11	s	CAPACITOR,CERAMIC 0.1MF/25V F
C75	1-128-394-11	s	CAPACITOR,ELECT 220MF/10V
C76	1-164-156-11	s	CAPACITOR,CERAMIC 0.1MF/25V F
C77	1-164-156-11	s	CAPACITOR,CERAMIC 0.1MF/25V F
C78	1-164-156-11	s	CAPACITOR,CERAMIC 0.1MF/25V F
C79	1-164-156-11	s	CAPACITOR,CERAMIC 0.1MF/25V F
C80	1-164-156-11	s	CAPACITOR,CERAMIC 0.1MF/25V F
C81	1-164-156-11	s	CAPACITOR,CERAMIC 0.1MF/25V F
C82	1-164-156-11	s	CAPACITOR,CERAMIC 0.1MF/25V F
C83	1-164-156-11	s	CAPACITOR,CERAMIC 0.1MF/25V F
C84	1-164-156-11	s	CAPACITOR,CERAMIC 0.1MF/25V F
C101	1-164-156-11	s	CAPACITOR,CERAMIC 0.1MF/25V F
C102	1-164-156-11	s	CAPACITOR,CERAMIC 0.1MF/25V F
C103	1-128-393-11	s	CAPACITOR,ELECT 100MF/10V
C104	1-164-156-11	s	CAPACITOR,CERAMIC 0.1MF/25V F
C105	1-164-156-11	s	CAPACITOR,CERAMIC 0.1MF/25V F
C106	1-164-156-11	s	CAPACITOR,CERAMIC 0.1MF/25V F
C107	1-128-393-11	s	CAPACITOR,ELECT 100MF/10V
C108	1-164-156-11	s	CAPACITOR,CERAMIC 0.1MF/25V F
C109	1-164-156-11	s	CAPACITOR,CERAMIC 0.1MF/25V F
C110	1-128-393-11	s	CAPACITOR,ELECT 100MF/10V
C111	1-115-156-11	s	CAPACITOR,CERAMIC 1MF/10V(1608
C112	1-164-156-11	s	CAPACITOR,CERAMIC 0.1MF/25V F
C113	1-164-156-11	s	CAPACITOR,CERAMIC 0.1MF/25V F
C114	1-164-156-11	s	CAPACITOR,CERAMIC 0.1MF/25V F
C115	1-162-927-11	s	CAPACITOR,CERAMIC 100PF/50V CH
C116	1-164-217-11	s	CAPACITOR,CERAMIC 150PF/50V CH
C117	1-164-217-11	s	CAPACITOR,CERAMIC 150PF/50V CH
C118	1-164-156-11	s	CAPACITOR,CERAMIC 0.1MF/25V F
C119	1-164-156-11	s	CAPACITOR,CERAMIC 0.1MF/25V F
C120	1-164-156-11	s	CAPACITOR,CERAMIC 0.1MF/25V F
C121	1-164-156-11	s	CAPACITOR,CERAMIC 0.1MF/25V F
C122	1-128-393-11	s	CAPACITOR,ELECT 100MF/10V
C123	1-164-156-11	s	CAPACITOR,CERAMIC 0.1MF/25V F
C124	1-164-156-11	s	CAPACITOR,CERAMIC 0.1MF/25V F
C151	1-164-156-11	s	CAPACITOR,CERAMIC 0.1MF/25V F
C152	1-164-156-11	s	CAPACITOR,CERAMIC 0.1MF/25V F
C153	1-164-156-11	s	CAPACITOR,CERAMIC 0.1MF/25V F
C154	1-164-156-11	s	CAPACITOR,CERAMIC 0.1MF/25V F
C155	1-164-156-11	s	CAPACITOR,CERAMIC 0.1MF/25V F
C156	1-164-156-11	s	CAPACITOR,CERAMIC 0.1MF/25V F
C157	1-164-156-11	s	CAPACITOR,CERAMIC 0.1MF/25V F
C158	1-164-156-11	s	CAPACITOR,CERAMIC 0.1MF/25V F
C159	1-164-156-11	s	CAPACITOR,CERAMIC 0.1MF/25V F
C160	1-128-393-11	s	CAPACITOR,ELECT 100MF/10V

(DPR-175 BOARD (for DSR-1800/P))

Ref. No. or Q'ty	Part No.	SP	Description
C251	1-164-156-11	s	CAPACITOR,CERAMIC 0.1MF/25V F
C252	1-164-156-11	s	CAPACITOR,CERAMIC 0.1MF/25V F
C253	1-164-156-11	s	CAPACITOR,CERAMIC 0.1MF/25V F
C254	1-164-156-11	s	CAPACITOR,CERAMIC 0.1MF/25V F
C255	1-164-156-11	s	CAPACITOR,CERAMIC 0.1MF/25V F
C256	1-128-393-11	s	CAPACITOR,ELECT 100MF/10V
C257	1-164-156-11	s	CAPACITOR,CERAMIC 0.1MF/25V F
C258	1-164-156-11	s	CAPACITOR,CERAMIC 0.1MF/25V F
C302	1-164-156-11	s	CAPACITOR,CERAMIC 0.1MF/25V F
C303	1-164-156-11	s	CAPACITOR,CERAMIC 0.1MF/25V F
C304	1-164-156-11	s	CAPACITOR,CERAMIC 0.1MF/25V F
C305	1-164-156-11	s	CAPACITOR,CERAMIC 0.1MF/25V F
C306	1-164-156-11	s	CAPACITOR,CERAMIC 0.1MF/25V F
C307	1-128-393-11	s	CAPACITOR,ELECT 100MF/10V
C308	1-164-156-11	s	CAPACITOR,CERAMIC 0.1MF/25V F
C309	1-164-156-11	s	CAPACITOR,CERAMIC 0.1MF/25V F
C351	1-162-917-11	s	CAPACITOR,CERAMIC 15PF/50V CH
C352	1-164-156-11	s	CAPACITOR,CERAMIC 0.1MF/25V F
C353	1-162-917-11	s	CAPACITOR,CERAMIC 15PF/50V CH
C354	1-164-156-11	s	CAPACITOR,CERAMIC 0.1MF/25V F
C355	1-128-393-11	s	CAPACITOR,ELECT 100MF/10V
C356	1-162-964-11	s	CAPACITOR,CERAMIC 1000PF/50V B
C357	1-164-156-11	s	CAPACITOR,CERAMIC 0.1MF/25V F
C358	1-162-964-11	s	CAPACITOR,CERAMIC 1000PF/50V B
C359	1-162-964-11	s	CAPACITOR,CERAMIC 1000PF/50V B
C360	1-165-176-11	s	CAPACITOR,CERAMIC 47000PF/16V
C361	1-164-505-11	s	CAPACITOR,CHIP CERAMIC 2.2MF
C362	1-162-927-11	s	CAPACITOR,CERAMIC 100PF/50V CH
C363	1-162-964-11	s	CAPACITOR,CERAMIC 1000PF/50V B
C364	1-162-964-11	s	CAPACITOR,CERAMIC 1000PF/50V B
C365	1-162-964-11	s	CAPACITOR,CERAMIC 1000PF/50V B
C366	1-165-176-11	s	CAPACITOR,CERAMIC 47000PF/16V
C367	1-164-505-11	s	CAPACITOR,CHIP CERAMIC 2.2MF
C368	1-164-156-11	s	CAPACITOR,CERAMIC 0.1MF/25V F
C369	1-164-156-11	s	CAPACITOR,CERAMIC 0.1MF/25V F
C370	1-164-156-11	s	CAPACITOR,CERAMIC 0.1MF/25V F
C371	1-164-156-11	s	CAPACITOR,CERAMIC 0.1MF/25V F
C372	1-128-393-11	s	CAPACITOR,ELECT 100MF/10V
C373	1-164-156-11	s	CAPACITOR,CERAMIC 0.1MF/25V F
C374	1-164-156-11	s	CAPACITOR,CERAMIC 0.1MF/25V F
C375	1-128-393-11	s	CAPACITOR,ELECT 100MF/10V
C376	1-162-964-11	s	CAPACITOR,CERAMIC 1000PF/50V B
C377	1-162-927-11	s	CAPACITOR,CERAMIC 100PF/50V CH
C378	1-164-156-11	s	CAPACITOR,CERAMIC 0.1MF/25V F
C379	1-162-964-11	s	CAPACITOR,CERAMIC 1000PF/50V B
C380	1-162-964-11	s	CAPACITOR,CERAMIC 1000PF/50V B
C381	1-165-176-11	s	CAPACITOR,CERAMIC 47000PF/16V
C382	1-164-505-11	s	CAPACITOR,CHIP CERAMIC 2.2MF
C383	1-164-156-11	s	CAPACITOR,CERAMIC 0.1MF/25V F
C384	1-164-156-11	s	CAPACITOR,CERAMIC 0.1MF/25V F
C385	1-164-156-11	s	CAPACITOR,CERAMIC 0.1MF/25V F
C386	1-164-156-11	s	CAPACITOR,CERAMIC 0.1MF/25V F
C387	1-128-393-11	s	CAPACITOR,ELECT 100MF/10V
C388	1-164-156-11	s	CAPACITOR,CERAMIC 0.1MF/25V F
C389	1-164-156-11	s	CAPACITOR,CERAMIC 0.1MF/25V F
C390	1-164-156-11	s	CAPACITOR,CERAMIC 0.1MF/25V F
C451	1-164-230-11	s	CAPACITOR,CERAMIC 220PF/50V
C452	1-164-230-11	s	CAPACITOR,CERAMIC 220PF/50V
C453	1-164-156-11	s	CAPACITOR,CERAMIC 0.1MF/25V F

(DPR-175 BOARD (for DSR-1800/P))

Ref. No. or Q'ty	Part No.	SP	Description
C454	1-164-156-11	s	CAPACITOR,CERAMIC 0.1MF/25V F
C455	1-164-230-11	s	CAPACITOR,CERAMIC 220PF/50V
C456	1-164-230-11	s	CAPACITOR,CERAMIC 220PF/50V
C457	1-164-156-11	s	CAPACITOR,CERAMIC 0.1MF/25V F
C458	1-128-393-11	s	CAPACITOR,ELECT 100MF/10V
C459	1-164-156-11	s	CAPACITOR,CERAMIC 0.1MF/25V F
C460	1-164-156-11	s	CAPACITOR,CERAMIC 0.1MF/25V F
C461	1-164-156-11	s	CAPACITOR,CERAMIC 0.1MF/25V F
C462	1-164-156-11	s	CAPACITOR,CERAMIC 0.1MF/25V F
C463	1-164-156-11	s	CAPACITOR,CERAMIC 0.1MF/25V F
C464	1-128-393-11	s	CAPACITOR,ELECT 100MF/10V
C465	1-128-393-11	s	CAPACITOR,ELECT 100MF/10V
C466	1-164-156-11	s	CAPACITOR,CERAMIC 0.1MF/25V F
C467	1-164-156-11	s	CAPACITOR,CERAMIC 0.1MF/25V F
C468	1-128-393-11	s	CAPACITOR,ELECT 100MF/10V
C469	1-164-156-11	s	CAPACITOR,CERAMIC 0.1MF/25V F
C470	1-164-156-11	s	CAPACITOR,CERAMIC 0.1MF/25V F
C471	1-128-393-11	s	CAPACITOR,ELECT 100MF/10V
C472	1-164-156-11	s	CAPACITOR,CERAMIC 0.1MF/25V F
C473	1-164-156-11	s	CAPACITOR,CERAMIC 0.1MF/25V F
C474	1-128-393-11	s	CAPACITOR,ELECT 100MF/10V
C475	1-164-156-11	s	CAPACITOR,CERAMIC 0.1MF/25V F
C501	1-164-156-11	s	CAPACITOR,CERAMIC 0.1MF/25V F
C502	1-164-156-11	s	CAPACITOR,CERAMIC 0.1MF/25V F
C503	1-164-156-11	s	CAPACITOR,CERAMIC 0.1MF/25V F
C504	1-164-156-11	s	CAPACITOR,CERAMIC 0.1MF/25V F
C505	1-164-156-11	s	CAPACITOR,CERAMIC 0.1MF/25V F
C506	1-164-156-11	s	CAPACITOR,CERAMIC 0.1MF/25V F
C507	1-164-156-11	s	CAPACITOR,CERAMIC 0.1MF/25V F
C508	1-164-156-11	s	CAPACITOR,CERAMIC 0.1MF/25V F
C509	1-164-156-11	s	CAPACITOR,CERAMIC 0.1MF/25V F
C510	1-128-393-11	s	CAPACITOR,ELECT 100MF/10V
C551	1-164-156-11	s	CAPACITOR,CERAMIC 0.1MF/25V F
C552	1-128-393-11	s	CAPACITOR,ELECT 100MF/10V
C553	1-128-393-11	s	CAPACITOR,ELECT 100MF/10V
C554	1-164-156-11	s	CAPACITOR,CERAMIC 0.1MF/25V F
C555	1-128-394-11	s	CAPACITOR,ELECT 220MF/10V
C556	1-164-156-11	s	CAPACITOR,CERAMIC 0.1MF/25V F
C557	1-164-156-11	s	CAPACITOR,CERAMIC 0.1MF/25V F
C558	1-164-156-11	s	CAPACITOR,CERAMIC 0.1MF/25V F
C559	1-164-156-11	s	CAPACITOR,CERAMIC 0.1MF/25V F
C560	1-164-156-11	s	CAPACITOR,CERAMIC 0.1MF/25V F
C561	1-128-394-11	s	CAPACITOR,ELECT 220MF/10V
C562	1-164-156-11	s	CAPACITOR,CERAMIC 0.1MF/25V F
C563	1-164-156-11	s	CAPACITOR,CERAMIC 0.1MF/25V F
C564	1-164-156-11	s	CAPACITOR,CERAMIC 0.1MF/25V F
C565	1-164-156-11	s	CAPACITOR,CERAMIC 0.1MF/25V F
C566	1-164-156-11	s	CAPACITOR,CERAMIC 0.1MF/25V F
C567	1-164-156-11	s	CAPACITOR,CERAMIC 0.1MF/25V F
C568	1-164-156-11	s	CAPACITOR,CERAMIC 0.1MF/25V F
C569	1-164-156-11	s	CAPACITOR,CERAMIC 0.1MF/25V F
C570	1-164-156-11	s	CAPACITOR,CERAMIC 0.1MF/25V F
C571	1-164-156-11	s	CAPACITOR,CERAMIC 0.1MF/25V F
C572	1-164-156-11	s	CAPACITOR,CERAMIC 0.1MF/25V F
C573	1-164-156-11	s	CAPACITOR,CERAMIC 0.1MF/25V F
C574	1-164-156-11	s	CAPACITOR,CERAMIC 0.1MF/25V F
C575	1-164-156-11	s	CAPACITOR,CERAMIC 0.1MF/25V F
C576	1-164-156-11	s	CAPACITOR,CERAMIC 0.1MF/25V F
C577	1-164-156-11	s	CAPACITOR,CERAMIC 0.1MF/25V F

(DPR-175 BOARD (for DSR-1800/P))

Ref. No. or Q'ty	Part No.	SP	Description
C578	1-164-156-11	s	CAPACITOR,CERAMIC 0.1MF/25V F
C601	1-164-156-11	s	CAPACITOR,CERAMIC 0.1MF/25V F
C602	1-164-505-11	s	CAPACITOR,CHIP CERAMIC 2.2MF
C603	1-164-505-11	s	CAPACITOR,CHIP CERAMIC 2.2MF
C604	1-162-923-11	s	CAPACITOR,CERAMIC 47PF/50V CH
C605	1-164-156-11	s	CAPACITOR,CERAMIC 0.1MF/25V F
C606	1-164-156-11	s	CAPACITOR,CERAMIC 0.1MF/25V F
C607	1-164-156-11	s	CAPACITOR,CERAMIC 0.1MF/25V F
C608	1-164-156-11	s	CAPACITOR,CERAMIC 0.1MF/25V F
C609	1-164-156-11	s	CAPACITOR,CERAMIC 0.1MF/25V F
C610	1-128-393-11	s	CAPACITOR,ELECT 100MF/10V
C611	1-164-156-11	s	CAPACITOR,CERAMIC 0.1MF/25V F
C612	1-164-156-11	s	CAPACITOR,CERAMIC 0.1MF/25V F
C613	1-164-156-11	s	CAPACITOR,CERAMIC 0.1MF/25V F
C614	1-164-156-11	s	CAPACITOR,CERAMIC 0.1MF/25V F
C615	1-164-156-11	s	CAPACITOR,CERAMIC 0.1MF/25V F
C616	1-164-156-11	s	CAPACITOR,CERAMIC 0.1MF/25V F
C617	1-164-156-11	s	CAPACITOR,CERAMIC 0.1MF/25V F
C618	1-162-921-11	s	CAPACITOR,CERAMIC 33PF/50V CH
C620	1-164-156-11	s	CAPACITOR,CERAMIC 0.1MF/25V F
C621	1-164-156-11	s	CAPACITOR,CERAMIC 0.1MF/25V F
C622	1-164-156-11	s	CAPACITOR,CERAMIC 0.1MF/25V F
C623	1-164-156-11	s	CAPACITOR,CERAMIC 0.1MF/25V F
C624	1-164-156-11	s	CAPACITOR,CERAMIC 0.1MF/25V F
C625	1-164-156-11	s	CAPACITOR,CERAMIC 0.1MF/25V F
C626	1-164-156-11	s	CAPACITOR,CERAMIC 0.1MF/25V F
C627	1-164-156-11	s	CAPACITOR,CERAMIC 0.1MF/25V F
C628	1-164-156-11	s	CAPACITOR,CERAMIC 0.1MF/25V F
C629	1-164-156-11	s	CAPACITOR,CERAMIC 0.1MF/25V F
C630	1-164-156-11	s	CAPACITOR,CERAMIC 0.1MF/25V F
C631	1-164-156-11	s	CAPACITOR,CERAMIC 0.1MF/25V F
C632	1-164-156-11	s	CAPACITOR,CERAMIC 0.1MF/25V F
C633	1-164-156-11	s	CAPACITOR,CERAMIC 0.1MF/25V F
C634	1-164-156-11	s	CAPACITOR,CERAMIC 0.1MF/25V F
C635	1-164-156-11	s	CAPACITOR,CERAMIC 0.1MF/25V F
C636	1-164-156-11	s	CAPACITOR,CERAMIC 0.1MF/25V F
C637	1-164-156-11	s	CAPACITOR,CERAMIC 0.1MF/25V F
C638	1-164-156-11	s	CAPACITOR,CERAMIC 0.1MF/25V F
C639	1-164-156-11	s	CAPACITOR,CERAMIC 0.1MF/25V F
C640	1-164-156-11	s	CAPACITOR,CERAMIC 0.1MF/25V F
C651	1-164-156-11	s	CAPACITOR,CERAMIC 0.1MF/25V F
C652	1-164-156-11	s	CAPACITOR,CERAMIC 0.1MF/25V F
C653	1-164-156-11	s	CAPACITOR,CERAMIC 0.1MF/25V F
C654	1-164-156-11	s	CAPACITOR,CERAMIC 0.1MF/25V F
C655	1-128-393-11	s	CAPACITOR,ELECT 100MF/10V
C656	1-164-156-11	s	CAPACITOR,CERAMIC 0.1MF/25V F
C657	1-164-156-11	s	CAPACITOR,CERAMIC 0.1MF/25V F
C658	1-164-156-11	s	CAPACITOR,CERAMIC 0.1MF/25V F
C659	1-164-156-11	s	CAPACITOR,CERAMIC 0.1MF/25V F
C660	1-164-156-11	s	CAPACITOR,CERAMIC 0.1MF/25V F
C661	1-164-156-11	s	CAPACITOR,CERAMIC 0.1MF/25V F
C662	1-164-156-11	s	CAPACITOR,CERAMIC 0.1MF/25V F
C663	1-164-156-11	s	CAPACITOR,CERAMIC 0.1MF/25V F
C664	1-164-156-11	s	CAPACITOR,CERAMIC 0.1MF/25V F
C665	1-164-156-11	s	CAPACITOR,CERAMIC 0.1MF/25V F
C666	1-128-393-11	s	CAPACITOR,ELECT 100MF/10V
C667	1-164-156-11	s	CAPACITOR,CERAMIC 0.1MF/25V F
C668	1-164-156-11	s	CAPACITOR,CERAMIC 0.1MF/25V F
C669	1-164-156-11	s	CAPACITOR,CERAMIC 0.1MF/25V F

(DPR-175 BOARD (for DSR-1800/P))

Ref. No. or Q'ty	Part No.	SP	Description
C670	1-164-156-11	s	CAPACITOR,CERAMIC 0.1MF/25V F
C671	1-164-156-11	s	CAPACITOR,CERAMIC 0.1MF/25V F
C672	1-164-156-11	s	CAPACITOR,CERAMIC 0.1MF/25V F
C673	1-164-156-11	s	CAPACITOR,CERAMIC 0.1MF/25V F
C674	1-164-156-11	s	CAPACITOR,CERAMIC 0.1MF/25V F
C675	1-164-156-11	s	CAPACITOR,CERAMIC 0.1MF/25V F
C676	1-164-156-11	s	CAPACITOR,CERAMIC 0.1MF/25V F
C677	1-128-393-11	s	CAPACITOR,ELECT 100MF/10V
C678	1-164-156-11	s	CAPACITOR,CERAMIC 0.1MF/25V F
C679	1-164-156-11	s	CAPACITOR,CERAMIC 0.1MF/25V F
C680	1-164-156-11	s	CAPACITOR,CERAMIC 0.1MF/25V F
C681	1-164-156-11	s	CAPACITOR,CERAMIC 0.1MF/25V F
C682	1-164-156-11	s	CAPACITOR,CERAMIC 0.1MF/25V F
C683	1-164-156-11	s	CAPACITOR,CERAMIC 0.1MF/25V F
C684	1-164-156-11	s	CAPACITOR,CERAMIC 0.1MF/25V F
C685	1-164-156-11	s	CAPACITOR,CERAMIC 0.1MF/25V F
C751	1-164-156-11	s	CAPACITOR,CERAMIC 0.1MF/25V F
C752	1-128-393-11	s	CAPACITOR,ELECT 100MF/10V
C753	1-128-393-11	s	CAPACITOR,ELECT 100MF/10V
C754	1-164-156-11	s	CAPACITOR,CERAMIC 0.1MF/25V F
C755	1-128-394-11	s	CAPACITOR,ELECT 220MF/10V
C756	1-164-156-11	s	CAPACITOR,CERAMIC 0.1MF/25V F
C757	1-128-393-11	s	CAPACITOR,ELECT 100MF/10V
C758	1-128-393-11	s	CAPACITOR,ELECT 100MF/10V
C759	1-164-156-11	s	CAPACITOR,CERAMIC 0.1MF/25V F
C760	1-164-156-11	s	CAPACITOR,CERAMIC 0.1MF/25V F
C761	1-164-156-11	s	CAPACITOR,CERAMIC 0.1MF/25V F
C762	1-164-156-11	s	CAPACITOR,CERAMIC 0.1MF/25V F
C763	1-115-156-11	s	CAPACITOR,CERAMIC 1MF/10V(1608
C764	1-115-156-11	s	CAPACITOR,CERAMIC 1MF/10V(1608
C765	1-164-156-11	s	CAPACITOR,CERAMIC 0.1MF/25V F
C766	1-164-156-11	s	CAPACITOR,CERAMIC 0.1MF/25V F
C767	1-164-156-11	s	CAPACITOR,CERAMIC 0.1MF/25V F
C768	1-164-156-11	s	CAPACITOR,CERAMIC 0.1MF/25V F
C769	1-164-156-11	s	CAPACITOR,CERAMIC 0.1MF/25V F
C770	1-164-156-11	s	CAPACITOR,CERAMIC 0.1MF/25V F
C771	1-164-156-11	s	CAPACITOR,CERAMIC 0.1MF/25V F
C772	1-164-156-11	s	CAPACITOR,CERAMIC 0.1MF/25V F
C773	1-164-156-11	s	CAPACITOR,CERAMIC 0.1MF/25V F
C774	1-164-156-11	s	CAPACITOR,CERAMIC 0.1MF/25V F
C775	1-164-156-11	s	CAPACITOR,CERAMIC 0.1MF/25V F
C776	1-164-156-11	s	CAPACITOR,CERAMIC 0.1MF/25V F
C777	1-164-156-11	s	CAPACITOR,CERAMIC 0.1MF/25V F
C778	1-164-156-11	s	CAPACITOR,CERAMIC 0.1MF/25V F
C779	1-162-927-11	s	CAPACITOR,CERAMIC 100PF/50V CH
C780	1-162-927-11	s	CAPACITOR,CERAMIC 100PF/50V CH
C781	1-164-217-11	s	CAPACITOR,CERAMIC 150PF/50V CH
C782	1-164-217-11	s	CAPACITOR,CERAMIC 150PF/50V CH
C783	1-164-217-11	s	CAPACITOR,CERAMIC 150PF/50V CH
C784	1-164-217-11	s	CAPACITOR,CERAMIC 150PF/50V CH
C785	1-164-156-11	s	CAPACITOR,CERAMIC 0.1MF/25V F
C786	1-164-156-11	s	CAPACITOR,CERAMIC 0.1MF/25V F
C787	1-164-156-11	s	CAPACITOR,CERAMIC 0.1MF/25V F
C788	1-164-156-11	s	CAPACITOR,CERAMIC 0.1MF/25V F
C789	1-164-156-11	s	CAPACITOR,CERAMIC 0.1MF/25V F
C790	1-164-156-11	s	CAPACITOR,CERAMIC 0.1MF/25V F
C791	1-164-156-11	s	CAPACITOR,CERAMIC 0.1MF/25V F
C792	1-164-156-11	s	CAPACITOR,CERAMIC 0.1MF/25V F
C793	1-164-156-11	s	CAPACITOR,CERAMIC 0.1MF/25V F

(DPR-175 BOARD (for DSR-1800/P))

Ref. No. or Q'ty	Part No.	SP	Description
C794	1-164-156-11	s	CAPACITOR,CERAMIC 0.1MF/25V F
C795	1-164-156-11	s	CAPACITOR,CERAMIC 0.1MF/25V F
C796	1-164-156-11	s	CAPACITOR,CERAMIC 0.1MF/25V F
C797	1-164-156-11	s	CAPACITOR,CERAMIC 0.1MF/25V F
C798	1-164-156-11	s	CAPACITOR,CERAMIC 0.1MF/25V F
C799	1-164-156-11	s	CAPACITOR,CERAMIC 0.1MF/25V F
C901	1-164-156-11	s	CAPACITOR,CERAMIC 0.1MF/25V F
CN1	1-778-532-11	o	CONNECTOR, BOARD TO BOARD 80P
CN2	1-778-532-11	o	CONNECTOR, BOARD TO BOARD 80P
CN3	1-778-532-11	o	CONNECTOR, BOARD TO BOARD 80P
CN21	1-778-003-11	o	CONNECTOR, BOARD TO BOARD 80P
CN22	1-778-003-11	o	CONNECTOR, BOARD TO BOARD 80P
CN451	1-580-789-21	o	PIN,CONNECTOR (SMD) 6P
CN452	1-760-388-11	o	CONNECTOR PIN (SMD) 9 PIN
CN453	1-760-388-11	o	CONNECTOR PIN (SMD) 9 PIN
CN454	1-770-677-11	o	CONNECTOR,BOARD TO BOARD 50P
CN455	1-770-677-11	o	CONNECTOR,BOARD TO BOARD 50P
D101	8-719-041-39	s	DIODE KV1470 (5MA)
D351	8-719-041-39	s	DIODE KV1470 (5MA)
D352	8-719-027-95	s	DIODE HSM88WK
D353	8-719-041-39	s	DIODE KV1470 (5MA)
D354	8-719-027-95	s	DIODE HSM88WK
D355	8-719-041-39	s	DIODE KV1470 (5MA)
D356	8-719-027-95	s	DIODE HSM88WK
D751	8-719-041-39	s	DIODE KV1470 (5MA)
D752	8-719-041-39	s	DIODE KV1470 (5MA)
IC1	8-759-663-14	s	IC CXD9129AR
IC71	8-759-259-77	s	IC PQ20VZ5U
IC101	8-759-524-50	s	IC TC74VHC541FT(EL)
IC102	8-759-490-41	s	IC TC74VHCT541AFT(EL)
IC103	8-759-362-16	s	IC CXD2913AQ
IC104	8-729-039-85	s	IC UPC29L05T
IC105	8-759-702-02	s	IC NJM062M
IC106	8-759-679-78	s	IC CXD9127R
IC151	8-759-524-50	s	IC TC74VHC541FT(EL)
IC152	8-759-524-50	s	IC TC74VHC541FT(EL)
IC153	8-759-422-80	s	IC MN47V77ST1
IC154	8-759-422-80	s	IC MN47V77ST1
IC155	8-759-490-41	s	IC TC74VHCT541AFT(EL)
IC156	8-759-524-50	s	IC TC74VHC541FT(EL)
IC157	8-759-490-41	s	IC TC74VHCT541AFT(EL)
IC158	8-759-524-50	s	IC TC74VHC541FT(EL)
IC159	8-759-524-50	s	IC TC74VHC541FT(EL)
IC251	8-759-474-69	s	IC UPD82094GD-001-LKL
IC252	8-759-433-17	s	IC UPD482445LG4-B10-9MH-E2-HDC
IC301	8-759-474-69	s	IC UPD82094GD-001-LKL
IC302	8-759-433-17	s	IC UPD482445LG4-B10-9MH-E2-HDC
IC351	8-759-271-88	s	IC TC7SHU04FU
IC352	8-759-548-77	s	IC SN74LV245ANSR
IC353	8-759-196-96	s	IC TC7SH08FU (TE85R)
IC354	8-752-378-75	s	IC CXD3106R
IC355	8-759-491-41	s	IC TC74VHCT541AF(EL)
IC356	8-759-491-41	s	IC TC74VHCT541AF(EL)
IC357	8-759-196-96	s	IC TC7SH08FU (TE85R)
IC358	8-752-378-75	s	IC CXD3106R
IC360	8-759-271-86	s	IC TC7SH04FU
IC361	8-759-271-86	s	IC TC7SH04FU
IC362	8-759-546-74	s	IC TC7WH157FU(TE12R)

(DPR-175 BOARD (for DSR-1800/P))

Ref. No. or Q'ty	Part No.	SP	Description
IC451	8-759-524-50	s	IC TC74VHC541FT(EL)
IC452	8-759-524-50	s	IC TC74VHC541FT(EL)
IC453	8-759-524-50	s	IC TC74VHC541FT(EL)
IC454	8-759-524-50	s	IC TC74VHC541FT(EL)
IC455	8-759-524-50	s	IC TC74VHC541FT(EL)
IC456	8-759-537-83	s	IC MBM29F400BC-70PFTN
IC457	8-759-655-86	o	IC XC9536VQ44-DSR2000-DPR-V10
IC458	8-759-537-83	s	IC MBM29F400BC-70PFTN
IC459	8-759-655-86	o	IC XC9536VQ44-DSR2000-DPR-V10
IC501	8-752-379-31	s	IC CXD3107R
IC502	8-752-379-31	s	IC CXD3107R
IC551	8-759-259-77	s	IC PQ20VZ5U
IC553	8-759-589-36	s	IC MB81F641642C-103LFN-B
IC554	8-759-589-36	s	IC MB81F641642C-103LFN-B
IC602	8-759-523-79	s	IC TC74VHC02FT
IC603	8-759-523-95	s	IC TC74VHC74FT(EL)
IC604	8-759-523-97	s	IC TC74VHC123AFT(EL)
IC605	8-759-523-79	s	IC TC74VHC02FT
IC606	8-759-523-84	s	IC TC74VHC14FT (EL)
IC607	8-759-523-79	s	IC TC74VHC02FT
IC608	8-759-523-79	s	IC TC74VHC02FT
IC609	8-759-523-95	s	IC TC74VHC74FT(EL)
IC610	8-759-523-79	s	IC TC74VHC02FT
IC611	8-759-523-95	s	IC TC74VHC74FT(EL)
IC612	8-759-524-19	s	IC TC74VHC164FT(EL)
IC613	8-759-524-19	s	IC TC74VHC164FT(EL)
IC614	8-759-326-71	s	IC CXD8517Q
IC615	8-759-326-71	s	IC CXD8517Q
IC616	8-759-426-24	s	IC TC7ST08FU(TE85R)
IC617	8-759-490-41	s	IC TC74VHCT541AFT(EL)
IC618	8-759-524-19	s	IC TC74VHC164FT(EL)
IC619	8-759-326-71	s	IC CXD8517Q
IC620	8-759-326-71	s	IC CXD8517Q
IC621	8-759-524-50	s	IC TC74VHC541FT(EL)
IC622	8-759-524-19	s	IC TC74VHC164FT(EL)
IC623	8-759-326-71	s	IC CXD8517Q
IC624	8-759-326-71	s	IC CXD8517Q
IC625	8-759-490-41	s	IC TC74VHCT541AFT(EL)
IC651	8-759-523-94	s	IC TC74VHC32FT(EL)
IC652	8-759-524-50	s	IC TC74VHC541FT(EL)
IC653	8-759-645-48	s	IC IDT71V016S15PH-TL
IC654	8-752-391-87	s	IC CXD2712R
IC655	8-759-490-41	s	IC TC74VHCT541AFT(EL)
IC656	8-752-391-87	s	IC CXD2712R
IC657	8-759-645-48	s	IC IDT71V016S15PH-TL
IC658	8-752-391-87	s	IC CXD2712R
IC751	8-759-702-02	s	IC NJM062M
IC752	8-759-702-02	s	IC NJM062M
IC753	8-759-259-77	s	IC PQ20VZ5U
IC755	8-759-524-50	s	IC TC74VHC541FT(EL)
IC756	8-759-524-50	s	IC TC74VHC541FT(EL)
IC757	8-729-039-85	s	IC UPC29L05T
IC758	8-759-362-16	s	IC CXD2913AQ
IC759	8-759-362-16	s	IC CXD2913AQ
IC760	8-759-491-41	s	IC TC74VHCT541AF(EL)
IC761	8-759-491-41	s	IC TC74VHCT541AF(EL)
IC762	8-759-491-41	s	IC TC74VHCT541AF(EL)
IC763	8-759-524-50	s	IC TC74VHC541FT(EL)
IC764	8-759-490-41	s	IC TC74VHCT541AFT(EL)

(DPR-175 BOARD (for DSR-1800/P))

Ref. No. or Q'ty	Part No.	SP	Description
IC901	8-759-524-50	s	IC TC74VHC541FT(EL)
L1	1-414-398-11	s	INDUCTOR (SMD) 10UH
L71	1-414-398-11	s	INDUCTOR (SMD) 10UH
L72	1-414-398-11	s	INDUCTOR (SMD) 10UH
L101	1-414-398-11	s	INDUCTOR (SMD) 10UH
L102	1-414-398-11	s	INDUCTOR (SMD) 10UH
L151	1-414-398-11	s	INDUCTOR (SMD) 10UH
L152	1-414-398-11	s	INDUCTOR (SMD) 10UH
L153	1-414-398-11	s	INDUCTOR (SMD) 10UH
L251	1-414-398-11	s	INDUCTOR (SMD) 10UH
L301	1-414-398-11	s	INDUCTOR (SMD) 10UH
L351	1-414-398-11	s	INDUCTOR (SMD) 10UH
L352	1-412-182-11	s	MICRO INDUCTOR 5.6UH
L353	1-412-173-11	s	MICRO INDUCTOR 0.82UH
L354	1-414-398-11	s	INDUCTOR (SMD) 10UH
L355	1-414-398-11	s	INDUCTOR (SMD) 10UH
L356	1-412-173-11	s	MICRO INDUCTOR 0.82UH
L357	1-414-398-11	s	INDUCTOR (SMD) 10UH
L451	1-414-398-11	s	INDUCTOR (SMD) 10UH
L452	1-424-643-11	s	COIL, CHOKE 10UH
L453	1-414-398-11	s	INDUCTOR (SMD) 10UH
L454	1-414-398-11	s	INDUCTOR (SMD) 10UH
L501	1-414-398-11	s	INDUCTOR (SMD) 10UH
L551	1-414-398-11	s	INDUCTOR (SMD) 10UH
L552	1-414-398-11	s	INDUCTOR (SMD) 10UH
L553	1-414-398-11	s	INDUCTOR (SMD) 10UH
L601	1-414-398-11	s	INDUCTOR (SMD) 10UH
L602	1-412-939-11	s	INDUCTOR 1.0UH (2520)
L603	1-412-939-11	s	INDUCTOR 1.0UH (2520)
L604	1-412-939-11	s	INDUCTOR 1.0UH (2520)
L605	1-412-939-11	s	INDUCTOR 1.0UH (2520)
L651	1-414-398-11	s	INDUCTOR (SMD) 10UH
L652	1-414-398-11	s	INDUCTOR (SMD) 10UH
L653	1-414-398-11	s	INDUCTOR (SMD) 10UH
L751	1-414-521-11	s	INDUCTOR, SMALL TYPE 10.0UH
L752	1-414-521-11	s	INDUCTOR, SMALL TYPE 10.0UH
L753	1-414-521-11	s	INDUCTOR, SMALL TYPE 10.0UH
LV101	1-411-984-11	s	COIL, VARIABLE
LV751	1-411-984-11	s	COIL, VARIABLE
LV752	1-411-984-11	s	COIL, VARIABLE
PS451	⚠ 1-533-282-21	s	CIRCUIT PROTECTOR 2A (3225)
PS452	⚠ 1-533-282-21	s	CIRCUIT PROTECTOR 2A (3225)
PS453	⚠ 1-533-282-21	s	CIRCUIT PROTECTOR 2A (3225)
PS454	⚠ 1-533-282-21	s	CIRCUIT PROTECTOR 2A (3225)
Q451	8-729-029-14	s	TRANSISTOR DTC144EUA-T106
Q452	8-729-117-32	s	TRANSISTOR 2SC4177
Q453	8-729-117-32	s	TRANSISTOR 2SC4177
Q454	8-729-029-14	s	TRANSISTOR DTC144EUA-T106
Q455	8-729-029-14	s	TRANSISTOR DTC144EUA-T106
Q456	8-729-029-14	s	TRANSISTOR DTC144EUA-T106
Q457	8-729-029-14	s	TRANSISTOR DTC144EUA-T106
Q458	8-729-029-14	s	TRANSISTOR DTC144EUA-T106
Q459	8-729-029-14	s	TRANSISTOR DTC144EUA-T106
Q460	8-729-029-14	s	TRANSISTOR DTC144EUA-T106
Q461	8-729-029-14	s	TRANSISTOR DTC144EUA-T106
Q462	8-729-029-14	s	TRANSISTOR DTC144EUA-T106
Q463	8-729-029-14	s	TRANSISTOR DTC144EUA-T106

(DPR-175 BOARD (for DSR-1800/P))

Ref. No. or Q'ty	Part No.	SP	Description
Q464	8-729-029-14	s	TRANSISTOR DTC144EUA-T106
R1	1-216-809-11	s	RESISTOR,CHIP 100 1/16W 1608
R2	1-216-809-11	s	RESISTOR,CHIP 100 1/16W 1608
R3	1-216-809-11	s	RESISTOR,CHIP 100 1/16W 1608
R4	1-216-809-11	s	RESISTOR,CHIP 100 1/16W 1608
R5	1-216-809-11	s	RESISTOR,CHIP 100 1/16W 1608
R6	1-216-809-11	s	RESISTOR,CHIP 100 1/16W 1608
R7	1-216-809-11	s	RESISTOR,CHIP 100 1/16W 1608
R8	1-216-809-11	s	RESISTOR,CHIP 100 1/16W 1608
R9	1-216-809-11	s	RESISTOR,CHIP 100 1/16W 1608
R10	1-216-801-11	s	RESISTOR,CHIP 22 1/16W (1608)
R11	1-216-801-11	s	RESISTOR,CHIP 22 1/16W (1608)
R12	1-216-801-11	s	RESISTOR,CHIP 22 1/16W (1608)
R13	1-216-801-11	s	RESISTOR,CHIP 22 1/16W (1608)
R14	1-216-801-11	s	RESISTOR,CHIP 22 1/16W (1608)
R15	1-216-801-11	s	RESISTOR,CHIP 22 1/16W (1608)
R16	1-216-801-11	s	RESISTOR,CHIP 22 1/16W (1608)
R17	1-216-809-11	s	RESISTOR,CHIP 100 1/16W 1608
R18	1-216-801-11	s	RESISTOR,CHIP 22 1/16W (1608)
R19	1-216-809-11	s	RESISTOR,CHIP 100 1/16W 1608
R20	1-216-809-11	s	RESISTOR,CHIP 100 1/16W 1608
R21	1-216-809-11	s	RESISTOR,CHIP 100 1/16W 1608
R22	1-216-809-11	s	RESISTOR,CHIP 100 1/16W 1608
R23	1-216-809-11	s	RESISTOR,CHIP 100 1/16W 1608
R24	1-216-809-11	s	RESISTOR,CHIP 100 1/16W 1608
R25	1-216-809-11	s	RESISTOR,CHIP 100 1/16W 1608
R26	1-216-809-11	s	RESISTOR,CHIP 100 1/16W 1608
R27	1-216-809-11	s	RESISTOR,CHIP 100 1/16W 1608
R28	1-216-809-11	s	RESISTOR,CHIP 100 1/16W 1608
R29	1-216-809-11	s	RESISTOR,CHIP 100 1/16W 1608
R30	1-216-809-11	s	RESISTOR,CHIP 100 1/16W 1608
R31	1-216-809-11	s	RESISTOR,CHIP 100 1/16W 1608
R32	1-216-809-11	s	RESISTOR,CHIP 100 1/16W 1608
R33	1-216-809-11	s	RESISTOR,CHIP 100 1/16W 1608
R34	1-216-809-11	s	RESISTOR,CHIP 100 1/16W 1608
R35	1-216-809-11	s	RESISTOR,CHIP 100 1/16W 1608
R36	1-216-809-11	s	RESISTOR,CHIP 100 1/16W 1608
R37	1-216-809-11	s	RESISTOR,CHIP 100 1/16W 1608
R38	1-216-845-11	s	RESISTOR,CHIP 100K 1/16W(1608)
R39	1-216-809-11	s	RESISTOR,CHIP 100 1/16W 1608
R40	1-216-809-11	s	RESISTOR,CHIP 100 1/16W 1608
R41	1-216-809-11	s	RESISTOR,CHIP 100 1/16W 1608
R42	1-216-809-11	s	RESISTOR,CHIP 100 1/16W 1608
R43	1-216-801-11	s	RESISTOR,CHIP 22 1/16W (1608)
R44	1-216-801-11	s	RESISTOR,CHIP 22 1/16W (1608)
R45	1-216-801-11	s	RESISTOR,CHIP 22 1/16W (1608)
R46	1-216-801-11	s	RESISTOR,CHIP 22 1/16W (1608)
R47	1-216-801-11	s	RESISTOR,CHIP 22 1/16W (1608)
R48	1-216-801-11	s	RESISTOR,CHIP 22 1/16W (1608)
R49	1-216-801-11	s	RESISTOR,CHIP 22 1/16W (1608)
R50	1-216-801-11	s	RESISTOR,CHIP 22 1/16W (1608)
R51	1-216-801-11	s	RESISTOR,CHIP 22 1/16W (1608)
R52	1-216-801-11	s	RESISTOR,CHIP 22 1/16W (1608)
R53	1-216-801-11	s	RESISTOR,CHIP 22 1/16W (1608)
R54	1-216-801-11	s	RESISTOR,CHIP 22 1/16W (1608)
R55	1-216-801-11	s	RESISTOR,CHIP 22 1/16W (1608)
R56	1-216-801-11	s	RESISTOR,CHIP 22 1/16W (1608)
R57	1-216-801-11	s	RESISTOR,CHIP 22 1/16W (1608)

(DPR-175 BOARD (for DSR-1800/P))

Ref. No. or Q'ty	Part No.	SP	Description
R58	1-216-801-11	s	RESISTOR,CHIP 22 1/16W (1608)
R59	1-216-801-11	s	RESISTOR,CHIP 22 1/16W (1608)
R60	1-216-801-11	s	RESISTOR,CHIP 22 1/16W (1608)
R61	1-216-809-11	s	RESISTOR,CHIP 100 1/16W 1608
R71	1-216-821-11	s	RESISTOR,CHIP 1.0K 1/16W(1608)
R72	1-216-821-11	s	RESISTOR,CHIP 1.0K 1/16W(1608)
R73	1-216-845-11	s	RESISTOR,CHIP 100K 1/16W(1608)
R74	1-216-864-11	s	RESISTOR,CHIP 0 1/16W (1608)
R76	1-216-833-11	s	RESISTOR,CHIP 10K 1/16W (1608)
R101	1-216-841-11	s	RESISTOR, CHIP 47K 1/16W 1608
R102	1-216-838-11	s	RESISTOR CHIP 27K 1/16W(1608)
R103	1-216-839-11	s	RESISTOR,CHIP 33K 1/16W 1608
R104	1-216-841-11	s	RESISTOR, CHIP 47K 1/16W 1608
R105	1-216-864-11	s	RESISTOR,CHIP 0 1/16W (1608)
R106	1-216-829-11	s	RESISTOR,CHIP 4.7K 1/16W(1608)
R107	1-216-841-11	s	RESISTOR, CHIP 47K 1/16W 1608
R109	1-216-835-11	s	RESISTOR,CHIP 15K 1/16W
R110	1-216-841-11	s	RESISTOR, CHIP 47K 1/16W 1608
R111	1-216-864-11	s	RESISTOR,CHIP 0 1/16W (1608)
R112	1-216-845-11	s	RESISTOR,CHIP 100K 1/16W(1608)
R151	1-216-864-11	s	RESISTOR,CHIP 0 1/16W (1608)
R152	1-216-809-11	s	RESISTOR,CHIP 100 1/16W 1608
R153	1-216-809-11	s	RESISTOR,CHIP 100 1/16W 1608
R154	1-216-809-11	s	RESISTOR,CHIP 100 1/16W 1608
R155	1-216-809-11	s	RESISTOR,CHIP 100 1/16W 1608
R156	1-216-809-11	s	RESISTOR,CHIP 100 1/16W 1608
R157	1-216-809-11	s	RESISTOR,CHIP 100 1/16W 1608
R158	1-216-809-11	s	RESISTOR,CHIP 100 1/16W 1608
R159	1-216-809-11	s	RESISTOR,CHIP 100 1/16W 1608
R160	1-216-833-11	s	RESISTOR,CHIP 10K 1/16W (1608)
R161	1-216-809-11	s	RESISTOR,CHIP 100 1/16W 1608
R162	1-216-809-11	s	RESISTOR,CHIP 100 1/16W 1608
R163	1-216-809-11	s	RESISTOR,CHIP 100 1/16W 1608
R164	1-216-809-11	s	RESISTOR,CHIP 100 1/16W 1608
R165	1-216-809-11	s	RESISTOR,CHIP 100 1/16W 1608
R166	1-216-809-11	s	RESISTOR,CHIP 100 1/16W 1608
R167	1-216-809-11	s	RESISTOR,CHIP 100 1/16W 1608
R168	1-216-809-11	s	RESISTOR,CHIP 100 1/16W 1608
R169	1-216-809-11	s	RESISTOR,CHIP 100 1/16W 1608
R170	1-216-809-11	s	RESISTOR,CHIP 100 1/16W 1608
R171	1-216-809-11	s	RESISTOR,CHIP 100 1/16W 1608
R172	1-216-809-11	s	RESISTOR,CHIP 100 1/16W 1608
R173	1-216-809-11	s	RESISTOR,CHIP 100 1/16W 1608
R174	1-216-809-11	s	RESISTOR,CHIP 100 1/16W 1608
R175	1-216-809-11	s	RESISTOR,CHIP 100 1/16W 1608
R176	1-216-809-11	s	RESISTOR,CHIP 100 1/16W 1608
R177	1-216-801-11	s	RESISTOR,CHIP 22 1/16W (1608)
R178	1-216-801-11	s	RESISTOR,CHIP 22 1/16W (1608)
R179	1-216-805-11	s	RESISTOR,CHIP 47 1/16W 1608
R180	1-216-805-11	s	RESISTOR,CHIP 47 1/16W 1608
R181	1-216-805-11	s	RESISTOR,CHIP 47 1/16W 1608
R182	1-216-805-11	s	RESISTOR,CHIP 47 1/16W 1608
R183	1-216-805-11	s	RESISTOR,CHIP 47 1/16W 1608
R184	1-216-805-11	s	RESISTOR,CHIP 47 1/16W 1608
R185	1-216-805-11	s	RESISTOR,CHIP 47 1/16W 1608
R186	1-216-805-11	s	RESISTOR,CHIP 47 1/16W 1608
R187	1-216-805-11	s	RESISTOR,CHIP 47 1/16W 1608
R188	1-216-805-11	s	RESISTOR,CHIP 47 1/16W 1608
R189	1-216-805-11	s	RESISTOR,CHIP 47 1/16W 1608

(DPR-175 BOARD (for DSR-1800/P))

Ref. No. or Q'ty	Part No.	SP	Description
R190	1-216-805-11	s	RESISTOR,CHIP 47 1/16W 1608
R191	1-216-805-11	s	RESISTOR,CHIP 47 1/16W 1608
R192	1-216-805-11	s	RESISTOR,CHIP 47 1/16W 1608
R193	1-216-805-11	s	RESISTOR,CHIP 47 1/16W 1608
R194	1-216-805-11	s	RESISTOR,CHIP 47 1/16W 1608
R195	1-216-805-11	s	RESISTOR,CHIP 47 1/16W 1608
R196	1-216-805-11	s	RESISTOR,CHIP 47 1/16W 1608
R197	1-216-805-11	s	RESISTOR,CHIP 47 1/16W 1608
R198	1-216-805-11	s	RESISTOR,CHIP 47 1/16W 1608
R199	1-216-805-11	s	RESISTOR,CHIP 47 1/16W 1608
R200	1-216-864-11	s	RESISTOR,CHIP 0 1/16W (1608)
R201	1-216-801-11	s	RESISTOR,CHIP 22 1/16W (1608)
R202	1-216-801-11	s	RESISTOR,CHIP 22 1/16W (1608)
R203	1-216-801-11	s	RESISTOR,CHIP 22 1/16W (1608)
R204	1-216-801-11	s	RESISTOR,CHIP 22 1/16W (1608)
R205	1-216-801-11	s	RESISTOR,CHIP 22 1/16W (1608)
R206	1-216-801-11	s	RESISTOR,CHIP 22 1/16W (1608)
R207	1-216-801-11	s	RESISTOR,CHIP 22 1/16W (1608)
R208	1-216-864-11	s	RESISTOR,CHIP 0 1/16W (1608)
R209	1-216-864-11	s	RESISTOR,CHIP 0 1/16W (1608)
R210	1-216-864-11	s	RESISTOR,CHIP 0 1/16W (1608)
R211	1-216-864-11	s	RESISTOR,CHIP 0 1/16W (1608)
R212	1-216-864-11	s	RESISTOR,CHIP 0 1/16W (1608)
R213	1-216-864-11	s	RESISTOR,CHIP 0 1/16W (1608)
R214	1-216-864-11	s	RESISTOR,CHIP 0 1/16W (1608)
R215	1-216-801-11	s	RESISTOR,CHIP 22 1/16W (1608)
R216	1-216-801-11	s	RESISTOR,CHIP 22 1/16W (1608)
R217	1-216-801-11	s	RESISTOR,CHIP 22 1/16W (1608)
R218	1-216-801-11	s	RESISTOR,CHIP 22 1/16W (1608)
R219	1-216-864-11	s	RESISTOR,CHIP 0 1/16W (1608)
R220	1-216-864-11	s	RESISTOR,CHIP 0 1/16W (1608)
R221	1-216-864-11	s	RESISTOR,CHIP 0 1/16W (1608)
R222	1-216-864-11	s	RESISTOR,CHIP 0 1/16W (1608)
R223	1-216-864-11	s	RESISTOR,CHIP 0 1/16W (1608)
R224	1-216-864-11	s	RESISTOR,CHIP 0 1/16W (1608)
R225	1-216-864-11	s	RESISTOR,CHIP 0 1/16W (1608)
R226	1-216-864-11	s	RESISTOR,CHIP 0 1/16W (1608)
R227	1-216-864-11	s	RESISTOR,CHIP 0 1/16W (1608)
R228	1-216-864-11	s	RESISTOR,CHIP 0 1/16W (1608)
R229	1-216-864-11	s	RESISTOR,CHIP 0 1/16W (1608)
R230	1-216-864-11	s	RESISTOR,CHIP 0 1/16W (1608)
R231	1-216-864-11	s	RESISTOR,CHIP 0 1/16W (1608)
R232	1-216-864-11	s	RESISTOR,CHIP 0 1/16W (1608)
R233	1-216-864-11	s	RESISTOR,CHIP 0 1/16W (1608)
R234	1-216-801-11	s	RESISTOR,CHIP 22 1/16W (1608)
R235	1-216-801-11	s	RESISTOR,CHIP 22 1/16W (1608)
R236	1-216-801-11	s	RESISTOR,CHIP 22 1/16W (1608)
R237	1-216-801-11	s	RESISTOR,CHIP 22 1/16W (1608)
R238	1-216-801-11	s	RESISTOR,CHIP 22 1/16W (1608)
R239	1-216-801-11	s	RESISTOR,CHIP 22 1/16W (1608)
R240	1-216-801-11	s	RESISTOR,CHIP 22 1/16W (1608)
R241	1-216-801-11	s	RESISTOR,CHIP 22 1/16W (1608)
R242	1-216-801-11	s	RESISTOR,CHIP 22 1/16W (1608)
R243	1-216-801-11	s	RESISTOR,CHIP 22 1/16W (1608)
R244	1-216-801-11	s	RESISTOR,CHIP 22 1/16W (1608)
R245	1-216-801-11	s	RESISTOR,CHIP 22 1/16W (1608)
R246	1-216-801-11	s	RESISTOR,CHIP 22 1/16W (1608)
R247	1-216-801-11	s	RESISTOR,CHIP 22 1/16W (1608)
R248	1-216-801-11	s	RESISTOR,CHIP 22 1/16W (1608)

(DPR-175 BOARD (for DSR-1800/P))

Ref. No. or Q'ty	Part No.	SP	Description
R249	1-216-801-11	s	RESISTOR,CHIP 22 1/16W (1608)
R250	1-216-864-11	s	RESISTOR,CHIP 0 1/16W (1608)
R251	1-216-864-11	s	RESISTOR,CHIP 0 1/16W (1608)
R252	1-216-864-11	s	RESISTOR,CHIP 0 1/16W (1608)
R253	1-216-864-11	s	RESISTOR,CHIP 0 1/16W (1608)
R254	1-216-809-11	s	RESISTOR,CHIP 100 1/16W 1608
R255	1-216-809-11	s	RESISTOR,CHIP 100 1/16W 1608
R256	1-216-809-11	s	RESISTOR,CHIP 100 1/16W 1608
R257	1-216-845-11	s	RESISTOR,CHIP 100K 1/16W(1608)
R258	1-216-845-11	s	RESISTOR,CHIP 100K 1/16W(1608)
R259	1-216-864-11	s	RESISTOR,CHIP 0 1/16W (1608)
R260	1-216-809-11	s	RESISTOR,CHIP 100 1/16W 1608
R261	1-216-809-11	s	RESISTOR,CHIP 100 1/16W 1608
R262	1-216-809-11	s	RESISTOR,CHIP 100 1/16W 1608
R263	1-216-809-11	s	RESISTOR,CHIP 100 1/16W 1608
R264	1-216-809-11	s	RESISTOR,CHIP 100 1/16W 1608
R265	1-216-809-11	s	RESISTOR,CHIP 100 1/16W 1608
R301	1-216-864-11	s	RESISTOR,CHIP 0 1/16W (1608)
R302	1-216-845-11	s	RESISTOR,CHIP 100K 1/16W(1608)
R303	1-216-864-11	s	RESISTOR,CHIP 0 1/16W (1608)
R304	1-216-845-11	s	RESISTOR,CHIP 100K 1/16W(1608)
R305	1-216-864-11	s	RESISTOR,CHIP 0 1/16W (1608)
R306	1-216-864-11	s	RESISTOR,CHIP 0 1/16W (1608)
R351	1-216-857-11	s	RESISTOR,CHIP 1M 1/16W(1608)
R352	1-216-801-11	s	RESISTOR,CHIP 22 1/16W (1608)
R353	1-216-801-11	s	RESISTOR,CHIP 22 1/16W (1608)
R354	1-216-801-11	s	RESISTOR,CHIP 22 1/16W (1608)
R355	1-216-801-11	s	RESISTOR,CHIP 22 1/16W (1608)
R356	1-216-801-11	s	RESISTOR,CHIP 22 1/16W (1608)
R357	1-216-864-11	s	RESISTOR,CHIP 0 1/16W (1608)
R358	1-216-864-11	s	RESISTOR,CHIP 0 1/16W (1608)
R359	1-216-833-11	s	RESISTOR,CHIP 10K 1/16W (1608)
R360	1-216-833-11	s	RESISTOR,CHIP 10K 1/16W (1608)
R361	1-216-829-11	s	RESISTOR,CHIP 4.7K 1/16W(1608)
R362	1-216-805-11	s	RESISTOR,CHIP 47 1/16W 1608
R363	1-216-815-11	s	RESISTOR,CHIP 330 1/16W 1608
R364	1-216-833-11	s	RESISTOR,CHIP 10K 1/16W (1608)
R365	1-216-864-11	s	RESISTOR,CHIP 0 1/16W (1608)
R366	1-216-857-11	s	RESISTOR,CHIP 1M 1/16W(1608)
R367	1-216-833-11	s	RESISTOR,CHIP 10K 1/16W (1608)
R368	1-216-829-11	s	RESISTOR,CHIP 4.7K 1/16W(1608)
R369	1-216-805-11	s	RESISTOR,CHIP 47 1/16W 1608
R370	1-216-864-11	s	RESISTOR,CHIP 0 1/16W (1608)
R371	1-216-845-11	s	RESISTOR,CHIP 100K 1/16W(1608)
R372	1-216-817-11	s	RESISTOR,CHIP 470 1/16W 1608
R373	1-216-845-11	s	RESISTOR,CHIP 100K 1/16W(1608)
R374	1-216-809-11	s	RESISTOR,CHIP 100 1/16W 1608
R374 *1	1-216-864-11	s	RESISTOR,CHIP 0 1/16W (1608)
R374 *2	1-216-801-11	s	RESISTOR,CHIP 22 1/16W (1608)
R375	1-216-801-11	s	RESISTOR,CHIP 22 1/16W (1608)
R376	1-216-801-11	s	RESISTOR,CHIP 22 1/16W (1608)
R377	1-216-801-11	s	RESISTOR,CHIP 22 1/16W (1608)
R378	1-216-801-11	s	RESISTOR,CHIP 22 1/16W (1608)
R379	1-216-801-11	s	RESISTOR,CHIP 22 1/16W (1608)
R380	1-216-801-11	s	RESISTOR,CHIP 22 1/16W (1608)
R381	1-216-801-11	s	RESISTOR,CHIP 22 1/16W (1608)
R382	1-216-801-11	s	RESISTOR,CHIP 22 1/16W (1608)
R383	1-216-801-11	s	RESISTOR,CHIP 22 1/16W (1608)
R384	1-216-801-11	s	RESISTOR,CHIP 22 1/16W (1608)

(DPR-175 BOARD (for DSR-1800/P))

Ref. No. or Q'ty	Part No.	SP	Description
R384	*1 DELETE		
R385	1-216-801-11	s	RESISTOR,CHIP 22 1/16W (1608)
R386	1-216-801-11	s	RESISTOR,CHIP 22 1/16W (1608)
R387	1-216-797-11	s	RESISTOR,CHIP 10 1/16W 1608
R388	1-216-809-11	s	RESISTOR,CHIP 100 1/16W 1608
R389	1-216-809-11	s	RESISTOR,CHIP 100 1/16W 1608
R390	1-216-809-11	s	RESISTOR,CHIP 100 1/16W 1608
R391	1-216-809-11	s	RESISTOR,CHIP 100 1/16W 1608
R392	1-216-801-11	s	RESISTOR,CHIP 22 1/16W (1608)
R394	1-216-833-11	s	RESISTOR,CHIP 10K 1/16W (1608)
R395	1-216-833-11	s	RESISTOR,CHIP 10K 1/16W (1608)
R396	1-216-829-11	s	RESISTOR,CHIP 4.7K 1/16W(1608)
R397	1-216-857-11	s	RESISTOR,CHIP 1M 1/16W(1608)
R398	1-216-864-11	s	RESISTOR,CHIP 0 1/16W (1608)
R399	1-216-864-11	s	RESISTOR,CHIP 0 1/16W (1608)
R400	1-216-805-11	s	RESISTOR,CHIP 47 1/16W 1608
R401	1-216-817-11	s	RESISTOR,CHIP 470 1/16W 1608
R402	1-216-845-11	s	RESISTOR,CHIP 100K 1/16W(1608)
R403	1-216-864-11	s	RESISTOR,CHIP 0 1/16W (1608)
R404	1-216-845-11	s	RESISTOR,CHIP 100K 1/16W(1608)
R405	1-216-864-11	s	RESISTOR,CHIP 0 1/16W (1608)
R406	1-216-809-11	s	RESISTOR,CHIP 100 1/16W 1608
R407	1-216-809-11	s	RESISTOR,CHIP 100 1/16W 1608
R408	1-216-809-11	s	RESISTOR,CHIP 100 1/16W 1608
R409	1-216-797-11	s	RESISTOR,CHIP 10 1/16W 1608
R410	1-216-809-11	s	RESISTOR,CHIP 100 1/16W (1608)
R410	*1 1-215-381-11	s	RES,METAL FILM 22 1/4 W
R410	*2 DELETE		
R411	1-216-809-11	S	RESISTOR,CHIP 100 1/16W (1608)
R411	*1 1-215-381-11	S	RES,METAL FILM 22 1/4 W
R411	*2 1-216-801-11	s	RESISTOR,CHIP 22 1/16W (1608)
R412	1-216-797-11	s	RESISTOR,CHIP 10 1/16W 1608
R451	1-216-845-11	s	RESISTOR,CHIP 100K 1/16W(1608)
R452	1-216-845-11	s	RESISTOR,CHIP 100K 1/16W(1608)
R453	1-216-845-11	s	RESISTOR,CHIP 100K 1/16W(1608)
R454	1-216-845-11	s	RESISTOR,CHIP 100K 1/16W(1608)
R455	1-216-809-11	s	RESISTOR,CHIP 100 1/16W 1608
R456	1-216-809-11	s	RESISTOR,CHIP 100 1/16W 1608
R457	1-216-829-11	s	RESISTOR,CHIP 4.7K 1/16W(1608)
R458	1-216-833-11	s	RESISTOR,CHIP 10K 1/16W (1608)
R459	1-216-829-11	s	RESISTOR,CHIP 4.7K 1/16W(1608)
R460	1-216-833-11	s	RESISTOR,CHIP 10K 1/16W (1608)
R461	1-216-833-11	s	RESISTOR,CHIP 10K 1/16W (1608)
R462	1-216-833-11	s	RESISTOR,CHIP 10K 1/16W (1608)
R463	1-216-833-11	s	RESISTOR,CHIP 10K 1/16W (1608)
R464	1-216-833-11	s	RESISTOR,CHIP 10K 1/16W (1608)
R465	1-216-833-11	s	RESISTOR,CHIP 10K 1/16W (1608)
R466	1-216-833-11	s	RESISTOR,CHIP 10K 1/16W (1608)
R467	1-216-833-11	s	RESISTOR,CHIP 10K 1/16W (1608)
R468	1-216-833-11	s	RESISTOR,CHIP 10K 1/16W (1608)
R469	1-216-833-11	s	RESISTOR,CHIP 10K 1/16W (1608)
R470	1-216-833-11	s	RESISTOR,CHIP 10K 1/16W (1608)
R471	1-216-833-11	s	RESISTOR,CHIP 10K 1/16W (1608)
R472	1-216-833-11	s	RESISTOR,CHIP 10K 1/16W (1608)
R473	1-216-833-11	s	RESISTOR,CHIP 10K 1/16W (1608)
R474	1-216-833-11	s	RESISTOR,CHIP 10K 1/16W (1608)
R475	1-216-833-11	s	RESISTOR,CHIP 10K 1/16W (1608)
R476	1-216-833-11	s	RESISTOR,CHIP 10K 1/16W (1608)
R477	1-216-833-11	s	RESISTOR,CHIP 10K 1/16W (1608)

(DPR-175 BOARD (for DSR-1800/P))

Ref. No. or Q'ty	Part No.	SP	Description
R478	1-216-833-11	s	RESISTOR,CHIP 10K 1/16W (1608)
R479	1-216-833-11	s	RESISTOR,CHIP 10K 1/16W (1608)
R501	1-216-864-11	s	RESISTOR,CHIP 0 1/16W (1608)
R551	1-216-801-11	s	RESISTOR,CHIP 22 1/16W (1608)
R552	1-216-801-11	s	RESISTOR,CHIP 22 1/16W (1608)
R553	1-216-801-11	s	RESISTOR,CHIP 22 1/16W (1608)
R554	1-216-801-11	s	RESISTOR,CHIP 22 1/16W (1608)
R555	1-216-801-11	s	RESISTOR,CHIP 22 1/16W (1608)
R556	1-216-801-11	s	RESISTOR,CHIP 22 1/16W (1608)
R557	1-216-801-11	s	RESISTOR,CHIP 22 1/16W (1608)
R558	1-216-801-11	s	RESISTOR,CHIP 22 1/16W (1608)
R559	1-216-801-11	s	RESISTOR,CHIP 22 1/16W (1608)
R560	1-216-801-11	s	RESISTOR,CHIP 22 1/16W (1608)
R561	1-216-801-11	s	RESISTOR,CHIP 22 1/16W (1608)
R562	1-216-801-11	s	RESISTOR,CHIP 22 1/16W (1608)
R563	1-216-801-11	s	RESISTOR,CHIP 22 1/16W (1608)
R564	1-216-821-11	s	RESISTOR,CHIP 1.0K 1/16W(1608)
R565	1-216-821-11	s	RESISTOR,CHIP 1.0K 1/16W(1608)
R566	1-216-845-11	s	RESISTOR,CHIP 100K 1/16W(1608)
R567	1-216-864-11	s	RESISTOR,CHIP 0 1/16W (1608)
R568	1-216-864-11	s	RESISTOR,CHIP 0 1/16W (1608)
R569	1-216-801-11	s	RESISTOR,CHIP 22 1/16W (1608)
R570	1-216-864-11	s	RESISTOR,CHIP 0 1/16W (1608)
R571	1-216-864-11	s	RESISTOR,CHIP 0 1/16W (1608)
R572	1-216-864-11	s	RESISTOR,CHIP 0 1/16W (1608)
R573	1-216-864-11	s	RESISTOR,CHIP 0 1/16W (1608)
R574	1-216-864-11	s	RESISTOR,CHIP 0 1/16W (1608)
R575	1-216-864-11	s	RESISTOR,CHIP 0 1/16W (1608)
R576	1-216-864-11	s	RESISTOR,CHIP 0 1/16W (1608)
R577	1-216-864-11	s	RESISTOR,CHIP 0 1/16W (1608)
R578	1-216-864-11	s	RESISTOR,CHIP 0 1/16W (1608)
R579	1-216-864-11	s	RESISTOR,CHIP 0 1/16W (1608)
R580	1-216-864-11	s	RESISTOR,CHIP 0 1/16W (1608)
R581	1-216-864-11	s	RESISTOR,CHIP 0 1/16W (1608)
R582	1-216-864-11	s	RESISTOR,CHIP 0 1/16W (1608)
R583	1-216-845-11	s	RESISTOR,CHIP 100K 1/16W(1608)
R584	1-216-864-11	s	RESISTOR,CHIP 0 1/16W (1608)
R585	1-216-864-11	s	RESISTOR,CHIP 0 1/16W (1608)
R586	1-216-864-11	s	RESISTOR,CHIP 0 1/16W (1608)
R587	1-216-833-11	s	RESISTOR,CHIP 10K 1/16W (1608)
R588	1-216-833-11	s	RESISTOR,CHIP 10K 1/16W (1608)
R601	1-216-864-11	s	RESISTOR,CHIP 0 1/16W (1608)
R602	1-216-821-11	s	RESISTOR,CHIP 1.0K 1/16W(1608)
R603	1-218-904-11	s	RESISTOR,CHIP 240K 1/16W(1608)
R604	1-218-904-11	s	RESISTOR,CHIP 240K 1/16W(1608)
R605	1-216-837-11	s	RESISTOR,CHIP 22K 1/16W 1608
R606	1-216-829-11	s	RESISTOR,CHIP 4.7K 1/16W(1608)
R607	1-216-829-11	s	RESISTOR,CHIP 4.7K 1/16W(1608)
R612	1-216-805-11	s	RESISTOR,CHIP 47 1/16W 1608
R613	1-216-805-11	s	RESISTOR,CHIP 47 1/16W 1608
R614	1-216-805-11	s	RESISTOR,CHIP 47 1/16W 1608
R615	1-216-801-11	s	RESISTOR,CHIP 22 1/16W (1608)
R616	1-216-801-11	s	RESISTOR,CHIP 22 1/16W (1608)
R617	1-216-801-11	s	RESISTOR,CHIP 22 1/16W (1608)
R618	1-216-864-11	s	RESISTOR,CHIP 0 1/16W (1608)
R619	1-216-801-11	s	RESISTOR,CHIP 22 1/16W (1608)
R620	1-216-801-11	s	RESISTOR,CHIP 22 1/16W (1608)
R621	1-216-801-11	s	RESISTOR,CHIP 22 1/16W (1608)
R622	1-216-864-11	s	RESISTOR,CHIP 0 1/16W (1608)

http://getMANUAL.com

(DPR-175 BOARD (for DSR-1800/P))

Ref. No. or Q'ty	Part No.	SP	Description
R623	1-216-864-11	s	RESISTOR,CHIP 0 1/16W (1608)
R624	1-216-833-11	s	RESISTOR,CHIP 10K 1/16W (1608)
R625	1-216-833-11	s	RESISTOR,CHIP 10K 1/16W (1608)
R626	1-216-833-11	s	RESISTOR,CHIP 10K 1/16W (1608)
R627	1-216-801-11	s	RESISTOR,CHIP 22 1/16W (1608)
R628	1-216-801-11	s	RESISTOR,CHIP 22 1/16W (1608)
R629	1-216-801-11	s	RESISTOR,CHIP 22 1/16W (1608)
R630	1-216-801-11	s	RESISTOR,CHIP 22 1/16W (1608)
R631	1-216-801-11	s	RESISTOR,CHIP 22 1/16W (1608)
R632	1-216-864-11	s	RESISTOR,CHIP 0 1/16W (1608)
R633	1-216-864-11	s	RESISTOR,CHIP 0 1/16W (1608)
R634	1-216-801-11	s	RESISTOR,CHIP 22 1/16W (1608)
R651	1-216-801-11	s	RESISTOR,CHIP 22 1/16W (1608)
R652	1-216-801-11	s	RESISTOR,CHIP 22 1/16W (1608)
R653	1-216-864-11	s	RESISTOR,CHIP 0 1/16W (1608)
R654	1-216-864-11	s	RESISTOR,CHIP 0 1/16W (1608)
R655	1-216-864-11	s	RESISTOR,CHIP 0 1/16W (1608)
R656	1-216-864-11	s	RESISTOR,CHIP 0 1/16W (1608)
R657	1-216-801-11	s	RESISTOR,CHIP 22 1/16W (1608)
R658	1-216-801-11	s	RESISTOR,CHIP 22 1/16W (1608)
R659	1-216-801-11	s	RESISTOR,CHIP 22 1/16W (1608)
R660	1-216-801-11	s	RESISTOR,CHIP 22 1/16W (1608)
R661	1-216-801-11	s	RESISTOR,CHIP 22 1/16W (1608)
R662	1-216-833-11	s	RESISTOR,CHIP 10K 1/16W (1608)
R663	1-216-864-11	s	RESISTOR,CHIP 0 1/16W (1608)
R664	1-216-801-11	s	RESISTOR,CHIP 22 1/16W (1608)
R665	1-216-801-11	s	RESISTOR,CHIP 22 1/16W (1608)
R666	1-216-801-11	s	RESISTOR,CHIP 22 1/16W (1608)
R667	1-216-801-11	s	RESISTOR,CHIP 22 1/16W (1608)
R668	1-216-801-11	s	RESISTOR,CHIP 22 1/16W (1608)
R669	1-216-801-11	s	RESISTOR,CHIP 22 1/16W (1608)
R670	1-216-801-11	s	RESISTOR,CHIP 22 1/16W (1608)
R671	1-216-845-11	s	RESISTOR,CHIP 100K 1/16W(1608)
R672	1-216-845-11	s	RESISTOR,CHIP 100K 1/16W(1608)
R673	1-216-845-11	s	RESISTOR,CHIP 100K 1/16W(1608)
R674	1-216-864-11	s	RESISTOR,CHIP 0 1/16W (1608)
R675	1-216-864-11	s	RESISTOR,CHIP 0 1/16W (1608)
R676	1-216-864-11	s	RESISTOR,CHIP 0 1/16W (1608)
R677	1-216-864-11	s	RESISTOR,CHIP 0 1/16W (1608)
R678	1-216-845-11	s	RESISTOR,CHIP 100K 1/16W(1608)
R679	1-216-864-11	s	RESISTOR,CHIP 0 1/16W (1608)
R680	1-216-864-11	s	RESISTOR,CHIP 0 1/16W (1608)
R681	1-216-864-11	s	RESISTOR,CHIP 0 1/16W (1608)
R682	1-216-864-11	s	RESISTOR,CHIP 0 1/16W (1608)
R683	1-216-833-11	s	RESISTOR,CHIP 10K 1/16W (1608)
R684	1-216-833-11	s	RESISTOR,CHIP 10K 1/16W (1608)
R685	1-216-801-11	s	RESISTOR,CHIP 22 1/16W (1608)
R686	1-216-801-11	s	RESISTOR,CHIP 22 1/16W (1608)
R687	1-216-801-11	s	RESISTOR,CHIP 22 1/16W (1608)
R688	1-216-845-11	s	RESISTOR,CHIP 100K 1/16W(1608)
R689	1-216-864-11	s	RESISTOR,CHIP 0 1/16W (1608)
R690	1-216-864-11	s	RESISTOR,CHIP 0 1/16W (1608)
R691	1-216-845-11	s	RESISTOR,CHIP 100K 1/16W(1608)
R692	1-216-864-11	s	RESISTOR,CHIP 0 1/16W (1608)
R693	1-216-864-11	s	RESISTOR,CHIP 0 1/16W (1608)
R694	1-216-864-11	s	RESISTOR,CHIP 0 1/16W (1608)
R695	1-216-833-11	s	RESISTOR,CHIP 10K 1/16W (1608)
R696	1-216-864-11	s	RESISTOR,CHIP 0 1/16W (1608)
R697	1-216-864-11	s	RESISTOR,CHIP 0 1/16W (1608)

(DPR-175 BOARD (for DSR-1800/P))

Ref. No. or Q'ty	Part No.	SP	Description
R698	1-216-864-11	s	RESISTOR,CHIP 0 1/16W (1608)
R699	1-216-864-11	s	RESISTOR,CHIP 0 1/16W (1608)
R700	1-216-864-11	s	RESISTOR,CHIP 0 1/16W (1608)
R701	1-216-833-11	s	RESISTOR,CHIP 10K 1/16W (1608)
R702	1-216-845-11	s	RESISTOR,CHIP 100K 1/16W(1608)
R703	1-216-801-11	s	RESISTOR,CHIP 22 1/16W (1608)
R704	1-216-864-11	s	RESISTOR,CHIP 0 1/16W (1608)
R705	1-216-864-11	s	RESISTOR,CHIP 0 1/16W (1608)
R706	1-216-864-11	s	RESISTOR,CHIP 0 1/16W (1608)
R707	1-216-864-11	s	RESISTOR,CHIP 0 1/16W (1608)
R708	1-216-845-11	s	RESISTOR,CHIP 100K 1/16W(1608)
R709	1-216-864-11	s	RESISTOR,CHIP 0 1/16W (1608)
R710	1-216-864-11	s	RESISTOR,CHIP 0 1/16W (1608)
R711	1-216-801-11	s	RESISTOR,CHIP 22 1/16W (1608)
R712	1-216-801-11	s	RESISTOR,CHIP 22 1/16W (1608)
R713	1-216-833-11	s	RESISTOR,CHIP 10K 1/16W (1608)
R714	1-216-833-11	s	RESISTOR,CHIP 10K 1/16W (1608)
R751	1-216-821-11	s	RESISTOR,CHIP 1.0K 1/16W(1608)
R752	1-216-821-11	s	RESISTOR,CHIP 1.0K 1/16W(1608)
R753	1-216-801-11	s	RESISTOR,CHIP 22 1/16W (1608)
R754	1-216-801-11	s	RESISTOR,CHIP 22 1/16W (1608)
R755	1-216-801-11	s	RESISTOR,CHIP 22 1/16W (1608)
R756	1-216-845-11	s	RESISTOR,CHIP 100K 1/16W(1608)
R757	1-216-801-11	s	RESISTOR,CHIP 22 1/16W (1608)
R758	1-216-801-11	s	RESISTOR,CHIP 22 1/16W (1608)
R759	1-216-801-11	s	RESISTOR,CHIP 22 1/16W (1608)
R760	1-216-801-11	s	RESISTOR,CHIP 22 1/16W (1608)
R761	1-216-801-11	s	RESISTOR,CHIP 22 1/16W (1608)
R762	1-216-801-11	s	RESISTOR,CHIP 22 1/16W (1608)
R763	1-216-801-11	s	RESISTOR,CHIP 22 1/16W (1608)
R764	1-216-801-11	s	RESISTOR,CHIP 22 1/16W (1608)
R765	1-216-801-11	s	RESISTOR,CHIP 22 1/16W (1608)
R766	1-216-801-11	s	RESISTOR,CHIP 22 1/16W (1608)
R767	1-216-801-11	s	RESISTOR,CHIP 22 1/16W (1608)
R768	1-216-801-11	s	RESISTOR,CHIP 22 1/16W (1608)
R769	1-216-801-11	s	RESISTOR,CHIP 22 1/16W (1608)
R770	1-216-801-11	s	RESISTOR,CHIP 22 1/16W (1608)
R771	1-216-801-11	s	RESISTOR,CHIP 22 1/16W (1608)
R772	1-216-801-11	s	RESISTOR,CHIP 22 1/16W (1608)
R773	1-216-801-11	s	RESISTOR,CHIP 22 1/16W (1608)
R774	1-216-801-11	s	RESISTOR,CHIP 22 1/16W (1608)
R775	1-218-874-11	s	RESISTOR,CHIP 13K 1/16W (1608)
R776	1-216-839-11	s	RESISTOR,CHIP 33K 1/16W 1608
R777	1-218-874-11	s	RESISTOR,CHIP 13K 1/16W (1608)
R778	1-216-839-11	s	RESISTOR,CHIP 33K 1/16W 1608
R779	1-216-841-11	s	RESISTOR, CHIP 47K 1/16W 1608
R780	1-216-841-11	s	RESISTOR, CHIP 47K 1/16W 1608
R781	1-216-829-11	s	RESISTOR,CHIP 4.7K 1/16W(1608)
R782	1-216-829-11	s	RESISTOR,CHIP 4.7K 1/16W(1608)
R783	1-216-801-11	s	RESISTOR,CHIP 22 1/16W (1608)
R784	1-216-801-11	s	RESISTOR,CHIP 22 1/16W (1608)
R785	1-216-801-11	s	RESISTOR,CHIP 22 1/16W (1608)
R786	1-216-841-11	s	RESISTOR, CHIP 47K 1/16W 1608
R787	1-216-841-11	s	RESISTOR, CHIP 47K 1/16W 1608
R788	1-216-835-11	s	RESISTOR,CHIP 15K 1/16W
R789	1-216-835-11	s	RESISTOR,CHIP 15K 1/16W
R790	1-216-841-11	s	RESISTOR, CHIP 47K 1/16W 1608
R791	1-216-841-11	s	RESISTOR, CHIP 47K 1/16W 1608
R792	1-216-841-11	s	RESISTOR, CHIP 47K 1/16W 1608

(DPR-175 BOARD (for DSR-1800/P))

Ref. No. or Q'ty	Part No.	SP	Description
R793	1-216-841-11	s	RESISTOR, CHIP 47K 1/16W 1608
R794	1-216-841-11	s	RESISTOR, CHIP 47K 1/16W 1608
R795	1-216-841-11	s	RESISTOR, CHIP 47K 1/16W 1608
R796	1-216-801-11	s	RESISTOR,CHIP 22 1/16W (1608)
R797	1-216-801-11	s	RESISTOR,CHIP 22 1/16W (1608)
R798	1-216-801-11	s	RESISTOR,CHIP 22 1/16W (1608)
R799	1-216-801-11	s	RESISTOR,CHIP 22 1/16W (1608)
R800	1-216-801-11	s	RESISTOR,CHIP 22 1/16W (1608)
R801	1-216-801-11	s	RESISTOR,CHIP 22 1/16W (1608)
R802	1-216-801-11	s	RESISTOR,CHIP 22 1/16W (1608)
R803	1-216-801-11	s	RESISTOR,CHIP 22 1/16W (1608)
R804	1-216-801-11	s	RESISTOR,CHIP 22 1/16W (1608)
R805	1-216-801-11	s	RESISTOR,CHIP 22 1/16W (1608)
R806	1-216-801-11	s	RESISTOR,CHIP 22 1/16W (1608)
R807	1-216-801-11	s	RESISTOR,CHIP 22 1/16W (1608)
R808	1-216-801-11	s	RESISTOR,CHIP 22 1/16W (1608)
R809	1-216-801-11	s	RESISTOR,CHIP 22 1/16W (1608)
R810	1-216-801-11	s	RESISTOR,CHIP 22 1/16W (1608)
R811	1-216-801-11	s	RESISTOR,CHIP 22 1/16W (1608)
R812	1-216-801-11	s	RESISTOR,CHIP 22 1/16W (1608)
R813	1-216-801-11	s	RESISTOR,CHIP 22 1/16W (1608)
R814	1-216-801-11	s	RESISTOR,CHIP 22 1/16W (1608)
R815	1-216-801-11	s	RESISTOR,CHIP 22 1/16W (1608)
R816	1-216-801-11	s	RESISTOR,CHIP 22 1/16W (1608)
R817	1-216-801-11	s	RESISTOR,CHIP 22 1/16W (1608)
R818	1-216-801-11	s	RESISTOR,CHIP 22 1/16W (1608)
R819	1-216-801-11	s	RESISTOR,CHIP 22 1/16W (1608)
R820	1-216-801-11	s	RESISTOR,CHIP 22 1/16W (1608)
R821	1-216-801-11	s	RESISTOR,CHIP 22 1/16W (1608)
R822	1-216-801-11	s	RESISTOR,CHIP 22 1/16W (1608)
R823	1-216-801-11	s	RESISTOR,CHIP 22 1/16W (1608)
R824	1-216-801-11	s	RESISTOR,CHIP 22 1/16W (1608)
R825	1-216-801-11	s	RESISTOR,CHIP 22 1/16W (1608)
R826	1-216-801-11	s	RESISTOR,CHIP 22 1/16W (1608)
R827	1-216-801-11	s	RESISTOR,CHIP 22 1/16W (1608)
R828	1-216-801-11	s	RESISTOR,CHIP 22 1/16W (1608)
R829	1-216-801-11	s	RESISTOR,CHIP 22 1/16W (1608)
R830	1-216-801-11	s	RESISTOR,CHIP 22 1/16W (1608)
R830 *1	1-218-831-11	s	RESISTOR, CHIP 220 1/16W(1608)
R831	1-216-801-11	s	RESISTOR,CHIP 22 1/16W (1608)
R831 *1	1-218-831-11	s	RESISTOR, CHIP 220 1/16W(1608)
R832	1-216-801-11	s	RESISTOR,CHIP 22 1/16W (1608)
R833	1-216-801-11	s	RESISTOR,CHIP 22 1/16W (1608)
R834	1-216-801-11	s	RESISTOR,CHIP 22 1/16W (1608)
R835	1-216-801-11	s	RESISTOR,CHIP 22 1/16W (1608)
R836	1-216-801-11	s	RESISTOR,CHIP 22 1/16W (1608)
R837	1-216-801-11	s	RESISTOR,CHIP 22 1/16W (1608)
R838	1-216-801-11	s	RESISTOR,CHIP 22 1/16W (1608)
R839	1-216-801-11	s	RESISTOR,CHIP 22 1/16W (1608)
R840	1-216-801-11	s	RESISTOR,CHIP 22 1/16W (1608)
R841	1-216-801-11	s	RESISTOR,CHIP 22 1/16W (1608)
R842	1-216-801-11	s	RESISTOR,CHIP 22 1/16W (1608)
R843	1-216-801-11	s	RESISTOR,CHIP 22 1/16W (1608)
R844	1-216-809-11	s	RESISTOR,CHIP 100 1/16W 1608
R845	1-216-809-11	s	RESISTOR,CHIP 100 1/16W 1608
R846	1-216-833-11	s	RESISTOR,CHIP 10K 1/16W (1608)
R847 *2	1-216-801-11	s	RESISTOR,CHIP 22 1/16W (1608)
R848 *2	1-216-801-11	s	RESISTOR,CHIP 22 1/16W (1608)
R901	1-216-801-11	s	RESISTOR,CHIP 22 1/16W (1608)

(DPR-175 BOARD (for DSR-1800/P))

Ref. No. or Q'ty	Part No.	SP	Description
R902	1-216-801-11	s	RESISTOR,CHIP 22 1/16W (1608)
R903	1-216-801-11	s	RESISTOR,CHIP 22 1/16W (1608)
R904	1-216-801-11	s	RESISTOR,CHIP 22 1/16W (1608)
R905	1-216-801-11	s	RESISTOR,CHIP 22 1/16W (1608)
R906	1-216-801-11	s	RESISTOR,CHIP 22 1/16W (1608)
R907	1-216-801-11	s	RESISTOR,CHIP 22 1/16W (1608)
R908	1-216-801-11	s	RESISTOR,CHIP 22 1/16W (1608)
R909	1-216-801-11	s	RESISTOR,CHIP 22 1/16W (1608)
R910	1-216-801-11	s	RESISTOR,CHIP 22 1/16W (1608)
R911	1-216-801-11	s	RESISTOR,CHIP 22 1/16W (1608)
R912	1-216-801-11	s	RESISTOR,CHIP 22 1/16W (1608)
R913	1-216-801-11	s	RESISTOR,CHIP 22 1/16W (1608)
R914	1-216-801-11	s	RESISTOR,CHIP 22 1/16W (1608)
R915	1-216-801-11	s	RESISTOR,CHIP 22 1/16W (1608)
R916	1-216-801-11	s	RESISTOR,CHIP 22 1/16W (1608)
R917	1-216-801-11	s	RESISTOR,CHIP 22 1/16W (1608)
R918	1-216-801-11	s	RESISTOR,CHIP 22 1/16W (1608)
R919	1-216-801-11	s	RESISTOR,CHIP 22 1/16W (1608)
R920	1-216-801-11	s	RESISTOR,CHIP 22 1/16W (1608)
R921	1-216-801-11	s	RESISTOR,CHIP 22 1/16W (1608)
R922	1-216-801-11	s	RESISTOR,CHIP 22 1/16W (1608)
R923	1-216-801-11	s	RESISTOR,CHIP 22 1/16W (1608)
R924	1-216-801-11	s	RESISTOR,CHIP 22 1/16W (1608)
R925	1-216-801-11	s	RESISTOR,CHIP 22 1/16W (1608)
R926	1-216-801-11	s	RESISTOR,CHIP 22 1/16W (1608)
R927	1-216-801-11	s	RESISTOR,CHIP 22 1/16W (1608)
R928	1-216-801-11	s	RESISTOR,CHIP 22 1/16W (1608)
R929	1-216-801-11	s	RESISTOR,CHIP 22 1/16W (1608)
R930	1-216-801-11	s	RESISTOR,CHIP 22 1/16W (1608)
R931	1-216-801-11	s	RESISTOR,CHIP 22 1/16W (1608)
R932	1-216-801-11	s	RESISTOR,CHIP 22 1/16W (1608)
R933	1-216-801-11	s	RESISTOR,CHIP 22 1/16W (1608)
R934	1-216-801-11	s	RESISTOR,CHIP 22 1/16W (1608)
R935	1-216-801-11	s	RESISTOR,CHIP 22 1/16W (1608)
R936	1-216-801-11	s	RESISTOR,CHIP 22 1/16W (1608)
R937	1-216-801-11	s	RESISTOR,CHIP 22 1/16W (1608)
R938	1-216-801-11	s	RESISTOR,CHIP 22 1/16W (1608)
R939	1-216-801-11	s	RESISTOR,CHIP 22 1/16W (1608)
R940	1-216-801-11	s	RESISTOR,CHIP 22 1/16W (1608)
R941	1-216-801-11	s	RESISTOR,CHIP 22 1/16W (1608)
R942	1-216-801-11	s	RESISTOR,CHIP 22 1/16W (1608)
R943	1-216-801-11	s	RESISTOR,CHIP 22 1/16W (1608)
R944	1-216-801-11	s	RESISTOR,CHIP 22 1/16W (1608)
R945	1-216-801-11	s	RESISTOR,CHIP 22 1/16W (1608)
R946	1-216-801-11	s	RESISTOR,CHIP 22 1/16W (1608)
R947	1-216-801-11	s	RESISTOR,CHIP 22 1/16W (1608)
R948	1-216-801-11	s	RESISTOR,CHIP 22 1/16W (1608)
R949	1-216-801-11	s	RESISTOR,CHIP 22 1/16W (1608)
R950	1-216-801-11	s	RESISTOR,CHIP 22 1/16W (1608)
R951	1-216-801-11	s	RESISTOR,CHIP 22 1/16W (1608)
R952	1-216-801-11	s	RESISTOR,CHIP 22 1/16W (1608)
R953	1-216-801-11	s	RESISTOR,CHIP 22 1/16W (1608)
R954	1-216-801-11	s	RESISTOR,CHIP 22 1/16W (1608)
R955	1-216-801-11	s	RESISTOR,CHIP 22 1/16W (1608)
R956	1-216-801-11	s	RESISTOR,CHIP 22 1/16W (1608)
R957	1-216-801-11	s	RESISTOR,CHIP 22 1/16W (1608)
R958	1-216-801-11	s	RESISTOR,CHIP 22 1/16W (1608)
R959	1-216-801-11	s	RESISTOR,CHIP 22 1/16W (1608)
R960	1-216-801-11	s	RESISTOR,CHIP 22 1/16W (1608)

(DPR-175 BOARD (for DSR-1800/P))

Ref. No. or Q'ty	Part No.	SP	Description
R961	1-216-801-11	s	RESISTOR,CHIP 22 1/16W (1608)
R962	1-216-801-11	s	RESISTOR,CHIP 22 1/16W (1608)
R963	1-216-801-11	s	RESISTOR,CHIP 22 1/16W (1608)
R964	1-216-801-11	s	RESISTOR,CHIP 22 1/16W (1608)
R965	1-216-801-11	s	RESISTOR,CHIP 22 1/16W (1608)
R966	1-216-801-11	s	RESISTOR,CHIP 22 1/16W (1608)
R967	1-216-801-11	s	RESISTOR,CHIP 22 1/16W (1608)
R968	1-216-801-11	s	RESISTOR,CHIP 22 1/16W (1608)
R969	1-216-801-11	s	RESISTOR,CHIP 22 1/16W (1608)
R970	1-216-801-11	s	RESISTOR,CHIP 22 1/16W (1608)
R971	1-216-801-11	s	RESISTOR,CHIP 22 1/16W (1608)
R972	1-216-801-11	s	RESISTOR,CHIP 22 1/16W (1608)
R973	1-216-801-11	s	RESISTOR,CHIP 22 1/16W (1608)
R974	1-216-801-11	s	RESISTOR,CHIP 22 1/16W (1608)
R975	1-216-801-11	s	RESISTOR,CHIP 22 1/16W (1608)
R976	1-216-801-11	s	RESISTOR,CHIP 22 1/16W (1608)
R977	1-216-801-11	s	RESISTOR,CHIP 22 1/16W (1608)
R978	1-216-801-11	s	RESISTOR,CHIP 22 1/16W (1608)
R979	1-216-801-11	s	RESISTOR,CHIP 22 1/16W (1608)
R980	1-216-801-11	s	RESISTOR,CHIP 22 1/16W (1608)
R981	1-216-801-11	s	RESISTOR,CHIP 22 1/16W (1608)
R982	1-216-801-11	s	RESISTOR,CHIP 22 1/16W (1608)
R983	1-216-801-11	s	RESISTOR,CHIP 22 1/16W (1608)
R984	1-216-801-11	s	RESISTOR,CHIP 22 1/16W (1608)
R985	1-216-801-11	s	RESISTOR,CHIP 22 1/16W (1608)
R986	1-216-801-11	s	RESISTOR,CHIP 22 1/16W (1608)
R987	1-216-801-11	s	RESISTOR,CHIP 22 1/16W (1608)
R988	1-216-801-11	s	RESISTOR,CHIP 22 1/16W (1608)
R989	1-216-801-11	s	RESISTOR,CHIP 22 1/16W (1608)
R990	1-216-801-11	s	RESISTOR,CHIP 22 1/16W (1608)
R991	1-216-801-11	s	RESISTOR,CHIP 22 1/16W (1608)
R992	1-216-801-11	s	RESISTOR,CHIP 22 1/16W (1608)
R993	1-216-801-11	s	RESISTOR,CHIP 22 1/16W (1608)
R994	1-216-801-11	s	RESISTOR,CHIP 22 1/16W (1608)
R995	1-216-801-11	s	RESISTOR,CHIP 22 1/16W (1608)
R996	1-216-801-11	s	RESISTOR,CHIP 22 1/16W (1608)
R997	1-216-801-11	s	RESISTOR,CHIP 22 1/16W (1608)
R998	1-216-801-11	s	RESISTOR,CHIP 22 1/16W (1608)
R999	1-216-801-11	s	RESISTOR,CHIP 22 1/16W (1608)
R1000	1-216-801-11	s	RESISTOR,CHIP 22 1/16W (1608)
R1001	1-216-801-11	s	RESISTOR,CHIP 22 1/16W (1608)
R1002	1-216-801-11	s	RESISTOR,CHIP 22 1/16W (1608)
R1003	1-216-801-11	s	RESISTOR,CHIP 22 1/16W (1608)
R1004	1-216-801-11	s	RESISTOR,CHIP 22 1/16W (1608)
R1005	1-216-801-11	s	RESISTOR,CHIP 22 1/16W (1608)
R1006	1-216-801-11	s	RESISTOR,CHIP 22 1/16W (1608)
R1007	1-216-801-11	s	RESISTOR,CHIP 22 1/16W (1608)
R1008	1-216-801-11	s	RESISTOR,CHIP 22 1/16W (1608)
R1009	1-216-801-11	s	RESISTOR,CHIP 22 1/16W (1608)
R1010	1-216-801-11	s	RESISTOR,CHIP 22 1/16W (1608)
R1011	1-216-801-11	s	RESISTOR,CHIP 22 1/16W (1608)
R1012	1-216-801-11	s	RESISTOR,CHIP 22 1/16W (1608)
R1013	1-216-801-11	s	RESISTOR,CHIP 22 1/16W (1608)
R1014	1-216-801-11	s	RESISTOR,CHIP 22 1/16W (1608)
R1015	1-216-801-11	s	RESISTOR,CHIP 22 1/16W (1608)
R1016	1-216-801-11	s	RESISTOR,CHIP 22 1/16W (1608)
R1017	1-216-801-11	s	RESISTOR,CHIP 22 1/16W (1608)
R1018	1-216-801-11	s	RESISTOR,CHIP 22 1/16W (1608)
R1019	1-216-801-11	s	RESISTOR,CHIP 22 1/16W (1608)

(DPR-175 BOARD (for DSR-1800/P))

Ref. No. or Q'ty	Part No.	SP	Description
R1020	1-216-801-11	s	RESISTOR,CHIP 22 1/16W (1608)
R1021	1-216-801-11	s	RESISTOR,CHIP 22 1/16W (1608)
R1022	1-216-801-11	s	RESISTOR,CHIP 22 1/16W (1608)
R1023	1-216-801-11	s	RESISTOR,CHIP 22 1/16W (1608)
R1024	1-216-801-11	s	RESISTOR,CHIP 22 1/16W (1608)
R1025	1-216-801-11	s	RESISTOR,CHIP 22 1/16W (1608)
R1026	1-216-801-11	s	RESISTOR,CHIP 22 1/16W (1608)
R1027	1-216-801-11	s	RESISTOR,CHIP 22 1/16W (1608)
R1028	1-216-801-11	s	RESISTOR,CHIP 22 1/16W (1608)
R1029	1-216-801-11	s	RESISTOR,CHIP 22 1/16W (1608)
R1030	1-216-801-11	s	RESISTOR,CHIP 22 1/16W (1608)
R1031	1-216-801-11	s	RESISTOR,CHIP 22 1/16W (1608)
R1032	1-216-801-11	s	RESISTOR,CHIP 22 1/16W (1608)
R1033	1-216-801-11	s	RESISTOR,CHIP 22 1/16W (1608)
R1034	1-216-801-11	s	RESISTOR,CHIP 22 1/16W (1608)
R1035	1-216-801-11	s	RESISTOR,CHIP 22 1/16W (1608)
R1036	1-216-801-11	s	RESISTOR,CHIP 22 1/16W (1608)
R1037	1-216-801-11	s	RESISTOR,CHIP 22 1/16W (1608)
R1038	1-216-801-11	s	RESISTOR,CHIP 22 1/16W (1608)
R1039	1-216-801-11	s	RESISTOR,CHIP 22 1/16W (1608)
R1040	1-216-801-11	s	RESISTOR,CHIP 22 1/16W (1608)
R1041	1-216-801-11	s	RESISTOR,CHIP 22 1/16W (1608)
R1042	1-216-801-11	s	RESISTOR,CHIP 22 1/16W (1608)
R1043	1-216-801-11	s	RESISTOR,CHIP 22 1/16W (1608)
R1044	1-216-801-11	s	RESISTOR,CHIP 22 1/16W (1608)
R1045	1-216-801-11	s	RESISTOR,CHIP 22 1/16W (1608)
RB601	1-239-412-11	s	NETWORK, RESISTOR 100 (1608)
X351	1-767-449-11	s	VIBRATOR, CRYSTAL
X651	1-795-007-11	s	OSCILLATOR, CRYSTAL

DR-428 BOARD
---

*1: Lot No.091 and higher
*2: Lot No.092 and higher

Ref. No. or Q'ty	Part No.	SP	Description
C1	1-162-964-11	s	CAPACITOR,CERAMIC 1000PF/50V B
C2	1-162-964-11	s	CAPACITOR,CERAMIC 1000PF/50V B
C3	1-162-964-11	s	CAPACITOR,CERAMIC 1000PF/50V B
C4	1-162-964-11	s	CAPACITOR,CERAMIC 1000PF/50V B
C5	1-162-964-11	s	CAPACITOR,CERAMIC 1000PF/50V B
C6	1-162-964-11	s	CAPACITOR,CERAMIC 1000PF/50V B
C7	1-162-964-11	s	CAPACITOR,CERAMIC 1000PF/50V B
C8	1-162-964-11	s	CAPACITOR,CERAMIC 1000PF/50V B
C9	1-162-964-11	s	CAPACITOR,CERAMIC 1000PF/50V B
C10	1-164-156-11	s	CAPACITOR,CERAMIC 0.1MF/25V F
C11	1-162-964-11	s	CAPACITOR,CERAMIC 1000PF/50V B
C12	1-162-964-11	s	CAPACITOR,CERAMIC 1000PF/50V B
C13	1-162-964-11	s	CAPACITOR,CERAMIC 1000PF/50V B
C14	1-135-177-21	s	CAPACITOR TANTALUM 1MF/25V
C15	1-164-156-11	s	CAPACITOR,CERAMIC 0.1MF/25V F
C16	1-164-156-11	s	CAPACITOR,CERAMIC 0.1MF/25V F
C17	1-164-156-11	s	CAPACITOR,CERAMIC 0.1MF/25V F
C18	1-162-968-11	s	CAPACITOR,CERAMIC 4700PF/50V B
C19	1-164-156-11	s	CAPACITOR,CERAMIC 0.1MF/25V F
C25	1-164-156-11	s	CAPACITOR,CERAMIC 0.1MF/25V F
C26	1-162-964-11	s	CAPACITOR,CERAMIC 1000PF/50V B
C27	1-162-919-11	s	CAPACITOR,CERAMIC 22PF/50V CH
C28	1-162-919-11	s	CAPACITOR,CERAMIC 22PF/50V CH
C29	1-164-156-11	s	CAPACITOR,CERAMIC 0.1MF/25V F
C30	1-164-156-11	s	CAPACITOR,CERAMIC 0.1MF/25V F
C31	1-164-156-11	s	CAPACITOR,CERAMIC 0.1MF/25V F
C32	1-164-156-11	s	CAPACITOR,CERAMIC 0.1MF/25V F
C33	1-164-156-11	s	CAPACITOR,CERAMIC 0.1MF/25V F
C34	1-162-964-11	s	CAPACITOR,CERAMIC 1000PF/50V B
C101	1-164-156-11	s	CAPACITOR,CERAMIC 0.1MF/25V F
C102	1-164-156-11	s	CAPACITOR,CERAMIC 0.1MF/25V F
C103	1-164-156-11	s	CAPACITOR,CERAMIC 0.1MF/25V F
C104	1-164-156-11	s	CAPACITOR,CERAMIC 0.1MF/25V F
C105	1-164-156-11	s	CAPACITOR,CERAMIC 0.1MF/25V F
C106	1-164-156-11	s	CAPACITOR,CERAMIC 0.1MF/25V F
C107	1-164-156-11	s	CAPACITOR,CERAMIC 0.1MF/25V F
C108	1-164-156-11	s	CAPACITOR,CERAMIC 0.1MF/25V F
C201	1-164-156-11	s	CAPACITOR,CERAMIC 0.1MF/25V F
C202	1-126-390-11	s	CAPACITOR ELECT 22MF/6.3V(105)
C203	1-162-959-11	s	CAPACITOR,CERAMIC 330PF/50V SL
C204	1-162-927-11	s	CAPACITOR,CERAMIC 100PF/50V CH
C205	1-162-968-11	s	CAPACITOR,CERAMIC 4700PF/50V B
C206	1-164-677-11	s	CAPACITOR,CERAMIC 0.033MF/16V
C207	1-104-851-11	s	CAPACITOR,TANTALUM 10MF/10V
C208	1-135-177-21	s	CAPACITOR TANTALUM 1MF/25V
C209	1-164-315-11	s	CAPACITOR,CERAMIC 470PF/50V CH
C210	1-162-970-11	s	CAPACITOR CERAMIC 0.01MF/25V B
C212	1-164-218-11	s	CAPACITOR,CERAMIC 180PF/50V CH
C213	1-164-218-11	s	CAPACITOR,CERAMIC 180PF/50V CH
C214	1-164-227-11	s	CAPACITOR,CERAMIC 0.022MF/25V
C215	1-162-969-11	s	CAPACITOR,CERAMIC 6800PF/25V B
C216	1-162-967-11	s	CAPACITOR,CERAMIC 3300PF/50V B
C217	1-162-969-11	s	CAPACITOR,CERAMIC 6800PF/25V B
C218	1-135-600-11	s	CAPACITOR,ELECT 22M 20V
C219	1-162-964-11	s	CAPACITOR,CERAMIC 1000PF/50V B
C220	1-162-968-11	s	CAPACITOR,CERAMIC 4700PF/50V B
C221	1-109-892-11	s	CAPACITOR ERECT 47MF/25V(105C)

(DR-428 BOARD)

Ref. No. or Q'ty	Part No.	SP	Description
C222	1-164-156-11	s	CAPACITOR,CERAMIC 0.1MF/25V F
C223	1-164-156-11	s	CAPACITOR,CERAMIC 0.1MF/25V F
C224	1-164-156-11	s	CAPACITOR,CERAMIC 0.1MF/25V F
C225	1-162-967-11	s	CAPACITOR,CERAMIC 3300PF/50V B
C226	1-162-967-11	s	CAPACITOR,CERAMIC 3300PF/50V B
C227	1-164-156-11	s	CAPACITOR,CERAMIC 0.1MF/25V F
C228	1-164-156-11	s	CAPACITOR,CERAMIC 0.1MF/25V F
C229	1-164-156-11	s	CAPACITOR,CERAMIC 0.1MF/25V F
C230	1-162-924-11	s	CAPACITOR,CERAMIC 56PF/50V CH
C231	1-162-967-11	s	CAPACITOR,CERAMIC 3300PF/50V B
C232	1-162-969-11	s	CAPACITOR,CERAMIC 6800PF/25V B
C233	1-162-968-11	s	CAPACITOR,CERAMIC 4700PF/50V B
C234	1-109-892-11	s	CAPACITOR ERECT 47MF/25V(105C)
C235	1-164-156-11	s	CAPACITOR,CERAMIC 0.1MF/25V F
C236	1-164-156-11	s	CAPACITOR,CERAMIC 0.1MF/25V F
C237	1-164-156-11	s	CAPACITOR,CERAMIC 0.1MF/25V F
C238	1-162-964-11	s	CAPACITOR,CERAMIC 1000PF/50V B
C239	1-162-964-11	s	CAPACITOR,CERAMIC 1000PF/50V B
C240	1-164-156-11	s	CAPACITOR,CERAMIC 0.1MF/25V F
C241	1-164-156-11	s	CAPACITOR,CERAMIC 0.1MF/25V F
C242	1-164-156-11	s	CAPACITOR,CERAMIC 0.1MF/25V F
C243	1-164-156-11	s	CAPACITOR,CERAMIC 0.1MF/25V F
C244	1-164-156-11	s	CAPACITOR,CERAMIC 0.1MF/25V F
C245	1-164-156-11	s	CAPACITOR,CERAMIC 0.1MF/25V F
C246	1-164-156-11	s	CAPACITOR,CERAMIC 0.1MF/25V F
C248	1-164-156-11	s	CAPACITOR,CERAMIC 0.1MF/25V F
C249	1-126-394-11	s	CAPACITOR,ELECT 10MF/16V(CHIP)
C250	1-164-156-11	s	CAPACITOR,CERAMIC 0.1MF/25V F
C251	1-164-156-11	s	CAPACITOR,CERAMIC 0.1MF/25V F
C253	1-164-156-11	s	CAPACITOR,CERAMIC 0.1MF/25V F
C255	1-135-600-11	s	CAPACITOR,ELECT 22M 20V
C256	1-164-156-11	s	CAPACITOR,CERAMIC 0.1MF/25V F
C301	1-162-970-11	s	CAPACITOR CERAMIC 0.01MF/25V B
C302	1-162-923-11	s	CAPACITOR,CERAMIC 47PF/50V CH
C303	1-164-156-11	s	CAPACITOR,CERAMIC 0.1MF/25V F
C304	1-162-923-11	s	CAPACITOR,CERAMIC 47PF/50V CH
C305	1-162-970-11	s	CAPACITOR CERAMIC 0.01MF/25V B
C306	1-162-923-11	s	CAPACITOR,CERAMIC 47PF/50V CH
C307	1-164-156-11	s	CAPACITOR,CERAMIC 0.1MF/25V F
C308	1-162-923-11	s	CAPACITOR,CERAMIC 47PF/50V CH
C309	1-165-176-11	s	CAPACITOR,CERAMIC 47000PF/16V
C310	1-164-315-11	s	CAPACITOR,CERAMIC 470PF/50V CH
C311	1-162-969-11	s	CAPACITOR,CERAMIC 6800PF/25V B
C312	1-135-600-11	s	CAPACITOR,ELECT 22M 20V
C313	1-162-964-11	s	CAPACITOR,CERAMIC 1000PF/50V B
C314	1-162-968-11	s	CAPACITOR,CERAMIC 4700PF/50V B
C315	1-107-417-11	s	CAPACITOR ERECT 33MF/25V(105C)
C316	1-164-156-11	s	CAPACITOR,CERAMIC 0.1MF/25V F
C318	1-165-176-11	s	CAPACITOR,CERAMIC 47000PF/16V
C319	1-126-402-11	s	CAPACITOR, ELECT 2.2MF/50V
C320	1-164-156-11	s	CAPACITOR,CERAMIC 0.1MF/25V F
C323	1-165-176-11	s	CAPACITOR,CERAMIC 47000PF/16V
C324	1-126-402-11	s	CAPACITOR, ELECT 2.2MF/50V
C325	1-164-156-11	s	CAPACITOR,CERAMIC 0.1MF/25V F
C326	1-165-176-11	s	CAPACITOR,CERAMIC 47000PF/16V
C327	1-126-402-11	s	CAPACITOR, ELECT 2.2MF/50V
C328	1-164-156-11	s	CAPACITOR,CERAMIC 0.1MF/25V F
C329	1-162-967-11	s	CAPACITOR,CERAMIC 3300PF/50V B
C330	1-162-967-11	s	CAPACITOR,CERAMIC 3300PF/50V B

(DR-428 BOARD)

Ref. No. or Q'ty	Part No.	SP	Description
C331	1-162-970-11	s	CAPACITOR CERAMIC 0.01MF/25V B
C332	1-115-340-11	s	CAPACITOR CERAMIC 0.22MF/25V B
C333	1-164-156-11	s	CAPACITOR,CERAMIC 0.1MF/25V F
C334	1-164-156-11	s	CAPACITOR,CERAMIC 0.1MF/25V F
C335	1-164-156-11	s	CAPACITOR,CERAMIC 0.1MF/25V F
C336	1-162-970-11	s	CAPACITOR CERAMIC 0.01MF/25V B
C337	1-164-677-11	s	CAPACITOR,CERAMIC 0.033MF/16V
C338	1-164-677-11	s	CAPACITOR,CERAMIC 0.033MF/16V
C339	1-164-677-11	s	CAPACITOR,CERAMIC 0.033MF/16V
C340	1-162-968-11	s	CAPACITOR,CERAMIC 4700PF/50V B
C341	1-162-968-11	s	CAPACITOR,CERAMIC 4700PF/50V B
C342	1-162-968-11	s	CAPACITOR,CERAMIC 4700PF/50V B
C343	1-165-176-11	s	CAPACITOR,CERAMIC 47000PF/16V
C344	1-164-315-11	s	CAPACITOR,CERAMIC 470PF/50V CH
C345	1-162-969-11	s	CAPACITOR,CERAMIC 6800PF/25V B
C346	1-135-600-11	s	CAPACITOR,ELECT 22M 20V
C347	1-162-964-11	s	CAPACITOR,CERAMIC 1000PF/50V B
C348	1-162-968-11	s	CAPACITOR,CERAMIC 4700PF/50V B
C349	1-107-417-11	s	CAPACITOR ERECT 33MF/25V(105C)
C350	1-164-156-11	s	CAPACITOR,CERAMIC 0.1MF/25V F
C352	1-165-176-11	s	CAPACITOR,CERAMIC 47000PF/16V
C353	1-126-402-11	s	CAPACITOR, ELECT 2.2MF/50V
C354	1-164-156-11	s	CAPACITOR,CERAMIC 0.1MF/25V F
C357	1-165-176-11	s	CAPACITOR,CERAMIC 47000PF/16V
C358	1-126-402-11	s	CAPACITOR, ELECT 2.2MF/50V
C359	1-164-156-11	s	CAPACITOR,CERAMIC 0.1MF/25V F
C360	1-165-176-11	s	CAPACITOR,CERAMIC 47000PF/16V
C361	1-126-402-11	s	CAPACITOR, ELECT 2.2MF/50V
C362	1-164-156-11	s	CAPACITOR,CERAMIC 0.1MF/25V F
C363	1-162-967-11	s	CAPACITOR,CERAMIC 3300PF/50V B
C364	1-162-967-11	s	CAPACITOR,CERAMIC 3300PF/50V B
C365	1-162-970-11	s	CAPACITOR CERAMIC 0.01MF/25V B
C366	1-115-340-11	s	CAPACITOR CERAMIC 0.22MF/25V B
C367	1-164-156-11	s	CAPACITOR,CERAMIC 0.1MF/25V F
C368	1-164-156-11	s	CAPACITOR,CERAMIC 0.1MF/25V F
C369	1-164-156-11	s	CAPACITOR,CERAMIC 0.1MF/25V F
C370	1-162-970-11	s	CAPACITOR CERAMIC 0.01MF/25V B
C371	1-164-677-11	s	CAPACITOR,CERAMIC 0.033MF/16V
C372	1-164-677-11	s	CAPACITOR,CERAMIC 0.033MF/16V
C373	1-164-677-11	s	CAPACITOR,CERAMIC 0.033MF/16V
C374	1-162-968-11	s	CAPACITOR,CERAMIC 4700PF/50V B
C375	1-162-968-11	s	CAPACITOR,CERAMIC 4700PF/50V B
C376	1-162-968-11	s	CAPACITOR,CERAMIC 4700PF/50V B
C377	1-164-156-11	s	CAPACITOR,CERAMIC 0.1MF/25V F
C378	1-164-156-11	s	CAPACITOR,CERAMIC 0.1MF/25V F
C379	1-164-156-11	s	CAPACITOR,CERAMIC 0.1MF/25V F
C380	1-164-156-11	s	CAPACITOR,CERAMIC 0.1MF/25V F
C381	1-164-156-11	s	CAPACITOR,CERAMIC 0.1MF/25V F
C382	1-164-156-11	s	CAPACITOR,CERAMIC 0.1MF/25V F
C383	1-164-156-11	s	CAPACITOR,CERAMIC 0.1MF/25V F
C384	1-164-156-11	s	CAPACITOR,CERAMIC 0.1MF/25V F
C385	1-164-156-11	s	CAPACITOR,CERAMIC 0.1MF/25V F
C386	1-164-156-11	s	CAPACITOR,CERAMIC 0.1MF/25V F
C387	1-164-156-11	s	CAPACITOR,CERAMIC 0.1MF/25V F
C401	1-164-315-11	s	CAPACITOR,CERAMIC 470PF/50V CH
C402	1-162-969-11	s	CAPACITOR,CERAMIC 6800PF/25V B
C403	1-162-964-11	s	CAPACITOR,CERAMIC 1000PF/50V B
C404	1-162-968-11	s	CAPACITOR,CERAMIC 4700PF/50V B
C405	1-107-417-11	s	CAPACITOR ERECT 33MF/25V(105C)

(DR-428 BOARD)

Ref. No. or Q'ty	Part No.	SP	Description
C406	1-162-923-11	s	CAPACITOR,CERAMIC 47PF/50V CH
C407	1-162-923-11	s	CAPACITOR,CERAMIC 47PF/50V CH
C408	1-162-969-11	s	CAPACITOR,CERAMIC 6800PF/25V B
C409	1-162-969-11	s	CAPACITOR,CERAMIC 6800PF/25V B
C410	1-164-156-11	s	CAPACITOR,CERAMIC 0.1MF/25V F
C411	1-164-156-11	s	CAPACITOR,CERAMIC 0.1MF/25V F
C412	1-162-967-11	s	CAPACITOR,CERAMIC 3300PF/50V B
C413	1-162-967-11	s	CAPACITOR,CERAMIC 3300PF/50V B
C414	1-164-156-11	s	CAPACITOR,CERAMIC 0.1MF/25V F
C415	1-164-156-11	s	CAPACITOR,CERAMIC 0.1MF/25V F
C416	1-164-156-11	s	CAPACITOR,CERAMIC 0.1MF/25V F
C417	1-107-885-11	s	CAPACITOR ELECT 3300MF/16V
C418	1-128-339-11	s	CAPACITOR,ELECT 2200MF/16V
C419	1-107-914-11	s	CAPACITOR,ELECT 1000MF/50V
C421	1-126-390-11	s	CAPACITOR ELECT 22MF/6.3V(105)
C422	1-126-394-11	s	CAPACITOR,ELECT 10MF/16V(CHIP)
C423	1-126-394-11	s	CAPACITOR,ELECT 10MF/16V(CHIP)
C424	1-126-394-11	s	CAPACITOR,ELECT 10MF/16V(CHIP)
C425	1-164-156-11	s	CAPACITOR,CERAMIC 0.1MF/25V F
C426	1-164-156-11	s	CAPACITOR,CERAMIC 0.1MF/25V F
C427	1-164-156-11	s	CAPACITOR,CERAMIC 0.1MF/25V F
C428	1-135-600-11	s	CAPACITOR,ELECT 22M 20V
C429	1-164-156-11	s	CAPACITOR,CERAMIC 0.1MF/25V F
C430	1-164-156-11	s	CAPACITOR,CERAMIC 0.1MF/25V F
C431	1-164-156-11	s	CAPACITOR,CERAMIC 0.1MF/25V F
CN1	1-770-300-21	o	HOUSING, CONNECTOR 18P
CN3	1-778-647-11	o	CONNECTOR, FFC (ZIF) 15P
CN4	1-778-647-11	o	CONNECTOR, FFC (ZIF) 15P
CN10	1-695-480-21	o	PIN, CONNECTOR (PC BOARD) 2P
CN11	1-764-078-11	s	PIN, CONNECTOR (PC BOARD) 3P
CN12	1-750-840-21	s	HOUSING, CONNECTOR 15P
CN13	1-764-078-11	s	PIN, CONNECTOR (PC BOARD) 3P
CN14	1-778-648-11	o	CONNECTOR, FFC (ZIF) 20P
CN15	1-764-078-11	s	PIN, CONNECTOR (PC BOARD) 3P
CN16	1-766-432-21	o	HOUSING, CONNECTOR 6P
CN17	1-778-648-11	o	CONNECTOR, FFC (ZIF) 20P
CN18	1-778-648-11	o	CONNECTOR, FFC (ZIF) 20P
CN19	1-695-320-21	o	PIN, CONNECTOR(1.5MM)SMD 2P
CN20	1-764-078-11	s	PIN, CONNECTOR (PC BOARD) 3P
CN21	1-695-480-21	o	PIN, CONNECTOR (PC BOARD) 2P
CN301	1-695-889-21	s	PIN, CONNECTOR (PC BOARD) 10P
CN302	1-778-534-11	o	CONNECTOR, FFC (ZIF) 45P
CN303	1-778-534-11	o	CONNECTOR, FFC (ZIF) 45P
D1	8-719-024-77	s	DIODE HN1D03FU-TE85L
D3	8-719-158-15	s	DIODE RD5.6SB
D4	*2 8-719-029-63	s	DIODE RD4.3UH-T1
D5	*2 8-719-029-63	s	DIODE RD4.3UH-T1
D6	*2 8-719-029-63	s	DIODE RD4.3UH-T1
D7	*2 8-719-029-63	s	DIODE RD4.3UH-T1
D8	*2 8-719-029-63	s	DIODE RD4.3UH-T1
D9	*2 8-719-029-63	s	DIODE RD4.3UH-T1
D10	*2 8-719-029-63	s	DIODE RD4.3UH-T1
D11	*2 8-719-029-63	s	DIODE RD4.3UH-T1
D12	*2 8-719-029-63	s	DIODE RD4.3UH-T1
D13	*2 8-719-029-63	s	DIODE RD4.3UH-T1
D14	*2 8-719-029-63	s	DIODE RD4.3UH-T1
D15	*2 8-719-029-63	s	DIODE RD4.3UH-T1
D101	8-719-024-77	s	DIODE HN1D03FU-TE85L

(DR-428 BOARD)

Ref. No. or Q'ty	Part No.	SP	Description
D102	8-719-024-77	s	DIODE HN1D03FU-TE85L
D109	8-719-024-77	s	DIODE HN1D03FU-TE85L
D117	8-719-024-77	s	DIODE HN1D03FU-TE85L
D125	8-719-024-77	s	DIODE HN1D03FU-TE85L
D201	8-719-980-38	s	DIODE SB07-03C (RECTI)
D204	8-719-941-86	s	DIODE DAN202U
D301	8-719-980-38	s	DIODE SB07-03C (RECTI)
D302	8-719-981-59	s	DIODE FC805
D303	8-719-105-28	s	DIODE RD2.4M-B
D304	8-719-981-59	s	DIODE FC805
D305	8-719-105-28	s	DIODE RD2.4M-B
D306	8-719-981-59	s	DIODE FC805
D308	8-719-980-38	s	DIODE SB07-03C (RECTI)
D309	8-719-981-59	s	DIODE FC805
D311	8-719-981-59	s	DIODE FC805
D313	8-719-981-59	s	DIODE FC805
D401	8-719-980-38	s	DIODE SB07-03C (RECTI)
D403	8-719-053-18	s	DIODE 1SR154-400TE-25
D404	8-719-081-09	s	DIODE S1ZAS4F72
D406	8-719-024-77	s	DIODE HN1D03FU-TE85L
D408	8-719-053-18	s	DIODE 1SR154-400TE-25
D410	8-719-081-09	s	DIODE S1ZAS4F72
D412	8-719-081-09	s	DIODE S1ZAS4F72
D414	8-719-024-77	s	DIODE HN1D03FU-TE85L
D415	8-719-053-18	s	DIODE 1SR154-400TE-25
D417	8-719-977-22	s	DIODE DTZ9.1
D418	8-719-081-09	s	DIODE S1ZAS4F72
F1	⚠ 1-576-401-21	s	FUSE (SMD)
IC1	*1 8-752-919-35	s	IC CXP912032-208R
IC2	8-759-523-84	s	IC TC74VHC14FT (EL)
IC3	8-759-523-84	s	IC TC74VHC14FT (EL)
IC4	8-759-523-84	s	IC TC74VHC14FT (EL)
IC5	8-759-338-95	s	IC NJM2903V (TE2)
IC6	8-759-198-61	s	IC S-80727SL-AQ-T1
IC7	8-759-196-96	s	IC TC7SH08FU (TE85R)
IC8	8-759-593-47	s	IC AK6417AM-E2
IC101	8-759-683-25	s	IC 74VHC4052MTCX
IC102	8-759-683-25	s	IC 74VHC4052MTCX
IC103	8-759-683-25	s	IC 74VHC4052MTCX
IC104	8-759-683-25	s	IC 74VHC4052MTCX
IC105	8-759-485-79	s	IC TC7SET08FU (TE85L)
IC106	8-759-485-79	s	IC TC7SET08FU (TE85L)
IC201	8-759-444-87	s	IC NJM324V (TE2)
IC202	8-759-338-95	s	IC NJM2903V (TE2)
IC203	8-759-278-58	s	IC NJM4558V (TE2)
IC204	8-759-444-87	s	IC NJM324V (TE2)
IC206	8-759-399-64	s	IC LB1857M-TE-L
IC207	8-759-399-64	s	IC LB1857M-TE-L
IC208	8-759-273-87	s	IC NJM2901V (TE2)
IC209	8-759-444-87	s	IC NJM324V (TE2)
IC301	8-759-278-58	s	IC NJM4558V (TE2)
IC302	8-759-278-58	s	IC NJM4558V (TE2)
IC303	8-759-278-58	s	IC NJM4558V (TE2)
IC304	8-759-559-74	s	IC AN3834S
IC305	8-759-559-74	s	IC AN3834S
IC306	8-759-337-40	s	IC NJM2904V(TE2)
IC307	8-759-338-95	s	IC NJM2903V (TE2)
IC401	8-759-271-84	s	IC TC7SH02FU

(DR-428 BOARD)

Ref. No. or Q'ty	Part No.	SP	Description
IC402	8-759-337-40	s	IC NJM2904V(TE2)
IC403	8-759-689-24	s	IC BA6247FP-YE2
IC404	8-759-276-89	s	IC BA6285FP (E2)
IC405	8-759-491-50	s	IC TC74VHCT244AFT(EL)
IC406	8-759-278-58	s	IC NJM4558V (TE2)
L201	1-414-696-21	s	INDUCTOR (POWER) 330UH
L202	1-414-696-21	s	INDUCTOR (POWER) 330UH
L301	1-406-825-11	s	COIL, CHOKE 33UH
L302	1-406-825-11	s	COIL, CHOKE 33UH
L400	1-406-825-11	s	COIL, CHOKE 33UH
L401	1-412-030-11	s	INDUCTOR,CHIP 22UH (3225)
L402	1-412-030-11	s	INDUCTOR,CHIP 22UH (3225)
L403	1-412-030-11	s	INDUCTOR,CHIP 22UH (3225)
L404	1-412-030-11	s	INDUCTOR,CHIP 22UH (3225)
PS1	⚠ 1-576-123-21	s	CIRCUIT PROTECTOR 0.8A(IC LINK
PS2	⚠ 1-576-123-21	s	CIRCUIT PROTECTOR 0.8A(IC LINK
PS3	⚠ 1-576-123-21	s	CIRCUIT PROTECTOR 0.8A(IC LINK
PS4	⚠ 1-576-123-21	s	CIRCUIT PROTECTOR 0.8A(IC LINK
Q105	8-729-928-90	s	TRANSISTOR DTC114EE
Q201	8-729-930-32	s	TRANSISTOR UMH11
Q202	8-729-930-44	s	TRANSISTOR UMY1-TR
Q203	8-729-030-78	s	TRANSISTOR FP102T-TL
Q205	8-729-140-63	s	TRANSISTOR 2SA1611-M5M6
Q206	8-729-140-63	s	TRANSISTOR 2SA1611-M5M6
Q207	8-729-807-51	s	TRANSISTOR 2SD1623-S
Q209	8-729-807-51	s	TRANSISTOR 2SD1623-S
Q211	8-729-049-16	s	TRANSISTOR SI2307DS-T1
Q301	8-729-930-32	s	TRANSISTOR UMH11
Q302	8-729-930-32	s	TRANSISTOR UMH11
Q303	8-729-930-44	s	TRANSISTOR UMY1-TR
Q304	8-729-930-44	s	TRANSISTOR UMY1-TR
Q305	8-729-049-16	s	TRANSISTOR SI2307DS-T1
Q306	8-729-049-16	s	TRANSISTOR SI2307DS-T1
Q401	8-729-930-32	s	TRANSISTOR UMH11
Q403	8-729-930-44	s	TRANSISTOR UMY1-TR
Q404	8-729-049-16	s	TRANSISTOR SI2307DS-T1
Q405	8-729-427-46	s	TRANSISTOR XP4213
Q406	8-729-930-44	s	TRANSISTOR UMY1-TR
Q407	8-729-047-61	s	TRANSISTOR SI4925DY-T1
Q408	8-729-928-27	s	TRANSISTOR DTA144EE
Q409	8-729-928-81	s	TRANSISTOR DTC144EE
Q410	8-729-927-59	s	TRANSISTOR UMZ1
Q411	8-729-927-59	s	TRANSISTOR UMZ1
Q412	8-729-024-50	s	TRANSISTOR SI9936DY
Q413	8-729-024-50	s	TRANSISTOR SI9936DY
Q414	8-729-024-50	s	TRANSISTOR SI9936DY
Q415	8-729-024-50	s	TRANSISTOR SI9936DY
R1	1-216-817-11	s	RESISTOR,CHIP 470 1/16W 1608
R2	1-216-817-11	s	RESISTOR,CHIP 470 1/16W 1608
R3	1-216-817-11	s	RESISTOR,CHIP 470 1/16W 1608
R4	1-216-817-11	s	RESISTOR,CHIP 470 1/16W 1608
R5	1-216-809-11	s	RESISTOR,CHIP 100 1/16W 1608
R6	1-218-863-11	s	RESISTOR,CHIP 4.7K 1/16W(1608)
R7	1-218-843-11	s	RESISTOR,CHIP 680 1/16W (1608)
R8	1-218-863-11	s	RESISTOR,CHIP 4.7K 1/16W(1608)
R9	1-218-859-11	s	RESISTOR,CHIP 3.3K 1/16W(1608)
R10	1-218-859-11	s	RESISTOR,CHIP 3.3K 1/16W(1608)
R11	1-216-845-11	s	RESISTOR,CHIP 100K 1/16W(1608)

(DR-428 BOARD)

Ref. No. or Q'ty	Part No.	SP	Description
R12	1-216-845-11	s	RESISTOR,CHIP 100K 1/16W(1608)
R13	1-216-833-11	s	RESISTOR,CHIP 10K 1/16W (1608)
R14	1-216-833-11	s	RESISTOR,CHIP 10K 1/16W (1608)
R15	1-216-837-11	s	RESISTOR,CHIP 22K 1/16W 1608
R16	1-216-841-11	s	RESISTOR, CHIP 47K 1/16W 1608
R17	1-216-809-11	s	RESISTOR,CHIP 100 1/16W 1608
R18	1-216-809-11	s	RESISTOR,CHIP 100 1/16W 1608
R19	1-216-809-11	s	RESISTOR,CHIP 100 1/16W 1608
R20	1-216-809-11	s	RESISTOR,CHIP 100 1/16W 1608
R21	1-216-837-11	s	RESISTOR,CHIP 22K 1/16W 1608
R22	1-216-837-11	s	RESISTOR,CHIP 22K 1/16W 1608
R23	1-216-837-11	s	RESISTOR,CHIP 22K 1/16W 1608
R24	1-216-809-11	s	RESISTOR,CHIP 100 1/16W 1608
R25	1-216-809-11	s	RESISTOR,CHIP 100 1/16W 1608
R26	1-216-857-11	s	RESISTOR,CHIP 1M 1/16W(1608)
R27	1-216-837-11	s	RESISTOR,CHIP 22K 1/16W 1608
R28	1-216-817-11	s	RESISTOR,CHIP 470 1/16W 1608
R30	1-216-840-11	s	RESISTOR,CHIP 39K 1/16W 1608
R31	1-216-841-11	s	RESISTOR, CHIP 47K 1/16W 1608
R32	1-216-841-11	s	RESISTOR, CHIP 47K 1/16W 1608
R33	1-216-838-11	s	RESISTOR CHIP 27K 1/16W(1608)
R34	1-216-837-11	s	RESISTOR,CHIP 22K 1/16W 1608
R35 *2	1-216-821-11	s	RESISTOR,CHIP 1.0K 1/16W(1608)
R102	1-216-837-11	s	RESISTOR,CHIP 22K 1/16W 1608
R103	1-218-859-11	s	RESISTOR,CHIP 3.3K 1/16W(1608)
R104	1-218-847-11	s	RESISTOR, CHIP 1K 1/16W (1608)
R105	1-218-882-11	s	RESISTOR, CHIP 30K 1/16W(1608)
R106	1-216-833-11	s	RESISTOR,CHIP 10K 1/16W (1608)
R107	1-216-817-11	s	RESISTOR,CHIP 470 1/16W 1608
R108	1-216-811-11	s	RESISTOR, CHIP 150 1/16W(1608)
R109	1-216-841-11	s	RESISTOR, CHIP 47K 1/16W 1608
R110	1-216-817-11	s	RESISTOR,CHIP 470 1/16W 1608
R111	1-216-812-11	s	RESISTOR,CHIP 180 1/16W 1608
R112	1-216-817-11	s	RESISTOR,CHIP 470 1/16W 1608
R113	1-216-837-11	s	RESISTOR,CHIP 22K 1/16W 1608
R115	1-216-817-11	s	RESISTOR,CHIP 470 1/16W 1608
R116	1-216-841-11	s	RESISTOR, CHIP 47K 1/16W 1608
R117	1-216-841-11	s	RESISTOR, CHIP 47K 1/16W 1608
R118	1-216-841-11	s	RESISTOR, CHIP 47K 1/16W 1608
R119	1-216-841-11	s	RESISTOR, CHIP 47K 1/16W 1608
R120	1-216-841-11	s	RESISTOR, CHIP 47K 1/16W 1608
R121	1-216-841-11	s	RESISTOR, CHIP 47K 1/16W 1608
R122	1-216-841-11	s	RESISTOR, CHIP 47K 1/16W 1608
R123	1-216-841-11	s	RESISTOR, CHIP 47K 1/16W 1608
R124	1-216-841-11	s	RESISTOR, CHIP 47K 1/16W 1608
R125	1-216-841-11	s	RESISTOR, CHIP 47K 1/16W 1608
R201	1-216-850-11	s	RESISTOR,CHIP 270K 1/16W 1608
R202	1-216-845-11	s	RESISTOR,CHIP 100K 1/16W(1608)
R203	1-216-829-11	s	RESISTOR,CHIP 4.7K 1/16W(1608)
R204	1-216-829-11	s	RESISTOR,CHIP 4.7K 1/16W(1608)
R205	1-216-821-11	s	RESISTOR,CHIP 1.0K 1/16W(1608)
R206	1-216-845-11	s	RESISTOR,CHIP 100K 1/16W(1608)
R207	1-216-845-11	s	RESISTOR,CHIP 100K 1/16W(1608)
R208	1-216-821-11	s	RESISTOR,CHIP 1.0K 1/16W(1608)
R209	1-218-859-11	s	RESISTOR,CHIP 3.3K 1/16W(1608)
R210	1-216-845-11	s	RESISTOR,CHIP 100K 1/16W(1608)
R211	1-216-850-11	s	RESISTOR,CHIP 270K 1/16W 1608
R212	1-216-845-11	s	RESISTOR,CHIP 100K 1/16W(1608)
R213	1-216-829-11	s	RESISTOR,CHIP 4.7K 1/16W(1608)

(DR-428 BOARD)

Ref. No. or Q'ty	Part No.	SP	Description
R214	1-216-833-11	s	RESISTOR,CHIP 10K 1/16W (1608)
R215	1-216-833-11	s	RESISTOR,CHIP 10K 1/16W (1608)
R216	1-216-833-11	s	RESISTOR,CHIP 10K 1/16W (1608)
R217	1-216-853-11	s	RESISTOR,CHIP 470K 1/16W(1608)
R218	1-218-889-11	s	RESISTOR,CHIP 56K 1/16W(1608)
R219	1-216-853-11	s	RESISTOR,CHIP 470K 1/16W(1608)
R220	1-218-855-11	s	RESISTOR,CHIP 2.2K 1/16W(1608)
R221	1-216-833-11	s	RESISTOR,CHIP 10K 1/16W (1608)
R222	1-218-847-11	s	RESISTOR, CHIP 1K 1/16W (1608)
R223	1-218-863-11	s	RESISTOR,CHIP 4.7K 1/16W(1608)
R224	1-218-863-11	s	RESISTOR,CHIP 4.7K 1/16W(1608)
R225	1-218-847-11	s	RESISTOR, CHIP 1K 1/16W (1608)
R228	1-218-883-11	s	RESISTOR,CHIP 33K 1/16W (1608)
R229	1-218-883-11	s	RESISTOR,CHIP 33K 1/16W (1608)
R230	1-216-845-11	s	RESISTOR,CHIP 100K 1/16W(1608)
R231	1-216-833-11	s	RESISTOR,CHIP 10K 1/16W (1608)
R232	1-216-840-11	s	RESISTOR,CHIP 39K 1/16W 1608
R233	1-216-837-11	s	RESISTOR,CHIP 22K 1/16W 1608
R234	1-216-831-11	s	RESISTOR,CHIP 6.8K 1/16W(1608)
R235	1-216-843-11	s	RESISTOR,CHIP 68K 1/16W (1608)
R236	1-216-829-11	s	RESISTOR,CHIP 4.7K 1/16W(1608)
R237	1-216-833-11	s	RESISTOR,CHIP 10K 1/16W (1608)
R238	1-216-833-11	s	RESISTOR,CHIP 10K 1/16W (1608)
R239	1-216-809-11	s	RESISTOR,CHIP 100 1/16W 1608
R240	1-216-821-11	s	RESISTOR,CHIP 1.0K 1/16W(1608)
R241	1-218-855-11	s	RESISTOR,CHIP 2.2K 1/16W(1608)
R242	1-216-830-11	s	RESISTOR,CHIP 5.6K 1/16W 1608
R243	1-216-845-11	s	RESISTOR,CHIP 100K 1/16W(1608)
R244	1-216-837-11	s	RESISTOR,CHIP 22K 1/16W 1608
R245	1-216-833-11	s	RESISTOR,CHIP 10K 1/16W (1608)
R246	1-216-849-11	s	RESISTOR,CHIP 220K 1/16W 1608
R247	1-216-841-11	s	RESISTOR, CHIP 47K 1/16W 1608
R248	1-216-845-11	s	RESISTOR,CHIP 100K 1/16W(1608)
R249	1-216-849-11	s	RESISTOR,CHIP 220K 1/16W 1608
R250	1-218-883-11	s	RESISTOR,CHIP 33K 1/16W (1608)
R251	1-216-849-11	s	RESISTOR,CHIP 220K 1/16W 1608
R252	1-218-883-11	s	RESISTOR,CHIP 33K 1/16W (1608)
R253	1-211-737-11	s	RESISTOR 0.47 1/4W (3225)
R254	1-211-737-11	s	RESISTOR 0.47 1/4W (3225)
R255	1-218-889-11	s	RESISTOR,CHIP 56K 1/16W(1608)
R256	1-216-811-11	s	RESISTOR, CHIP 150 1/16W(1608)
R257	1-216-809-11	s	RESISTOR,CHIP 100 1/16W 1608
R258	1-216-853-11	s	RESISTOR,CHIP 470K 1/16W(1608)
R259	1-216-853-11	s	RESISTOR,CHIP 470K 1/16W(1608)
R260	1-216-854-11	s	RESISTOR, CHIP 560K 1/16W 1608
R261	1-216-829-11	s	RESISTOR,CHIP 4.7K 1/16W(1608)
R262	1-216-841-11	s	RESISTOR, CHIP 47K 1/16W 1608
R263	1-216-840-11	s	RESISTOR,CHIP 39K 1/16W 1608
R264	1-216-837-11	s	RESISTOR,CHIP 22K 1/16W 1608
R265	1-216-831-11	s	RESISTOR,CHIP 6.8K 1/16W(1608)
R266	1-216-843-11	s	RESISTOR,CHIP 68K 1/16W (1608)
R267	1-216-829-11	s	RESISTOR,CHIP 4.7K 1/16W(1608)
R268	1-216-829-11	s	RESISTOR,CHIP 4.7K 1/16W(1608)
R269	1-218-855-11	s	RESISTOR,CHIP 2.2K 1/16W(1608)
R270	1-216-821-11	s	RESISTOR,CHIP 1.0K 1/16W(1608)
R271	1-218-855-11	s	RESISTOR,CHIP 2.2K 1/16W(1608)
R272	1-216-830-11	s	RESISTOR,CHIP 5.6K 1/16W 1608
R273	1-216-845-11	s	RESISTOR,CHIP 100K 1/16W(1608)
R274	1-216-837-11	s	RESISTOR,CHIP 22K 1/16W 1608

(DR-428 BOARD)

Ref. No. or Q'ty	Part No.	SP	Description
R275	1-216-833-11	s	RESISTOR,CHIP 10K 1/16W (1608)
R276	1-216-849-11	s	RESISTOR,CHIP 220K 1/16W 1608
R277	1-216-841-11	s	RESISTOR, CHIP 47K 1/16W 1608
R278	1-216-845-11	s	RESISTOR,CHIP 100K 1/16W(1608)
R279	1-216-845-11	s	RESISTOR,CHIP 100K 1/16W(1608)
R280	1-216-833-11	s	RESISTOR,CHIP 10K 1/16W (1608)
R281	1-216-845-11	s	RESISTOR,CHIP 100K 1/16W(1608)
R282	1-216-833-11	s	RESISTOR,CHIP 10K 1/16W (1608)
R283	1-211-737-11	s	RESISTOR 0.47 1/4W (3225)
R284	1-211-737-11	s	RESISTOR 0.47 1/4W (3225)
R285	1-218-889-11	s	RESISTOR,CHIP 56K 1/16W(1608)
R286	1-216-812-11	s	RESISTOR,CHIP 180 1/16W 1608
R287	1-216-296-91	s	CONDUCTOR, CHIP (3216)
R301	1-218-847-11	s	RESISTOR, CHIP 1K 1/16W (1608)
R302	1-218-847-11	s	RESISTOR, CHIP 1K 1/16W (1608)
R303	1-218-863-11	s	RESISTOR,CHIP 4.7K 1/16W(1608)
R304	1-218-863-11	s	RESISTOR,CHIP 4.7K 1/16W(1608)
R305	1-218-903-11	s	RESISTOR,CHIP 220K 1/16W(1608)
R306	1-218-847-11	s	RESISTOR, CHIP 1K 1/16W (1608)
R307	1-218-863-11	s	RESISTOR,CHIP 4.7K 1/16W(1608)
R308	1-218-863-11	s	RESISTOR,CHIP 4.7K 1/16W(1608)
R309	1-218-889-11	s	RESISTOR,CHIP 56K 1/16W(1608)
R310	1-218-847-11	s	RESISTOR, CHIP 1K 1/16W (1608)
R311	1-216-817-11	s	RESISTOR,CHIP 470 1/16W 1608
R312	1-216-817-11	s	RESISTOR,CHIP 470 1/16W 1608
R313	1-218-889-11	s	RESISTOR,CHIP 56K 1/16W(1608)
R314	1-218-847-11	s	RESISTOR, CHIP 1K 1/16W (1608)
R315	1-218-863-11	s	RESISTOR,CHIP 4.7K 1/16W(1608)
R316	1-218-863-11	s	RESISTOR,CHIP 4.7K 1/16W(1608)
R317	1-218-889-11	s	RESISTOR,CHIP 56K 1/16W(1608)
R318	1-218-847-11	s	RESISTOR, CHIP 1K 1/16W (1608)
R321	1-218-889-11	s	RESISTOR,CHIP 56K 1/16W(1608)
R322	1-216-838-11	s	RESISTOR CHIP 27K 1/16W(1608)
R323	1-216-840-11	s	RESISTOR,CHIP 39K 1/16W 1608
R324	1-216-837-11	s	RESISTOR,CHIP 22K 1/16W 1608
R325	1-216-838-11	s	RESISTOR CHIP 27K 1/16W(1608)
R326	1-216-843-11	s	RESISTOR,CHIP 68K 1/16W (1608)
R327	1-216-829-11	s	RESISTOR,CHIP 4.7K 1/16W(1608)
R328	1-216-833-11	s	RESISTOR,CHIP 10K 1/16W (1608)
R329	1-216-833-11	s	RESISTOR,CHIP 10K 1/16W (1608)
R330	1-216-809-11	s	RESISTOR,CHIP 100 1/16W 1608
R331	1-216-821-11	s	RESISTOR,CHIP 1.0K 1/16W(1608)
R332	1-220-244-11	s	RESISTOR CHIP 33 1/4W (3225)
R333	1-220-244-11	s	RESISTOR CHIP 33 1/4W (3225)
R334	1-220-244-11	s	RESISTOR CHIP 33 1/4W (3225)
R335	1-216-849-11	s	RESISTOR,CHIP 220K 1/16W 1608
R336	1-216-841-11	s	RESISTOR, CHIP 47K 1/16W 1608
R337	1-218-855-11	s	RESISTOR,CHIP 2.2K 1/16W(1608)
R338	1-216-849-11	s	RESISTOR,CHIP 220K 1/16W 1608
R339	1-216-849-11	s	RESISTOR,CHIP 220K 1/16W 1608
R340	1-216-845-11	s	RESISTOR,CHIP 100K 1/16W(1608)
R341	1-216-849-11	s	RESISTOR,CHIP 220K 1/16W 1608
R342	1-218-847-11	s	RESISTOR, CHIP 1K 1/16W (1608)
R343	1-216-845-11	s	RESISTOR,CHIP 100K 1/16W(1608)
R344	1-220-149-11	s	RESISTOR,CHIP 2.2 1/2W (4532)
R345	1-220-149-11	s	RESISTOR,CHIP 2.2 1/2W (4532)
R346	1-216-834-11	s	RESISTOR,CHIP 12K 1/16W 1608
R347	1-216-841-11	s	RESISTOR, CHIP 47K 1/16W 1608
R348	1-216-817-11	s	RESISTOR,CHIP 470 1/16W 1608

(DR-428 BOARD)

Ref. No. or Q'ty	Part No.	SP	Description
R349	1-216-817-11	s	RESISTOR,CHIP 470 1/16W 1608
R350	1-216-838-11	s	RESISTOR CHIP 27K 1/16W(1608)
R351	1-216-840-11	s	RESISTOR,CHIP 39K 1/16W 1608
R352	1-216-837-11	s	RESISTOR,CHIP 22K 1/16W 1608
R353	1-216-838-11	s	RESISTOR CHIP 27K 1/16W(1608)
R354	1-216-843-11	s	RESISTOR,CHIP 68K 1/16W (1608)
R355	1-216-829-11	s	RESISTOR,CHIP 4.7K 1/16W(1608)
R356	1-216-833-11	s	RESISTOR,CHIP 10K 1/16W (1608)
R357	1-216-833-11	s	RESISTOR,CHIP 10K 1/16W (1608)
R358	1-216-809-11	s	RESISTOR,CHIP 100 1/16W 1608
R359	1-216-821-11	s	RESISTOR,CHIP 1.0K 1/16W(1608)
R360	1-220-244-11	s	RESISTOR CHIP 33 1/4W (3225)
R361	1-220-244-11	s	RESISTOR CHIP 33 1/4W (3225)
R362	1-220-244-11	s	RESISTOR CHIP 33 1/4W (3225)
R363	1-216-849-11	s	RESISTOR,CHIP 220K 1/16W 1608
R364	1-216-841-11	s	RESISTOR, CHIP 47K 1/16W 1608
R365	1-218-855-11	s	RESISTOR,CHIP 2.2K 1/16W(1608)
R366	1-216-849-11	s	RESISTOR,CHIP 220K 1/16W 1608
R367	1-216-849-11	s	RESISTOR,CHIP 220K 1/16W 1608
R368	1-216-845-11	s	RESISTOR,CHIP 100K 1/16W(1608)
R369	1-216-849-11	s	RESISTOR,CHIP 220K 1/16W 1608
R370	1-216-845-11	s	RESISTOR,CHIP 100K 1/16W(1608)
R371	1-218-847-11	s	RESISTOR, CHIP 1K 1/16W (1608)
R372	1-220-149-11	s	RESISTOR,CHIP 2.2 1/2W (4532)
R373	1-220-149-11	s	RESISTOR,CHIP 2.2 1/2W (4532)
R374	1-216-834-11	s	RESISTOR,CHIP 12K 1/16W 1608
R375	1-216-841-11	s	RESISTOR, CHIP 47K 1/16W 1608
R376	1-216-817-11	s	RESISTOR,CHIP 470 1/16W 1608
R377	1-216-817-11	s	RESISTOR,CHIP 470 1/16W 1608
R378	1-218-903-11	s	RESISTOR,CHIP 220K 1/16W(1608)
R401	1-216-833-11	s	RESISTOR,CHIP 10K 1/16W (1608)
R402	1-216-837-11	s	RESISTOR,CHIP 22K 1/16W 1608
R403	1-216-837-11	s	RESISTOR,CHIP 22K 1/16W 1608
R404	1-216-840-11	s	RESISTOR,CHIP 39K 1/16W 1608
R405	1-216-843-11	s	RESISTOR,CHIP 68K 1/16W (1608)
R406	1-216-838-11	s	RESISTOR CHIP 27K 1/16W(1608)
R407	1-216-829-11	s	RESISTOR,CHIP 4.7K 1/16W(1608)
R408	1-216-833-11	s	RESISTOR,CHIP 10K 1/16W (1608)
R409	1-216-833-11	s	RESISTOR,CHIP 10K 1/16W (1608)
R410	1-216-809-11	s	RESISTOR,CHIP 100 1/16W 1608
R411	1-216-821-11	s	RESISTOR,CHIP 1.0K 1/16W(1608)
R412	1-216-845-11	s	RESISTOR,CHIP 100K 1/16W(1608)
R413	1-216-845-11	s	RESISTOR,CHIP 100K 1/16W(1608)
R415	1-216-845-11	s	RESISTOR,CHIP 100K 1/16W(1608)
R418	1-218-887-11	s	RESISTOR,CHIP 47K 1/16W (1608)
R419	1-218-871-11	s	RESISTOR,CHIP 10K 1/16W (1608)
R420	1-218-871-11	s	RESISTOR,CHIP 10K 1/16W (1608)
R421	1-218-887-11	s	RESISTOR,CHIP 47K 1/16W (1608)
R422	1-218-887-11	s	RESISTOR,CHIP 47K 1/16W (1608)
R423	1-218-871-11	s	RESISTOR,CHIP 10K 1/16W (1608)
R424	1-218-871-11	s	RESISTOR,CHIP 10K 1/16W (1608)
R425	1-211-737-11	s	RESISTOR 0.47 1/4W (3225)
R426	1-211-737-11	s	RESISTOR 0.47 1/4W (3225)
R427	1-218-883-11	s	RESISTOR,CHIP 33K 1/16W (1608)
R428	1-216-833-11	s	RESISTOR,CHIP 10K 1/16W (1608)
R429	1-216-833-11	s	RESISTOR,CHIP 10K 1/16W (1608)
R430	1-216-847-11	s	RESISTOR, CHIP 150K 1/16W 1608
R431	1-216-833-11	s	RESISTOR,CHIP 10K 1/16W (1608)
R432	1-216-847-11	s	RESISTOR, CHIP 150K 1/16W 1608

(DR-428 BOARD)

Ref. No. or Q'ty	Part No.	SP	Description
R433	1-216-833-11	s	RESISTOR,CHIP 10K 1/16W (1608)
R434	1-216-841-11	s	RESISTOR, CHIP 47K 1/16W 1608
R435	1-216-841-11	s	RESISTOR, CHIP 47K 1/16W 1608
R436	1-216-849-11	s	RESISTOR,CHIP 220K 1/16W 1608
R437	1-216-849-11	s	RESISTOR,CHIP 220K 1/16W 1608
R438	1-211-737-11	s	RESISTOR 0.47 1/4W (3225)
R439	1-211-737-11	s	RESISTOR 0.47 1/4W (3225)
R440	1-216-837-11	s	RESISTOR,CHIP 22K 1/16W 1608
R441	1-216-821-11	s	RESISTOR,CHIP 1.0K 1/16W(1608)
R442	1-216-821-11	s	RESISTOR,CHIP 1.0K 1/16W(1608)
R443	1-216-837-11	s	RESISTOR,CHIP 22K 1/16W 1608
R444	1-216-833-11	s	RESISTOR,CHIP 10K 1/16W (1608)
R445	1-216-845-11	s	RESISTOR,CHIP 100K 1/16W(1608)
R446	1-216-833-11	s	RESISTOR,CHIP 10K 1/16W (1608)
R455	1-216-849-11	s	RESISTOR,CHIP 220K 1/16W 1608
R456	1-216-841-11	s	RESISTOR, CHIP 47K 1/16W 1608
R457	1-218-843-11	s	RESISTOR,CHIP 680 1/16W (1608)
R458	1-216-837-11	s	RESISTOR,CHIP 22K 1/16W 1608
R459	1-216-841-11	s	RESISTOR, CHIP 47K 1/16W 1608
R460	1-216-837-11	s	RESISTOR,CHIP 22K 1/16W 1608
R461	1-216-817-11	s	RESISTOR,CHIP 470 1/16W 1608
R462	1-216-837-11	s	RESISTOR,CHIP 22K 1/16W 1608
R463	1-216-817-11	s	RESISTOR,CHIP 470 1/16W 1608
R464	1-216-817-11	s	RESISTOR,CHIP 470 1/16W 1608
R465	1-216-837-11	s	RESISTOR,CHIP 22K 1/16W 1608
R466	1-216-817-11	s	RESISTOR,CHIP 470 1/16W 1608
R467	1-216-817-11	s	RESISTOR,CHIP 470 1/16W 1608
R468	1-216-817-11	s	RESISTOR,CHIP 470 1/16W 1608
R469	1-216-817-11	s	RESISTOR,CHIP 470 1/16W 1608
R470	1-216-817-11	s	RESISTOR,CHIP 470 1/16W 1608
R471	1-216-849-11	s	RESISTOR,CHIP 220K 1/16W 1608
R472	1-216-849-11	s	RESISTOR,CHIP 220K 1/16W 1608
R473	1-216-849-11	s	RESISTOR,CHIP 220K 1/16W 1608
R474	1-216-849-11	s	RESISTOR,CHIP 220K 1/16W 1608
R475	1-216-849-11	s	RESISTOR,CHIP 220K 1/16W 1608
R476	1-216-849-11	s	RESISTOR,CHIP 220K 1/16W 1608
R477	1-216-849-11	s	RESISTOR,CHIP 220K 1/16W 1608
R478	1-216-849-11	s	RESISTOR,CHIP 220K 1/16W 1608
R479	1-216-841-11	s	RESISTOR, CHIP 47K 1/16W 1608
R480	1-216-841-11	s	RESISTOR, CHIP 47K 1/16W 1608
R481	1-216-841-11	s	RESISTOR, CHIP 47K 1/16W 1608
R482	1-216-841-11	s	RESISTOR, CHIP 47K 1/16W 1608
R483	1-216-841-11	s	RESISTOR, CHIP 47K 1/16W 1608
R484	1-216-841-11	s	RESISTOR, CHIP 47K 1/16W 1608
R485	1-216-841-11	s	RESISTOR, CHIP 47K 1/16W 1608
R486	1-216-841-11	s	RESISTOR, CHIP 47K 1/16W 1608
R487	1-218-855-11	s	RESISTOR,CHIP 2.2K 1/16W(1608)
R488	1-216-296-91	s	CONDUCTOR, CHIP (3216)
R489	1-216-296-91	s	CONDUCTOR, CHIP (3216)
R490	1-216-849-11	s	RESISTOR,CHIP 220K 1/16W 1608
R491	1-216-841-11	s	RESISTOR, CHIP 47K 1/16W 1608
R492	1-216-849-11	s	RESISTOR,CHIP 220K 1/16W 1608
R493	1-216-841-11	s	RESISTOR, CHIP 47K 1/16W 1608
RB1	1-236-907-11	s	RESISTOR BLOCK 100K (1608)
RB2	1-236-907-11	s	RESISTOR BLOCK 100K (1608)
RB3	1-236-907-11	s	RESISTOR BLOCK 100K (1608)
RB4	1-239-436-11	s	RESISTOR, NETWORK 33K (1608)
RB6	1-239-286-11	s	RESISTOR,NETWORK 22K (1608)

(DR-428 BOARD)

Ref. No. or Q'ty	Part No.	SP	Description
RB7	1-239-412-11	s	NETWORK, RESISTOR 100 (1608)
RB8	1-239-412-11	s	NETWORK, RESISTOR 100 (1608)
RB9	1-239-412-11	s	NETWORK, RESISTOR 100 (1608)
RB10	1-239-412-11	s	NETWORK, RESISTOR 100 (1608)
RB11	1-239-286-11	s	RESISTOR,NETWORK 22K (1608)
RB12	1-239-412-11	s	NETWORK, RESISTOR 100 (1608)
RB13	1-239-412-11	s	NETWORK, RESISTOR 100 (1608)
RB14 *2	1-236-904-11	s	RESISTOR,NETWORK 1.0K
RB15 *2	1-236-904-11	s	RESISTOR,NETWORK 1.0K
RB16 *2	1-236-904-11	s	RESISTOR,NETWORK 1.0K
RB101	1-236-908-11	s	RESISTOR,NETWORK 10K (3216)
RB102	1-236-908-11	s	RESISTOR,NETWORK 10K (3216)
RB401	1-236-907-11	s	RESISTOR BLOCK 100K (1608)
RB402	1-236-907-11	s	RESISTOR BLOCK 100K (1608)
RB403	1-236-907-11	s	RESISTOR BLOCK 100K (1608)
RB404	1-236-907-11	s	RESISTOR BLOCK 100K (1608)
X1	1-579-996-21	s	VIBRATOR, CERAMIC

DY-16 BOARD

Ref. No. or Q'ty	Part No.	SP	Description
1pc	A-8326-507-A	o	MOUNTED CIRCUIT BOARD, DY-16
C100	1-163-133-00	s	CAPACITOR,CHIP CERAMIC 470PF
C101	1-126-393-11	s	CAPACITOR ELECT 33MF/10V(CHIP)
C102	1-165-319-11	s	CAPACITOR,CERAMIC 0.1MF/50V
C103	1-128-399-11	s	CAPACITOR ELECT 330MF/16V(CHIP
C104	1-128-399-11	s	CAPACITOR ELECT 330MF/16V(CHIP
C105	1-163-019-00	s	CAPACITOR,CHIP CERAMIC 6800PF
C106	1-165-319-11	s	CAPACITOR,CERAMIC 0.1MF/50V
C107	1-128-405-11	s	CAPACITOR.ELECT 22MF/50V(CHIP)
C108	1-128-405-11	s	CAPACITOR.ELECT 22MF/50V(CHIP)
C109	1-128-405-11	s	CAPACITOR.ELECT 22MF/50V(CHIP)
C110	1-128-405-11	s	CAPACITOR.ELECT 22MF/50V(CHIP)
C111	1-128-405-11	s	CAPACITOR.ELECT 22MF/50V(CHIP)
C113	1-126-396-11	s	CAPACITOR,ELECT 47MF/16V(CHIP)
C200	1-163-251-11	s	CAPACITOR CERAMIC 100PF/50V
C201	1-163-251-11	s	CAPACITOR CERAMIC 100PF/50V
C202	1-163-251-11	s	CAPACITOR CERAMIC 100PF/50V
C203	1-163-251-11	s	CAPACITOR CERAMIC 100PF/50V
C204	1-163-251-11	s	CAPACITOR CERAMIC 100PF/50V
C205	1-163-251-11	s	CAPACITOR CERAMIC 100PF/50V
C206	1-163-251-11	s	CAPACITOR CERAMIC 100PF/50V
C207	1-163-251-11	s	CAPACITOR CERAMIC 100PF/50V
C208	1-163-251-11	s	CAPACITOR CERAMIC 100PF/50V
C209	1-163-251-11	s	CAPACITOR CERAMIC 100PF/50V
C210	1-163-251-11	s	CAPACITOR CERAMIC 100PF/50V
C211	1-163-251-11	s	CAPACITOR CERAMIC 100PF/50V
C212	1-163-251-11	s	CAPACITOR CERAMIC 100PF/50V
C213	1-163-251-11	s	CAPACITOR CERAMIC 100PF/50V
C214	1-163-251-11	s	CAPACITOR CERAMIC 100PF/50V
C215	1-163-251-11	s	CAPACITOR CERAMIC 100PF/50V
C216	1-163-251-11	s	CAPACITOR CERAMIC 100PF/50V
C217	1-163-251-11	s	CAPACITOR CERAMIC 100PF/50V
C218	1-163-251-11	s	CAPACITOR CERAMIC 100PF/50V
C219	1-163-251-11	s	CAPACITOR CERAMIC 100PF/50V
C220	1-163-251-11	s	CAPACITOR CERAMIC 100PF/50V
C221	1-163-251-11	s	CAPACITOR CERAMIC 100PF/50V
C222	1-163-251-11	s	CAPACITOR CERAMIC 100PF/50V
C223	1-163-251-11	s	CAPACITOR CERAMIC 100PF/50V
C224	1-163-251-11	s	CAPACITOR CERAMIC 100PF/50V
C225	1-163-251-11	s	CAPACITOR CERAMIC 100PF/50V
C226	1-163-251-11	s	CAPACITOR CERAMIC 100PF/50V
C227	1-163-251-11	s	CAPACITOR CERAMIC 100PF/50V
C228	1-163-251-11	s	CAPACITOR CERAMIC 100PF/50V
C229	1-163-251-11	s	CAPACITOR CERAMIC 100PF/50V
C230	1-163-251-11	s	CAPACITOR CERAMIC 100PF/50V
C231	1-163-251-11	s	CAPACITOR CERAMIC 100PF/50V
C232	1-163-251-11	s	CAPACITOR CERAMIC 100PF/50V
C233	1-163-251-11	s	CAPACITOR CERAMIC 100PF/50V
C234	1-163-251-11	s	CAPACITOR CERAMIC 100PF/50V
C235	1-163-251-11	s	CAPACITOR CERAMIC 100PF/50V
C236	1-163-251-11	s	CAPACITOR CERAMIC 100PF/50V
C237	1-163-251-11	s	CAPACITOR CERAMIC 100PF/50V
C238	1-163-251-11	s	CAPACITOR CERAMIC 100PF/50V
C239	1-163-251-11	s	CAPACITOR CERAMIC 100PF/50V
CN2	1-774-869-11	o	HOUSING, CONNECTOR
D100	8-719-110-02	s	DIODE RD7.5ES-B1
D101	8-719-110-12	s	DIODE RD9.1ES-B1

(DY-16 BOARD)

Ref. No. or Q'ty	Part No.	SP	Description
D102	8-719-108-24	s	DIODE 1SS223
D103	8-719-110-12	s	DIODE RD9.1ES-B1
D104	8-719-110-12	s	DIODE RD9.1ES-B1
D105	8-719-051-03	s	DIODE EC11FS4-TE12L5
D106	8-719-109-93	s	DIODE RD6.2ES-B2
IC100	8-759-350-99	s	IC M66004M6FP200D
L101	1-406-824-11	s	COIL, CHOKE 22UH
L102	1-406-824-11	s	COIL, CHOKE 22UH
Q100	8-729-230-49	s	TRANSISTOR 2SC2712-YG
Q101	8-729-202-37	s	TRANSISTOR 2SC3303-Y
Q200	8-729-106-68	s	TRANSISTOR 2SD1615A-GP
Q201	8-729-216-22	s	TRANSISTOR 2SA1162-G
Q202	8-729-019-87	s	TRANSISTOR 2SC3392-6-TB
Q203	8-729-216-22	s	TRANSISTOR 2SA1162-G
Q204	8-729-019-87	s	TRANSISTOR 2SC3392-6-TB
Q205	8-729-216-22	s	TRANSISTOR 2SA1162-G
Q206	8-729-019-87	s	TRANSISTOR 2SC3392-6-TB
Q207	8-729-216-22	s	TRANSISTOR 2SA1162-G
Q208	8-729-019-87	s	TRANSISTOR 2SC3392-6-TB
Q209	8-729-216-22	s	TRANSISTOR 2SA1162-G
Q210	8-729-019-87	s	TRANSISTOR 2SC3392-6-TB
Q211	8-729-216-22	s	TRANSISTOR 2SA1162-G
Q212	8-729-019-87	s	TRANSISTOR 2SC3392-6-TB
Q213	8-729-216-22	s	TRANSISTOR 2SA1162-G
Q214	8-729-019-87	s	TRANSISTOR 2SC3392-6-TB
Q215	8-729-216-22	s	TRANSISTOR 2SA1162-G
Q216	8-729-019-87	s	TRANSISTOR 2SC3392-6-TB
Q217	8-729-216-22	s	TRANSISTOR 2SA1162-G
Q218	8-729-019-87	s	TRANSISTOR 2SC3392-6-TB
Q219	8-729-216-22	s	TRANSISTOR 2SA1162-G
Q220	8-729-019-87	s	TRANSISTOR 2SC3392-6-TB
Q221	8-729-216-22	s	TRANSISTOR 2SA1162-G
Q222	8-729-019-87	s	TRANSISTOR 2SC3392-6-TB
Q223	8-729-216-22	s	TRANSISTOR 2SA1162-G
Q224	8-729-019-87	s	TRANSISTOR 2SC3392-6-TB
Q225	8-729-216-22	s	TRANSISTOR 2SA1162-G
Q226	8-729-019-87	s	TRANSISTOR 2SC3392-6-TB
Q227	8-729-216-22	s	TRANSISTOR 2SA1162-G
Q228	8-729-019-87	s	TRANSISTOR 2SC3392-6-TB
Q229	8-729-216-22	s	TRANSISTOR 2SA1162-G
Q230	8-729-019-87	s	TRANSISTOR 2SC3392-6-TB
Q231	8-729-216-22	s	TRANSISTOR 2SA1162-G
Q232	8-729-019-87	s	TRANSISTOR 2SC3392-6-TB
Q233	8-729-216-22	s	TRANSISTOR 2SA1162-G
Q234	8-729-019-87	s	TRANSISTOR 2SC3392-6-TB
Q235	8-729-216-22	s	TRANSISTOR 2SA1162-G
Q236	8-729-019-87	s	TRANSISTOR 2SC3392-6-TB
Q237	8-729-216-22	s	TRANSISTOR 2SA1162-G
Q238	8-729-019-87	s	TRANSISTOR 2SC3392-6-TB
Q239	8-729-216-22	s	TRANSISTOR 2SA1162-G
Q240	8-729-019-87	s	TRANSISTOR 2SC3392-6-TB
Q241	8-729-216-22	s	TRANSISTOR 2SA1162-G
Q242	8-729-019-87	s	TRANSISTOR 2SC3392-6-TB
Q243	8-729-216-22	s	TRANSISTOR 2SA1162-G
Q244	8-729-019-87	s	TRANSISTOR 2SC3392-6-TB
Q245	8-729-216-22	s	TRANSISTOR 2SA1162-G
Q246	8-729-019-87	s	TRANSISTOR 2SC3392-6-TB
Q247	8-729-216-22	s	TRANSISTOR 2SA1162-G

http://getMANUAL.com

(DY-16 BOARD)

Ref. No. or Q'ty	Part No.	SP	Description
Q248	8-729-019-87	s	TRANSISTOR 2SC3392-6-TB
Q249	8-729-216-22	s	TRANSISTOR 2SA1162-G
Q250	8-729-019-87	s	TRANSISTOR 2SC3392-6-TB
Q251	8-729-216-22	s	TRANSISTOR 2SA1162-G
Q252	8-729-019-87	s	TRANSISTOR 2SC3392-6-TB
Q253	8-729-216-22	s	TRANSISTOR 2SA1162-G
Q254	8-729-019-87	s	TRANSISTOR 2SC3392-6-TB
Q255	8-729-216-22	s	TRANSISTOR 2SA1162-G
Q256	8-729-019-87	s	TRANSISTOR 2SC3392-6-TB
Q257	8-729-216-22	s	TRANSISTOR 2SA1162-G
Q258	8-729-019-87	s	TRANSISTOR 2SC3392-6-TB
Q259	8-729-216-22	s	TRANSISTOR 2SA1162-G
Q260	8-729-019-87	s	TRANSISTOR 2SC3392-6-TB
Q261	8-729-216-22	s	TRANSISTOR 2SA1162-G
Q262	8-729-019-87	s	TRANSISTOR 2SC3392-6-TB
Q263	8-729-216-22	s	TRANSISTOR 2SA1162-G
Q264	8-729-019-87	s	TRANSISTOR 2SC3392-6-TB
Q265	8-729-216-22	s	TRANSISTOR 2SA1162-G
Q266	8-729-019-87	s	TRANSISTOR 2SC3392-6-TB
Q267	8-729-216-22	s	TRANSISTOR 2SA1162-G
Q268	8-729-019-87	s	TRANSISTOR 2SC3392-6-TB
Q269	8-729-216-22	s	TRANSISTOR 2SA1162-G
Q270	8-729-019-87	s	TRANSISTOR 2SC3392-6-TB
Q271	8-729-216-22	s	TRANSISTOR 2SA1162-G
Q272	8-729-019-87	s	TRANSISTOR 2SC3392-6-TB
Q273	8-729-216-22	s	TRANSISTOR 2SA1162-G
Q274	8-729-019-87	s	TRANSISTOR 2SC3392-6-TB
Q275	8-729-216-22	s	TRANSISTOR 2SA1162-G
Q276	8-729-019-87	s	TRANSISTOR 2SC3392-6-TB
Q277	8-729-216-22	s	TRANSISTOR 2SA1162-G
Q278	8-729-019-87	s	TRANSISTOR 2SC3392-6-TB
Q279	8-729-216-22	s	TRANSISTOR 2SA1162-G
R101	1-216-049-11	s	RESISTOR, CHIP 1K 1/10W(2012)
R102	1-216-049-11	s	RESISTOR, CHIP 1K 1/10W(2012)
R103	1-216-037-00	s	RESISTOR,CHIP 330 1/10W(2012)
R104	1-216-021-00	s	RESISTOR,CHIP 68 1/10W(2012)
R105	1-216-043-91	s	RESISTOR, CHIP 560 1/10W(2125)
R106	1-216-093-00	s	RESISTOR, CHIP 68K 1/10W(2012)
R200	1-216-025-00	s	RESISTOR,CHIP 100 1/10W(2012)
R201	1-216-025-00	s	RESISTOR,CHIP 100 1/10W(2012)
R202	1-216-025-00	s	RESISTOR,CHIP 100 1/10W(2012)
R203	1-216-025-00	s	RESISTOR,CHIP 100 1/10W(2012)
R204	1-216-025-00	s	RESISTOR,CHIP 100 1/10W(2012)
R205	1-216-025-00	s	RESISTOR,CHIP 100 1/10W(2012)
R206	1-216-025-00	s	RESISTOR,CHIP 100 1/10W(2012)
R207	1-216-025-00	s	RESISTOR,CHIP 100 1/10W(2012)
R208	1-216-025-00	s	RESISTOR,CHIP 100 1/10W(2012)
R209	1-216-025-00	s	RESISTOR,CHIP 100 1/10W(2012)
R210	1-216-025-00	s	RESISTOR,CHIP 100 1/10W(2012)
R211	1-216-025-00	s	RESISTOR,CHIP 100 1/10W(2012)
R212	1-216-025-00	s	RESISTOR,CHIP 100 1/10W(2012)
R213	1-216-025-00	s	RESISTOR,CHIP 100 1/10W(2012)
R214	1-216-025-00	s	RESISTOR,CHIP 100 1/10W(2012)
R215	1-216-025-00	s	RESISTOR,CHIP 100 1/10W(2012)
R216	1-216-025-00	s	RESISTOR,CHIP 100 1/10W(2012)
R217	1-216-025-00	s	RESISTOR,CHIP 100 1/10W(2012)
R218	1-216-025-00	s	RESISTOR,CHIP 100 1/10W(2012)
R219	1-216-025-00	s	RESISTOR,CHIP 100 1/10W(2012)

(DY-16 BOARD)

Ref. No. or Q'ty	Part No.	SP	Description
R220	1-216-025-00	s	RESISTOR,CHIP 100 1/10W(2012)
R221	1-216-025-00	s	RESISTOR,CHIP 100 1/10W(2012)
R222	1-216-025-00	s	RESISTOR,CHIP 100 1/10W(2012)
R223	1-216-025-00	s	RESISTOR,CHIP 100 1/10W(2012)
R224	1-216-025-00	s	RESISTOR,CHIP 100 1/10W(2012)
R225	1-216-025-00	s	RESISTOR,CHIP 100 1/10W(2012)
R226	1-216-025-00	s	RESISTOR,CHIP 100 1/10W(2012)
R227	1-216-025-00	s	RESISTOR,CHIP 100 1/10W(2012)
R228	1-216-025-00	s	RESISTOR,CHIP 100 1/10W(2012)
R229	1-216-025-00	s	RESISTOR,CHIP 100 1/10W(2012)
R230	1-216-025-00	s	RESISTOR,CHIP 100 1/10W(2012)
R231	1-216-025-00	s	RESISTOR,CHIP 100 1/10W(2012)
R232	1-216-025-00	s	RESISTOR,CHIP 100 1/10W(2012)
R233	1-216-025-00	s	RESISTOR,CHIP 100 1/10W(2012)
R234	1-216-025-00	s	RESISTOR,CHIP 100 1/10W(2012)
R235	1-216-025-00	s	RESISTOR,CHIP 100 1/10W(2012)
R236	1-216-025-00	s	RESISTOR,CHIP 100 1/10W(2012)
R237	1-216-025-00	s	RESISTOR,CHIP 100 1/10W(2012)
R238	1-216-025-00	s	RESISTOR,CHIP 100 1/10W(2012)
R239	1-216-025-00	s	RESISTOR,CHIP 100 1/10W(2012)
RB100	1-239-389-11	s	RESISTOR,NETWORK 47K (1608)
T100	1-435-185-11	s	TRANSFORMER, CONVERTER

FU-78P BOARD

Ref. No. or Q'ty	Part No.	SP	Description
1pc	A-8326-493-A	o	MOUNTED CIRCUIT BOARD, FU-78P
C1	1-104-851-11	s	CAPACITOR,TANTALUM 10MF/10V
C2	1-107-826-11	s	CAPACITOR,CHIP CERAMIC 0.1MF
C3	1-107-826-11	s	CAPACITOR,CHIP CERAMIC 0.1MF
C4	1-107-826-11	s	CAPACITOR,CHIP CERAMIC 0.1MF
C5	1-107-826-11	s	CAPACITOR,CHIP CERAMIC 0.1MF
C6	1-107-826-11	s	CAPACITOR,CHIP CERAMIC 0.1MF
C7	1-107-826-11	s	CAPACITOR,CHIP CERAMIC 0.1MF
C8	1-107-826-11	s	CAPACITOR,CHIP CERAMIC 0.1MF
C9	1-107-826-11	s	CAPACITOR,CHIP CERAMIC 0.1MF
C10	1-107-826-11	s	CAPACITOR,CHIP CERAMIC 0.1MF
C11	1-107-826-11	s	CAPACITOR,CHIP CERAMIC 0.1MF
C12	1-107-826-11	s	CAPACITOR,CHIP CERAMIC 0.1MF
C13	1-107-826-11	s	CAPACITOR,CHIP CERAMIC 0.1MF
C14	1-107-826-11	s	CAPACITOR,CHIP CERAMIC 0.1MF
C15	1-107-826-11	s	CAPACITOR,CHIP CERAMIC 0.1MF
C16	1-107-826-11	s	CAPACITOR,CHIP CERAMIC 0.1MF
C17	1-128-964-11	s	CAPACITOR, C.TANTAL 100MF6.3V
C18	1-107-826-11	s	CAPACITOR,CHIP CERAMIC 0.1MF
C19	1-107-826-11	s	CAPACITOR,CHIP CERAMIC 0.1MF
C20	1-107-826-11	s	CAPACITOR,CHIP CERAMIC 0.1MF
C21	1-107-826-11	s	CAPACITOR,CHIP CERAMIC 0.1MF
C22	1-104-851-11	s	CAPACITOR,TANTALUM 10MF/10V
C23	1-107-826-11	s	CAPACITOR,CHIP CERAMIC 0.1MF
C24	1-107-826-11	s	CAPACITOR,CHIP CERAMIC 0.1MF
C25	1-107-826-11	s	CAPACITOR,CHIP CERAMIC 0.1MF
C26	1-107-826-11	s	CAPACITOR,CHIP CERAMIC 0.1MF
C27	1-107-826-11	s	CAPACITOR,CHIP CERAMIC 0.1MF
C28	1-107-826-11	s	CAPACITOR,CHIP CERAMIC 0.1MF
C29	1-107-826-11	s	CAPACITOR,CHIP CERAMIC 0.1MF
C30	1-107-826-11	s	CAPACITOR,CHIP CERAMIC 0.1MF
C31	1-107-826-11	s	CAPACITOR,CHIP CERAMIC 0.1MF
C32	1-107-826-11	s	CAPACITOR,CHIP CERAMIC 0.1MF
C33	1-107-826-11	s	CAPACITOR,CHIP CERAMIC 0.1MF
C34	1-107-826-11	s	CAPACITOR,CHIP CERAMIC 0.1MF
C35	1-107-826-11	s	CAPACITOR,CHIP CERAMIC 0.1MF
C36	1-107-826-11	s	CAPACITOR,CHIP CERAMIC 0.1MF
C37	1-107-826-11	s	CAPACITOR,CHIP CERAMIC 0.1MF
C38	1-107-826-11	s	CAPACITOR,CHIP CERAMIC 0.1MF
C39	1-107-826-11	s	CAPACITOR,CHIP CERAMIC 0.1MF
C40	1-107-826-11	s	CAPACITOR,CHIP CERAMIC 0.1MF
C41	1-107-826-11	s	CAPACITOR,CHIP CERAMIC 0.1MF
C42	1-107-826-11	s	CAPACITOR,CHIP CERAMIC 0.1MF
C43	1-107-826-11	s	CAPACITOR,CHIP CERAMIC 0.1MF
C44	1-107-826-11	s	CAPACITOR,CHIP CERAMIC 0.1MF
C45	1-107-826-11	s	CAPACITOR,CHIP CERAMIC 0.1MF
C46	1-107-826-11	s	CAPACITOR,CHIP CERAMIC 0.1MF
C47	1-107-826-11	s	CAPACITOR,CHIP CERAMIC 0.1MF
C48	1-107-826-11	s	CAPACITOR,CHIP CERAMIC 0.1MF
C49	1-107-826-11	s	CAPACITOR,CHIP CERAMIC 0.1MF
C50	1-107-826-11	s	CAPACITOR,CHIP CERAMIC 0.1MF
C51	1-104-851-11	s	CAPACITOR,TANTALUM 10MF/10V
C52	1-107-826-11	s	CAPACITOR,CHIP CERAMIC 0.1MF
C53	1-107-826-11	s	CAPACITOR,CHIP CERAMIC 0.1MF
C54	1-107-826-11	s	CAPACITOR,CHIP CERAMIC 0.1MF
C55	1-107-826-11	s	CAPACITOR,CHIP CERAMIC 0.1MF
C56	1-107-826-11	s	CAPACITOR,CHIP CERAMIC 0.1MF
C57	1-107-826-11	s	CAPACITOR,CHIP CERAMIC 0.1MF

(FU-78P BOARD)

Ref. No. or Q'ty	Part No.	SP	Description
C58	1-107-826-11	s	CAPACITOR,CHIP CERAMIC 0.1MF
C59	1-107-826-11	s	CAPACITOR,CHIP CERAMIC 0.1MF
C60	1-107-826-11	s	CAPACITOR,CHIP CERAMIC 0.1MF
C61	1-107-826-11	s	CAPACITOR,CHIP CERAMIC 0.1MF
C62	1-107-826-11	s	CAPACITOR,CHIP CERAMIC 0.1MF
C63	1-107-826-11	s	CAPACITOR,CHIP CERAMIC 0.1MF
C64	1-107-826-11	s	CAPACITOR,CHIP CERAMIC 0.1MF
C65	1-107-826-11	s	CAPACITOR,CHIP CERAMIC 0.1MF
C66	1-107-826-11	s	CAPACITOR,CHIP CERAMIC 0.1MF
C67	1-107-826-11	s	CAPACITOR,CHIP CERAMIC 0.1MF
C68	1-107-826-11	s	CAPACITOR,CHIP CERAMIC 0.1MF
C69	1-107-826-11	s	CAPACITOR,CHIP CERAMIC 0.1MF
C70	1-107-826-11	s	CAPACITOR,CHIP CERAMIC 0.1MF
C71	1-107-826-11	s	CAPACITOR,CHIP CERAMIC 0.1MF
C72	1-107-826-11	s	CAPACITOR,CHIP CERAMIC 0.1MF
C73	1-107-826-11	s	CAPACITOR,CHIP CERAMIC 0.1MF
C74	1-107-826-11	s	CAPACITOR,CHIP CERAMIC 0.1MF
C75	1-107-826-11	s	CAPACITOR,CHIP CERAMIC 0.1MF
C76	1-107-826-11	s	CAPACITOR,CHIP CERAMIC 0.1MF
C77	1-107-826-11	s	CAPACITOR,CHIP CERAMIC 0.1MF
C78	1-107-826-11	s	CAPACITOR,CHIP CERAMIC 0.1MF
C79	1-107-826-11	s	CAPACITOR,CHIP CERAMIC 0.1MF
C80	1-107-826-11	s	CAPACITOR,CHIP CERAMIC 0.1MF
C81	1-107-826-11	s	CAPACITOR,CHIP CERAMIC 0.1MF
C82	1-107-826-11	s	CAPACITOR,CHIP CERAMIC 0.1MF
C83	1-107-826-11	s	CAPACITOR,CHIP CERAMIC 0.1MF
C84	1-107-826-11	s	CAPACITOR,CHIP CERAMIC 0.1MF
C85	1-107-826-11	s	CAPACITOR,CHIP CERAMIC 0.1MF
C86	1-107-826-11	s	CAPACITOR,CHIP CERAMIC 0.1MF
C87	1-107-826-11	s	CAPACITOR,CHIP CERAMIC 0.1MF
C88	1-107-826-11	s	CAPACITOR,CHIP CERAMIC 0.1MF
C89	1-107-826-11	s	CAPACITOR,CHIP CERAMIC 0.1MF
C90	1-107-826-11	s	CAPACITOR,CHIP CERAMIC 0.1MF
C91	1-104-851-11	s	CAPACITOR,TANTALUM 10MF/10V
CN11	1-778-003-11	o	CONNECTOR, BOARD TO BOARD 80P
CN12	1-778-003-11	o	CONNECTOR, BOARD TO BOARD 80P
IC1	8-759-567-07	s	IC CXD8763AR
IC2	8-749-017-21	s	IC SI-3025LS-TL
IC6	8-759-559-40	s	IC MB811643242A-100FN
IC7	8-759-426-26	s	IC CXD8608R
IC8	8-759-426-26	s	IC CXD8608R
IC9	8-759-426-26	s	IC CXD8608R
IC10	8-759-426-26	s	IC CXD8608R
L1	1-414-398-11	s	INDUCTOR (SMD) 10UH
L2	1-414-398-11	s	INDUCTOR (SMD) 10UH
L3	1-414-398-11	s	INDUCTOR (SMD) 10UH
L4	1-414-398-11	s	INDUCTOR (SMD) 10UH
R1	1-216-841-11	s	RESISTOR, CHIP 47K 1/16W 1608
R2	1-216-841-11	s	RESISTOR, CHIP 47K 1/16W 1608
R3	1-216-864-11	s	RESISTOR,CHIP 0 1/16W (1608)
R4	1-216-864-11	s	RESISTOR,CHIP 0 1/16W (1608)
R6	1-216-864-11	s	RESISTOR,CHIP 0 1/16W (1608)
R7	1-216-864-11	s	RESISTOR,CHIP 0 1/16W (1608)
R8	1-216-864-11	s	RESISTOR,CHIP 0 1/16W (1608)
R9	1-216-864-11	s	RESISTOR,CHIP 0 1/16W (1608)
R11	1-216-864-11	s	RESISTOR,CHIP 0 1/16W (1608)
R13	1-216-864-11	s	RESISTOR,CHIP 0 1/16W (1608)

(FU-78P BOARD)

Ref. No. or Q'ty	Part No.	SP	Description
R14	1-216-864-11	s	RESISTOR,CHIP 0 1/16W (1608)
R15	1-216-864-11	s	RESISTOR,CHIP 0 1/16W (1608)
R17	1-216-864-11	s	RESISTOR,CHIP 0 1/16W (1608)
R18	1-216-864-11	s	RESISTOR,CHIP 0 1/16W (1608)
R19	1-216-864-11	s	RESISTOR,CHIP 0 1/16W (1608)
R20	1-216-864-11	s	RESISTOR,CHIP 0 1/16W (1608)
R21	1-216-864-11	s	RESISTOR,CHIP 0 1/16W (1608)
R22	1-216-864-11	s	RESISTOR,CHIP 0 1/16W (1608)
R24	1-216-864-11	s	RESISTOR,CHIP 0 1/16W (1608)
R29	1-216-864-11	s	RESISTOR,CHIP 0 1/16W (1608)
R30	1-216-864-11	s	RESISTOR,CHIP 0 1/16W (1608)
R31	1-216-829-11	s	RESISTOR,CHIP 4.7K 1/16W(1608)
R32	1-216-829-11	s	RESISTOR,CHIP 4.7K 1/16W(1608)
R34	1-216-864-11	s	RESISTOR,CHIP 0 1/16W (1608)
RB1	1-239-389-11	s	RESISTOR,NETWORK 47K (1608)
RB2	1-239-389-11	s	RESISTOR,NETWORK 47K (1608)
RB3	1-239-389-11	s	RESISTOR,NETWORK 47K (1608)
RB4	1-239-389-11	s	RESISTOR,NETWORK 47K (1608)

FU-78R BOARD (for DSR-1800/P)

Ref. No. or Q'ty	Part No.	SP	Description
1pc	A-8326-492-A	o	MOUNTED CIRCUIT BOARD, FU-78R
C1	1-104-851-11	s	CAPACITOR,TANTALUM 10MF/10V
C2	1-107-826-11	s	CAPACITOR,CHIP CERAMIC 0.1MF
C3	1-107-826-11	s	CAPACITOR,CHIP CERAMIC 0.1MF
C4	1-107-826-11	s	CAPACITOR,CHIP CERAMIC 0.1MF
C5	1-107-826-11	s	CAPACITOR,CHIP CERAMIC 0.1MF
C6	1-107-826-11	s	CAPACITOR,CHIP CERAMIC 0.1MF
C7	1-107-826-11	s	CAPACITOR,CHIP CERAMIC 0.1MF
C8	1-107-826-11	s	CAPACITOR,CHIP CERAMIC 0.1MF
C9	1-107-826-11	s	CAPACITOR,CHIP CERAMIC 0.1MF
C10	1-107-826-11	s	CAPACITOR,CHIP CERAMIC 0.1MF
C11	1-107-826-11	s	CAPACITOR,CHIP CERAMIC 0.1MF
C12	1-107-826-11	s	CAPACITOR,CHIP CERAMIC 0.1MF
C13	1-107-826-11	s	CAPACITOR,CHIP CERAMIC 0.1MF
C14	1-107-826-11	s	CAPACITOR,CHIP CERAMIC 0.1MF
C15	1-107-826-11	s	CAPACITOR,CHIP CERAMIC 0.1MF
C16	1-107-826-11	s	CAPACITOR,CHIP CERAMIC 0.1MF
C17	1-128-964-11	s	CAPACITOR, C.TANTAL 100MF6.3V
C18	1-107-826-11	s	CAPACITOR,CHIP CERAMIC 0.1MF
C19	1-107-826-11	s	CAPACITOR,CHIP CERAMIC 0.1MF
C20	1-107-826-11	s	CAPACITOR,CHIP CERAMIC 0.1MF
C21	1-107-826-11	s	CAPACITOR,CHIP CERAMIC 0.1MF
C22	1-104-851-11	s	CAPACITOR,TANTALUM 10MF/10V
C23	1-107-826-11	s	CAPACITOR,CHIP CERAMIC 0.1MF
C24	1-107-826-11	s	CAPACITOR,CHIP CERAMIC 0.1MF
C25	1-107-826-11	s	CAPACITOR,CHIP CERAMIC 0.1MF
C26	1-107-826-11	s	CAPACITOR,CHIP CERAMIC 0.1MF
C27	1-107-826-11	s	CAPACITOR,CHIP CERAMIC 0.1MF
C28	1-107-826-11	s	CAPACITOR,CHIP CERAMIC 0.1MF
C29	1-107-826-11	s	CAPACITOR,CHIP CERAMIC 0.1MF
C30	1-107-826-11	s	CAPACITOR,CHIP CERAMIC 0.1MF
C31	1-107-826-11	s	CAPACITOR,CHIP CERAMIC 0.1MF
C32	1-107-826-11	s	CAPACITOR,CHIP CERAMIC 0.1MF
C33	1-107-826-11	s	CAPACITOR,CHIP CERAMIC 0.1MF
C34	1-107-826-11	s	CAPACITOR,CHIP CERAMIC 0.1MF
C35	1-107-826-11	s	CAPACITOR,CHIP CERAMIC 0.1MF
C36	1-107-826-11	s	CAPACITOR,CHIP CERAMIC 0.1MF
C37	1-107-826-11	s	CAPACITOR,CHIP CERAMIC 0.1MF
C38	1-107-826-11	s	CAPACITOR,CHIP CERAMIC 0.1MF
C39	1-107-826-11	s	CAPACITOR,CHIP CERAMIC 0.1MF
C40	1-107-826-11	s	CAPACITOR,CHIP CERAMIC 0.1MF
C41	1-107-826-11	s	CAPACITOR,CHIP CERAMIC 0.1MF
C42	1-107-826-11	s	CAPACITOR,CHIP CERAMIC 0.1MF
C43	1-107-826-11	s	CAPACITOR,CHIP CERAMIC 0.1MF
C44	1-107-826-11	s	CAPACITOR,CHIP CERAMIC 0.1MF
C45	1-107-826-11	s	CAPACITOR,CHIP CERAMIC 0.1MF
C46	1-107-826-11	s	CAPACITOR,CHIP CERAMIC 0.1MF
C47	1-107-826-11	s	CAPACITOR,CHIP CERAMIC 0.1MF
C48	1-107-826-11	s	CAPACITOR,CHIP CERAMIC 0.1MF
C49	1-107-826-11	s	CAPACITOR,CHIP CERAMIC 0.1MF
C50	1-107-826-11	s	CAPACITOR,CHIP CERAMIC 0.1MF
C51	1-104-851-11	s	CAPACITOR,TANTALUM 10MF/10V
C52	1-107-826-11	s	CAPACITOR,CHIP CERAMIC 0.1MF
C53	1-107-826-11	s	CAPACITOR,CHIP CERAMIC 0.1MF
C54	1-107-826-11	s	CAPACITOR,CHIP CERAMIC 0.1MF
C55	1-107-826-11	s	CAPACITOR,CHIP CERAMIC 0.1MF
C56	1-107-826-11	s	CAPACITOR,CHIP CERAMIC 0.1MF
C57	1-107-826-11	s	CAPACITOR,CHIP CERAMIC 0.1MF

(FU-78R BOARD (for DSR-1800/P))

Ref. No. or Q'ty	Part No.	SP	Description
C58	1-107-826-11	s	CAPACITOR,CHIP CERAMIC 0.1MF
C59	1-107-826-11	s	CAPACITOR,CHIP CERAMIC 0.1MF
C60	1-107-826-11	s	CAPACITOR,CHIP CERAMIC 0.1MF
C61	1-107-826-11	s	CAPACITOR,CHIP CERAMIC 0.1MF
C62	1-107-826-11	s	CAPACITOR,CHIP CERAMIC 0.1MF
C63	1-107-826-11	s	CAPACITOR,CHIP CERAMIC 0.1MF
C64	1-107-826-11	s	CAPACITOR,CHIP CERAMIC 0.1MF
C65	1-107-826-11	s	CAPACITOR,CHIP CERAMIC 0.1MF
C66	1-107-826-11	s	CAPACITOR,CHIP CERAMIC 0.1MF
C67	1-107-826-11	s	CAPACITOR,CHIP CERAMIC 0.1MF
C68	1-107-826-11	s	CAPACITOR,CHIP CERAMIC 0.1MF
C69	1-107-826-11	s	CAPACITOR,CHIP CERAMIC 0.1MF
C70	1-107-826-11	s	CAPACITOR,CHIP CERAMIC 0.1MF
C71	1-107-826-11	s	CAPACITOR,CHIP CERAMIC 0.1MF
C72	1-107-826-11	s	CAPACITOR,CHIP CERAMIC 0.1MF
C73	1-107-826-11	s	CAPACITOR,CHIP CERAMIC 0.1MF
C74	1-107-826-11	s	CAPACITOR,CHIP CERAMIC 0.1MF
C75	1-107-826-11	s	CAPACITOR,CHIP CERAMIC 0.1MF
C76	1-107-826-11	s	CAPACITOR,CHIP CERAMIC 0.1MF
C77	1-107-826-11	s	CAPACITOR,CHIP CERAMIC 0.1MF
C78	1-107-826-11	s	CAPACITOR,CHIP CERAMIC 0.1MF
C79	1-107-826-11	s	CAPACITOR,CHIP CERAMIC 0.1MF
C80	1-107-826-11	s	CAPACITOR,CHIP CERAMIC 0.1MF
C81	1-107-826-11	s	CAPACITOR,CHIP CERAMIC 0.1MF
C82	1-107-826-11	s	CAPACITOR,CHIP CERAMIC 0.1MF
C83	1-107-826-11	s	CAPACITOR,CHIP CERAMIC 0.1MF
C84	1-107-826-11	s	CAPACITOR,CHIP CERAMIC 0.1MF
C85	1-107-826-11	s	CAPACITOR,CHIP CERAMIC 0.1MF
C86	1-107-826-11	s	CAPACITOR,CHIP CERAMIC 0.1MF
C87	1-107-826-11	s	CAPACITOR,CHIP CERAMIC 0.1MF
C88	1-107-826-11	s	CAPACITOR,CHIP CERAMIC 0.1MF
C89	1-107-826-11	s	CAPACITOR,CHIP CERAMIC 0.1MF
C90	1-107-826-11	s	CAPACITOR,CHIP CERAMIC 0.1MF
C91	1-104-851-11	s	CAPACITOR,TANTALUM 10MF/10V
IC1	8-759-567-07	s	IC CXD8763AR
IC2	8-749-017-21	s	IC SI-3025LS-TL
IC6	8-759-559-40	s	IC MB811643242A-100FN
IC7	8-759-426-26	s	IC CXD8608R
IC8	8-759-426-26	s	IC CXD8608R
IC9	8-759-426-26	s	IC CXD8608R
IC10	8-759-426-26	s	IC CXD8608R
L1	1-414-398-11	s	INDUCTOR (SMD) 10UH
L2	1-414-398-11	s	INDUCTOR (SMD) 10UH
L3	1-414-398-11	s	INDUCTOR (SMD) 10UH
L4	1-414-398-11	s	INDUCTOR (SMD) 10UH
R1	1-216-841-11	s	RESISTOR, CHIP 47K 1/16W 1608
R2	1-216-841-11	s	RESISTOR, CHIP 47K 1/16W 1608
R3	1-216-864-11	s	RESISTOR,CHIP 0 1/16W (1608)
R4	1-216-864-11	s	RESISTOR,CHIP 0 1/16W (1608)
R5	1-216-864-11	s	RESISTOR,CHIP 0 1/16W (1608)
R6	1-216-864-11	s	RESISTOR,CHIP 0 1/16W (1608)
R7	1-216-864-11	s	RESISTOR,CHIP 0 1/16W (1608)
R8	1-216-864-11	s	RESISTOR,CHIP 0 1/16W (1608)
R9	1-216-864-11	s	RESISTOR,CHIP 0 1/16W (1608)
R10	1-216-864-11	s	RESISTOR,CHIP 0 1/16W (1608)
R12	1-216-864-11	s	RESISTOR,CHIP 0 1/16W (1608)
R14	1-216-864-11	s	RESISTOR,CHIP 0 1/16W (1608)
R15	1-216-864-11	s	RESISTOR,CHIP 0 1/16W (1608)

(FU-78R BOARD (for DSR-1800/P))

Ref. No. or Q'ty	Part No.	SP	Description
R16	1-216-864-11	s	RESISTOR,CHIP 0 1/16W (1608)
R18	1-216-864-11	s	RESISTOR,CHIP 0 1/16W (1608)
R19	1-216-864-11	s	RESISTOR,CHIP 0 1/16W (1608)
R20	1-216-864-11	s	RESISTOR,CHIP 0 1/16W (1608)
R21	1-216-864-11	s	RESISTOR,CHIP 0 1/16W (1608)
R22	1-216-864-11	s	RESISTOR,CHIP 0 1/16W (1608)
R23	1-216-864-11	s	RESISTOR,CHIP 0 1/16W (1608)
R25	1-216-864-11	s	RESISTOR,CHIP 0 1/16W (1608)
R27	1-216-864-11	s	RESISTOR,CHIP 0 1/16W (1608)
R28	1-216-864-11	s	RESISTOR,CHIP 0 1/16W (1608)
R31	1-216-829-11	s	RESISTOR,CHIP 4.7K 1/16W(1608)
R32	1-216-829-11	s	RESISTOR,CHIP 4.7K 1/16W(1608)
R35	1-216-864-11	s	RESISTOR,CHIP 0 1/16W (1608)
RB1	1-239-389-11	s	RESISTOR,NETWORK 47K (1608)
RB2	1-239-389-11	s	RESISTOR,NETWORK 47K (1608)
RB3	1-239-389-11	s	RESISTOR,NETWORK 47K (1608)
RB4	1-239-389-11	s	RESISTOR,NETWORK 47K (1608)

HP-108 BOARD

Ref. No. or Q'ty	Part No.	SP	Description
1pc	A-8326-508-A	o	MOUNTED CIRCUIT BOARD, HP-108
C1	1-163-009-11	s	CAPACITOR,CERAMIC 1000PF/50V
C2	1-163-251-11	s	CAPACITOR CERAMIC 100PF/50V
C3	1-163-038-00	s	CAPACITOR, CERAMIC 0.1MF/25V
C4	1-163-251-11	s	CAPACITOR CERAMIC 100PF/50V
C5	1-163-038-00	s	CAPACITOR, CERAMIC 0.1MF/25V
C6	1-126-391-11	s	CAPACITOR ELECT 47MF/6.3V(105)
C7	1-163-038-00	s	CAPACITOR, CERAMIC 0.1MF/25V
C8	1-163-038-00	s	CAPACITOR, CERAMIC 0.1MF/25V
C9	1-163-038-00	s	CAPACITOR, CERAMIC 0.1MF/25V
C10	1-107-778-11	s	CAPACITOR,ELECT 470MF/16V CHIP
C11	1-163-038-00	s	CAPACITOR, CERAMIC 0.1MF/25V
C12	1-163-251-11	s	CAPACITOR CERAMIC 100PF/50V
C13	1-163-251-11	s	CAPACITOR CERAMIC 100PF/50V
C14	1-126-392-11	s	CAPACITOR,CHIP ELECT100MF/6.3V
C15	1-163-251-11	s	CAPACITOR CERAMIC 100PF/50V
C16	1-163-251-11	s	CAPACITOR CERAMIC 100PF/50V
C17	1-126-392-11	s	CAPACITOR,CHIP ELECT100MF/6.3V
C18	1-126-391-11	s	CAPACITOR ELECT 47MF/6.3V(105)
C19	1-163-038-00	s	CAPACITOR, CERAMIC 0.1MF/25V
C20	1-126-391-11	s	CAPACITOR ELECT 47MF/6.3V(105)
C21	1-163-038-00	s	CAPACITOR, CERAMIC 0.1MF/25V
C22	1-163-809-11	s	CAPACITOR,CHIP CERAMIC 0.047MF
C23	1-163-809-11	s	CAPACITOR,CHIP CERAMIC 0.047MF
C24	1-126-391-11	s	CAPACITOR ELECT 47MF/6.3V(105)
CN1	1-507-743-21	s	JACK,STEREO MINI
CN2	1-565-327-11	s	JACK, LARGE TYPE (6.3MM)
CN109	1-766-383-11	o	PIN, CONNECTOR (12P)(SMD)1.5MM
D1	8-719-941-23	s	DIODE DA204U
IC1	8-759-369-73	s	IC NJM4556AM
L1	1-410-377-31	s	INDUCTOR,CHIP 4.7UH (3225)
PS1	⚠ 1-576-122-21	s	CIRCUIT PROTECTOR 0.4A(IC LINK
PS2	⚠ 1-576-122-21	s	CIRCUIT PROTECTOR 0.4A(IC LINK
Q1	8-729-029-14	s	TRANSISTOR DTC144EUA-T106
Q2	8-729-028-91	s	TRANSISTOR DTA144EUA-T106
Q3	8-729-028-91	s	TRANSISTOR DTA144EUA-T106
Q4	8-729-029-14	s	TRANSISTOR DTC144EUA-T106
Q5	8-729-141-48	s	TRANSISTOR 2SB624-BV345
Q6	8-729-808-42	s	TRANSISTOR 2SD1624-T
Q7	8-729-209-07	s	TRANSISTOR 2SC4213-B
Q8	8-729-209-07	s	TRANSISTOR 2SC4213-B
R1	1-208-798-11	s	RESISTOR,CHIP 4.7K 1/10W(2012)
R2	1-216-073-00	s	RESISTOR,CHIP 10K 1/10W(2012)
R3	1-208-806-11	s	RESISTOR,CHIP 10K 1/10W (2012)
R4	1-220-221-11	s	RESISTOR CHIP 100 1/2W (4532)
R5	1-208-802-11	s	RESISTOR,CHIP 6.8K 1/10W(2012)
R6	1-208-802-11	s	RESISTOR,CHIP 6.8K 1/10W(2012)
R7	1-208-818-11	s	RESISTOR,CHIP 33K 1/10W (2012)
R8	1-208-818-11	s	RESISTOR,CHIP 33K 1/10W (2012)
R9	1-208-802-11	s	RESISTOR,CHIP 6.8K 1/10W(2012)
R10	1-208-802-11	s	RESISTOR,CHIP 6.8K 1/10W(2012)
R11	1-208-818-11	s	RESISTOR,CHIP 33K 1/10W (2012)
R12	1-208-818-11	s	RESISTOR,CHIP 33K 1/10W (2012)
R13	1-208-810-11	s	RESISTOR,CHIP 15K 1/10W (2012)
R14	1-211-966-11	s	RESISTOR,CHIP 39 1/10W (2125)

(HP-108 BOARD)

Ref. No. or Q'ty	Part No.	SP	Description
R15	1-211-964-11	s	RESISTOR,CHIP 33 1/10W (2012)
R16	1-216-097-00	s	RESISTOR CHIP 100K 1/10W(2012)
R17	1-211-966-11	s	RESISTOR,CHIP 39 1/10W (2125)
R18	1-211-964-11	s	RESISTOR,CHIP 33 1/10W (2012)
RV1	1-241-577-11	s	VAR, CARBON 20K/20K

IF-820/820A/820P BOARD (for DSR-1600/P)

*1: Lot No.081 and higher

Ref. No. or Q'ty	Part No.	SP	Description
1pc	A-8326-514-A	o	MOUNTED CIRCUIT BOARD, IF-820
2pcs	7-685-871-01	s	SCREW BVTT 3X6(EP-FE/ZN/CM2)
2pcs	4-886-821-11	s	SCREW,M3X6 CASE(SILVER)
7pcs	7-685-646-79	s	SCREW +BVTP 3X8(EP-FE/ZNBK/CM2
8pcs	7-685-862-09	s	SCREW,+BVTP 2.6X6(EP-FE/ZNBK/C
C31	1-128-416-11	s	CAPACITOR ELECT 100MF/16V(105C
C200	1-107-826-11	s	CAPACITOR,CHIP CERAMIC 0.1MF
C201	1-164-227-11	s	CAPACITOR,CERAMIC 0.022MF/25V
C202	1-162-919-11	s	CAPACITOR,CERAMIC 22PF/50V CH
C203	1-164-227-11	s	CAPACITOR,CERAMIC 0.022MF/25V
C204	1-164-227-11	s	CAPACITOR,CERAMIC 0.022MF/25V
C205	1-164-227-11	s	CAPACITOR,CERAMIC 0.022MF/25V
C206	1-107-826-11	s	CAPACITOR,CHIP CERAMIC 0.1MF
C207	1-107-826-11	s	CAPACITOR,CHIP CERAMIC 0.1MF
C208	1-162-964-11	s	CAPACITOR,CERAMIC 1000PF/50V B
C209	1-162-964-11	s	CAPACITOR,CERAMIC 1000PF/50V B
C210	1-107-826-11	s	CAPACITOR,CHIP CERAMIC 0.1MF
C211	1-107-826-11	s	CAPACITOR,CHIP CERAMIC 0.1MF
C212	1-164-227-11	s	CAPACITOR,CERAMIC 0.022MF/25V
C213	1-164-227-11	s	CAPACITOR,CERAMIC 0.022MF/25V
C214	1-164-227-11	s	CAPACITOR,CERAMIC 0.022MF/25V
C215	1-164-227-11	s	CAPACITOR,CERAMIC 0.022MF/25V
C216	1-107-826-11	s	CAPACITOR,CHIP CERAMIC 0.1MF
C217	1-162-964-11	s	CAPACITOR,CERAMIC 1000PF/50V B
C218	1-164-227-11	s	CAPACITOR,CERAMIC 0.022MF/25V
C219	1-126-392-11	s	CAPACITOR,CHIP ELECT100MF/6.3V
C220	1-107-826-11	s	CAPACITOR,CHIP CERAMIC 0.1MF
C221	1-164-227-11	s	CAPACITOR,CERAMIC 0.022MF/25V
C222	1-164-227-11	s	CAPACITOR,CERAMIC 0.022MF/25V
C223	1-164-227-11	s	CAPACITOR,CERAMIC 0.022MF/25V
C224	1-164-227-11	s	CAPACITOR,CERAMIC 0.022MF/25V
C225	1-126-391-11	s	CAPACITOR ELECT 47MF/6.3V(105)
C226	1-126-391-11	s	CAPACITOR ELECT 47MF/6.3V(105)
C227	1-164-227-11	s	CAPACITOR,CERAMIC 0.022MF/25V
C228	1-164-227-11	s	CAPACITOR,CERAMIC 0.022MF/25V
C229	1-164-227-11	s	CAPACITOR,CERAMIC 0.022MF/25V
C230	1-164-227-11	s	CAPACITOR,CERAMIC 0.022MF/25V
C231	1-164-227-11	s	CAPACITOR,CERAMIC 0.022MF/25V
C232	1-164-227-11	s	CAPACITOR,CERAMIC 0.022MF/25V
C233	1-126-392-11	s	CAPACITOR,CHIP ELECT100MF/6.3V
C234	1-126-392-11	s	CAPACITOR,CHIP ELECT100MF/6.3V
C235	1-107-826-11	s	CAPACITOR,CHIP CERAMIC 0.1MF
C236	1-164-227-11	s	CAPACITOR,CERAMIC 0.022MF/25V
C237	1-126-392-11	s	CAPACITOR,CHIP ELECT100MF/6.3V
C238	1-126-391-11	s	CAPACITOR ELECT 47MF/6.3V(105)
C239	1-164-227-11	s	CAPACITOR,CERAMIC 0.022MF/25V
C240	1-107-826-11	s	CAPACITOR,CHIP CERAMIC 0.1MF
C241	1-164-227-11	s	CAPACITOR,CERAMIC 0.022MF/25V
C242	1-164-227-11	s	CAPACITOR,CERAMIC 0.022MF/25V
C243	1-164-227-11	s	CAPACITOR,CERAMIC 0.022MF/25V
C244	1-126-392-11	s	CAPACITOR,CHIP ELECT100MF/6.3V
C245	1-164-227-11	s	CAPACITOR,CERAMIC 0.022MF/25V
C246	1-164-227-11	s	CAPACITOR,CERAMIC 0.022MF/25V
C247	1-164-227-11	s	CAPACITOR,CERAMIC 0.022MF/25V
C248	1-164-227-11	s	CAPACITOR,CERAMIC 0.022MF/25V
C249	1-135-210-11	s	CAPACITOR,TANTALUM 4.7MF/10V
C250	1-164-227-11	s	CAPACITOR,CERAMIC 0.022MF/25V
C251	1-126-392-11	s	CAPACITOR,CHIP ELECT100MF/6.3V

(IF-820/820A/820P BOARD (for DSR-1600/P))

Ref. No. or Q'ty	Part No.	SP	Description
C252	1-126-396-11	s	CAPACITOR,ELECT 47MF/16V(CHIP)
C253	1-164-227-11	s	CAPACITOR,CERAMIC 0.022MF/25V
C254	1-164-227-11	s	CAPACITOR,CERAMIC 0.022MF/25V
C255	1-162-917-11	s	CAPACITOR,CERAMIC 15PF/50V CH
C256	1-162-923-11	s	CAPACITOR,CERAMIC 47PF/50V CH
C257	1-162-921-11	s	CAPACITOR,CERAMIC 33PF/50V CH
C258	1-162-919-11	s	CAPACITOR,CERAMIC 22PF/50V CH [for DSR-1600(J), (UC)]
C258	1-162-920-11	s	CAPACITOR,CERAMIC 27PF/50V CH [for DSR-1600P]
C259	1-162-908-11	s	CAPACITOR,CERAMIC 3PF/50V 1608
C261	1-164-227-11	s	CAPACITOR,CERAMIC 0.022MF/25V
C262	1-164-227-11	s	CAPACITOR,CERAMIC 0.022MF/25V
C263	1-162-917-11	s	CAPACITOR,CERAMIC 15PF/50V CH
C264	1-164-227-11	s	CAPACITOR,CERAMIC 0.022MF/25V
C265	1-162-923-11	s	CAPACITOR,CERAMIC 47PF/50V CH
C266	1-162-921-11	s	CAPACITOR,CERAMIC 33PF/50V CH
C267	1-162-919-11	s	CAPACITOR,CERAMIC 22PF/50V CH [for DSR-1600(J), (UC)]
C267	1-162-920-11	s	CAPACITOR,CERAMIC 27PF/50V CH [for DSR-1600P]
C268	1-162-908-11	s	CAPACITOR,CERAMIC 3PF/50V 1608
C269	1-107-826-11	s	CAPACITOR,CHIP CERAMIC 0.1MF
C270	1-107-826-11	s	CAPACITOR,CHIP CERAMIC 0.1MF
C271	1-107-826-11	s	CAPACITOR,CHIP CERAMIC 0.1MF
C273	1-107-826-11	s	CAPACITOR,CHIP CERAMIC 0.1MF
C274	1-126-392-11	s	CAPACITOR,CHIP ELECT100MF/6.3V
C276	1-107-826-11	s	CAPACITOR,CHIP CERAMIC 0.1MF
C277	1-126-392-11	s	CAPACITOR,CHIP ELECT100MF/6.3V
C278	1-164-227-11	s	CAPACITOR,CERAMIC 0.022MF/25V
C279	1-164-227-11	s	CAPACITOR,CERAMIC 0.022MF/25V
C300	1-126-392-11	s	CAPACITOR,CHIP ELECT100MF/6.3V
C301	1-126-392-11	s	CAPACITOR,CHIP ELECT100MF/6.3V
C302	1-162-915-11	s	CAPACITOR,CERAMIC 10PF/50V CH
C303	1-164-227-11	s	CAPACITOR,CERAMIC 0.022MF/25V
C304	1-164-227-11	s	CAPACITOR,CERAMIC 0.022MF/25V
C305	1-164-227-11	s	CAPACITOR,CERAMIC 0.022MF/25V
C306	1-164-227-11	s	CAPACITOR,CERAMIC 0.022MF/25V
C307	1-164-227-11	s	CAPACITOR,CERAMIC 0.022MF/25V
C308	1-162-927-11	s	CAPACITOR,CERAMIC 100PF/50V CH
C309	1-164-227-11	s	CAPACITOR,CERAMIC 0.022MF/25V
C310	1-164-227-11	s	CAPACITOR,CERAMIC 0.022MF/25V
C311	1-135-177-21	s	CAPACITOR TANTALUM 1MF/25V
C312	1-135-177-21	s	CAPACITOR TANTALUM 1MF/25V
C313	1-164-383-11	s	CAPACITOR,CERAMIC 110PF/50V CH [for DSR-1600(J), (UC)]
C313	1-164-217-11	s	CAPACITOR,CERAMIC 150PF/50V CH [for DSR-1600P]
C314	1-135-177-21	s	CAPACITOR TANTALUM 1MF/25V
C315	1-135-177-21	s	CAPACITOR TANTALUM 1MF/25V
C316	1-164-227-11	s	CAPACITOR,CERAMIC 0.022MF/25V
C317	1-164-227-11	s	CAPACITOR,CERAMIC 0.022MF/25V
C318	1-126-392-11	s	CAPACITOR,CHIP ELECT100MF/6.3V
C319	1-164-227-11	s	CAPACITOR,CERAMIC 0.022MF/25V
C320	1-164-227-11	s	CAPACITOR,CERAMIC 0.022MF/25V
C321	1-164-227-11	s	CAPACITOR,CERAMIC 0.022MF/25V
C322	1-165-176-11	s	CAPACITOR,CERAMIC 47000PF/16V
C323	1-165-176-11	s	CAPACITOR,CERAMIC 47000PF/16V
C324	1-164-227-11	s	CAPACITOR,CERAMIC 0.022MF/25V
C325	1-162-917-11	s	CAPACITOR,CERAMIC 15PF/50V CH

(IF-820/820A/820P BOARD (for DSR-1600/P))

Ref. No. or Q'ty	Part No.	SP	Description
C326	1-162-915-11	s	CAPACITOR,CERAMIC 10PF/50V CH
C327	1-164-230-11	s	CAPACITOR,CERAMIC 220PF/50V
C328	1-164-227-11	s	CAPACITOR,CERAMIC 0.022MF/25V
C329	1-126-392-11	s	CAPACITOR,CHIP ELECT100MF/6.3V
C330	1-164-227-11	s	CAPACITOR,CERAMIC 0.022MF/25V
C331	1-164-227-11	s	CAPACITOR,CERAMIC 0.022MF/25V
C332	1-164-227-11	s	CAPACITOR,CERAMIC 0.022MF/25V
C333	1-126-396-11	s	CAPACITOR,ELECT 47MF/16V(CHIP)
C334	1-164-227-11	s	CAPACITOR,CERAMIC 0.022MF/25V
C335	1-164-227-11	s	CAPACITOR,CERAMIC 0.022MF/25V
C336	1-164-227-11	s	CAPACITOR,CERAMIC 0.022MF/25V
C337	1-164-227-11	s	CAPACITOR,CERAMIC 0.022MF/25V
C338	1-164-227-11	s	CAPACITOR,CERAMIC 0.022MF/25V
C339	1-164-227-11	s	CAPACITOR,CERAMIC 0.022MF/25V
C340	1-162-923-11	s	CAPACITOR,CERAMIC 47PF/50V CH
C341	1-162-920-11	s	CAPACITOR,CERAMIC 27PF/50V CH [for DSR-1600(J), (UC)]
C341	1-162-921-11	s	CAPACITOR,CERAMIC 33PF/50V CH [for DSR-1600P]
C342	1-162-920-11	s	CAPACITOR,CERAMIC 27PF/50V CH [for DSR-1600(J), (UC)]
C342	1-162-921-11	s	CAPACITOR,CERAMIC 33PF/50V CH [for DSR-1600P]
C343	1-162-915-11	s	CAPACITOR,CERAMIC 10PF/50V CH
C344	1-162-924-11	s	CAPACITOR,CERAMIC 56PF/50V CH [for DSR-1600(J), (UC)]
C344	1-162-925-11	s	CAPACITOR,CERAMIC 68PF/50V CH [for DSR-1600P]
C345	1-162-924-11	s	CAPACITOR,CERAMIC 56PF/50V CH [for DSR-1600(J), (UC)]
C345	1-162-925-11	s	CAPACITOR,CERAMIC 68PF/50V CH [for DSR-1600P]
C346	1-162-920-11	s	CAPACITOR,CERAMIC 27PF/50V CH [for DSR-1600(J), (UC)]
C346	1-162-921-11	s	CAPACITOR,CERAMIC 33PF/50V CH [for DSR-1600P]
C347	1-162-920-11	s	CAPACITOR,CERAMIC 27PF/50V CH [for DSR-1600(J), (UC)]
C347	1-162-921-11	s	CAPACITOR,CERAMIC 33PF/50V CH [for DSR-1600P]
C348	1-164-227-11	s	CAPACITOR,CERAMIC 0.022MF/25V
C349	1-164-227-11	s	CAPACITOR,CERAMIC 0.022MF/25V
C350	1-164-227-11	s	CAPACITOR,CERAMIC 0.022MF/25V
C351	1-164-227-11	s	CAPACITOR,CERAMIC 0.022MF/25V
C352	1-162-912-11	s	CAPACITOR,CERAMIC 7PF/50V 1608 [for DSR-1600(J), (UC)]
C352	1-162-909-11	s	CAPACITOR,CERAMIC 4PF/50V CH [for DSR-1600P]
C353	1-162-915-11	s	CAPACITOR,CERAMIC 10PF/50V CH
C354	1-107-826-11	s	CAPACITOR,CHIP CERAMIC 0.1MF
C355	1-164-227-11	s	CAPACITOR,CERAMIC 0.022MF/25V
C356	1-164-227-11	s	CAPACITOR,CERAMIC 0.022MF/25V
C357	1-164-227-11	s	CAPACITOR,CERAMIC 0.022MF/25V
C358	1-164-227-11	s	CAPACITOR,CERAMIC 0.022MF/25V
C400	1-126-392-11	s	CAPACITOR,CHIP ELECT100MF/6.3V
C401	1-164-227-11	s	CAPACITOR,CERAMIC 0.022MF/25V
C402	1-126-392-11	s	CAPACITOR,CHIP ELECT100MF/6.3V
C403	1-164-227-11	s	CAPACITOR,CERAMIC 0.022MF/25V
C404	1-164-227-11	s	CAPACITOR,CERAMIC 0.022MF/25V
C405	1-162-924-11	s	CAPACITOR,CERAMIC 56PF/50V CH
C406	1-164-227-11	s	CAPACITOR,CERAMIC 0.022MF/25V

(IF-820/820A/820P BOARD (for DSR-1600/P))

Ref. No. or Q'ty	Part No.	SP	Description
C407	1-164-227-11	s	CAPACITOR,CERAMIC 0.022MF/25V
C408	1-164-227-11	s	CAPACITOR,CERAMIC 0.022MF/25V
C409	1-164-227-11	s	CAPACITOR,CERAMIC 0.022MF/25V
C410	1-164-227-11	s	CAPACITOR,CERAMIC 0.022MF/25V
C411	1-164-227-11	s	CAPACITOR,CERAMIC 0.022MF/25V
C412	1-164-227-11	s	CAPACITOR,CERAMIC 0.022MF/25V
C413	1-111-253-11	s	CAPACITOR TANTALUM 100MF/6.3V
C414	1-162-915-11	s	CAPACITOR,CERAMIC 10PF/50V CH
C415	1-126-396-11	s	CAPACITOR,ELECT 47MF/16V(CHIP)
C416	1-164-227-11	s	CAPACITOR,CERAMIC 0.022MF/25V
C417	1-164-227-11	s	CAPACITOR,CERAMIC 0.022MF/25V
C418	1-162-908-11	s	CAPACITOR,CERAMIC 3PF/50V 1608
C419	1-164-227-11	s	CAPACITOR,CERAMIC 0.022MF/25V
C420	1-126-392-11	s	CAPACITOR,CHIP ELECT100MF/6.3V
C421	1-164-227-11	s	CAPACITOR,CERAMIC 0.022MF/25V
C422	1-164-227-11	s	CAPACITOR,CERAMIC 0.022MF/25V
C423	1-164-227-11	s	CAPACITOR,CERAMIC 0.022MF/25V
C424	1-164-227-11	s	CAPACITOR,CERAMIC 0.022MF/25V
C425	1-164-227-11	s	CAPACITOR,CERAMIC 0.022MF/25V
C426	1-164-227-11	s	CAPACITOR,CERAMIC 0.022MF/25V
C427	1-164-227-11	s	CAPACITOR,CERAMIC 0.022MF/25V
C428	1-162-917-11	s	CAPACITOR,CERAMIC 15PF/50V CH
C429	1-164-384-11	s	CAPACITOR CERAMIC 130PF/50V CH [for DSR-1600(J), (UC)]
C429	1-164-230-11	s	CAPACITOR,CERAMIC 220PF/50V [for DSR-1600P]
C430	1-104-851-11	s	CAPACITOR,TANTALUM 10MF/10V
C431	1-104-851-11	s	CAPACITOR,TANTALUM 10MF/10V
C432	1-165-176-11	s	CAPACITOR,CERAMIC 47000PF/16V
C433	1-164-227-11	s	CAPACITOR,CERAMIC 0.022MF/25V
C434	1-162-915-11	s	CAPACITOR,CERAMIC 10PF/50V CH
C435	1-164-227-11	s	CAPACITOR,CERAMIC 0.022MF/25V
C436	1-162-923-11	s	CAPACITOR,CERAMIC 47PF/50V CH [for DSR-1600(J), (UC)]
C436	1-162-920-11	s	CAPACITOR,CERAMIC 27PF/50V CH [for DSR-1600P]
C437	1-162-915-11	s	CAPACITOR,CERAMIC 10PF/50V CH
C438	1-164-227-11	s	CAPACITOR,CERAMIC 0.022MF/25V
C439	1-162-923-11	s	CAPACITOR,CERAMIC 47PF/50V CH
C440	1-162-910-11	s	CAPACITOR,CERAMIC 5PF/50V 1608
C441	1-164-227-11	s	CAPACITOR,CERAMIC 0.022MF/25V
C442	1-164-227-11	s	CAPACITOR,CERAMIC 0.022MF/25V
C443	1-164-217-11	s	CAPACITOR,CERAMIC 150PF/50V CH
C444	1-162-908-11	s	CAPACITOR,CERAMIC 3PF/50V 1608
C445	1-162-908-11	s	CAPACITOR,CERAMIC 3PF/50V 1608
C446	1-162-908-11	s	CAPACITOR,CERAMIC 3PF/50V 1608
C532	1-162-921-11	s	CAPACITOR,CERAMIC 33PF/50V CH
C533	1-126-396-11	s	CAPACITOR,ELECT 47MF/16V(CHIP)
C534	1-162-919-11	s	CAPACITOR,CERAMIC 22PF/50V CH
C535	1-164-217-11	s	CAPACITOR,CERAMIC 150PF/50V CH [for DSR-1600(J), (UC)]
C535	1-164-230-11	s	CAPACITOR,CERAMIC 220PF/50V [for DSR-1600P]
C536	1-126-396-11	s	CAPACITOR,ELECT 47MF/16V(CHIP)
C537	1-162-921-11	s	CAPACITOR,CERAMIC 33PF/50V CH
C538	1-164-230-11	s	CAPACITOR,CERAMIC 220PF/50V
C539	1-164-227-11	s	CAPACITOR,CERAMIC 0.022MF/25V
C540	1-107-826-11	s	CAPACITOR,CHIP CERAMIC 0.1MF
C541	1-126-392-11	s	CAPACITOR,CHIP ELECT100MF/6.3V
C542	1-107-826-11	s	CAPACITOR,CHIP CERAMIC 0.1MF

(IF-820/820A/820P BOARD (for DSR-1600/P))

Ref. No. or Q'ty	Part No.	SP	Description
C543	1-162-921-11	s	CAPACITOR,CERAMIC 33PF/50V CH [for DSR-1600(J), (UC)]
C543	1-162-919-11	s	CAPACITOR,CERAMIC 22PF/50V CH [for DSR-1600P]
C544	1-164-227-11	s	CAPACITOR,CERAMIC 0.022MF/25V
C545	1-126-392-11	s	CAPACITOR,CHIP ELECT100MF/6.3V
C546	1-165-176-11	s	CAPACITOR,CERAMIC 47000PF/16V
C547	1-128-416-11	s	CAPACITOR ELECT 100MF/16V(105C
C550	1-165-176-11	s	CAPACITOR,CERAMIC 47000PF/16V
C600	1-162-927-11	s	CAPACITOR,CERAMIC 100PF/50V CH
C601	1-162-927-11	s	CAPACITOR,CERAMIC 100PF/50V CH
C602	1-162-927-11	s	CAPACITOR,CERAMIC 100PF/50V CH
C603	1-162-927-11	s	CAPACITOR,CERAMIC 100PF/50V CH
C604	1-107-826-11	s	CAPACITOR,CHIP CERAMIC 0.1MF
C605	1-107-826-11	s	CAPACITOR,CHIP CERAMIC 0.1MF
C606	1-107-826-11	s	CAPACITOR,CHIP CERAMIC 0.1MF
C607	1-107-826-11	s	CAPACITOR,CHIP CERAMIC 0.1MF
C608	1-107-826-11	s	CAPACITOR,CHIP CERAMIC 0.1MF
C609	1-107-826-11	s	CAPACITOR,CHIP CERAMIC 0.1MF
C610	1-162-927-11	s	CAPACITOR,CERAMIC 100PF/50V CH
C611	1-162-927-11	s	CAPACITOR,CERAMIC 100PF/50V CH
C612	1-162-927-11	s	CAPACITOR,CERAMIC 100PF/50V CH
C613	1-162-927-11	s	CAPACITOR,CERAMIC 100PF/50V CH
C614	1-162-927-11	s	CAPACITOR,CERAMIC 100PF/50V CH
C615	1-107-826-11	s	CAPACITOR,CHIP CERAMIC 0.1MF
C616	1-107-826-11	s	CAPACITOR,CHIP CERAMIC 0.1MF
C617	1-107-826-11	s	CAPACITOR,CHIP CERAMIC 0.1MF
C618	1-162-970-11	s	CAPACITOR CERAMIC 0.01MF/25V B
C619	1-164-227-11	s	CAPACITOR,CERAMIC 0.022MF/25V
C620	1-164-227-11	s	CAPACITOR,CERAMIC 0.022MF/25V
C621	1-126-396-11	s	CAPACITOR,ELECT 47MF/16V(CHIP)
C622	1-164-227-11	s	CAPACITOR,CERAMIC 0.022MF/25V
C623	1-164-227-11	s	CAPACITOR,CERAMIC 0.022MF/25V
C624	1-107-826-11	s	CAPACITOR,CHIP CERAMIC 0.1MF
C625	1-107-826-11	s	CAPACITOR,CHIP CERAMIC 0.1MF
C626	1-107-826-11	s	CAPACITOR,CHIP CERAMIC 0.1MF
C627	1-107-826-11	s	CAPACITOR,CHIP CERAMIC 0.1MF
C628	1-107-826-11	s	CAPACITOR,CHIP CERAMIC 0.1MF
C629	1-164-217-11	s	CAPACITOR,CERAMIC 150PF/50V CH
C630	1-164-227-11	s	CAPACITOR,CERAMIC 0.022MF/25V
C631	1-126-392-11	s	CAPACITOR,CHIP ELECT100MF/6.3V
C633	1-162-970-11	s	CAPACITOR CERAMIC 0.01MF/25V B
C634	1-107-826-11	s	CAPACITOR,CHIP CERAMIC 0.1MF
C635	1-126-392-11	s	CAPACITOR,CHIP ELECT100MF/6.3V
C636	1-126-396-11	s	CAPACITOR,ELECT 47MF/16V(CHIP)
C637	1-126-396-11	s	CAPACITOR,ELECT 47MF/16V(CHIP)
C638	1-165-176-11	s	CAPACITOR,CERAMIC 47000PF/16V
C639	1-165-176-11	s	CAPACITOR,CERAMIC 47000PF/16V
C700	1-126-392-11	s	CAPACITOR,CHIP ELECT100MF/6.3V
C701	1-107-826-11	s	CAPACITOR,CHIP CERAMIC 0.1MF
C702	1-107-826-11	s	CAPACITOR,CHIP CERAMIC 0.1MF
C704	1-107-826-11	s	CAPACITOR,CHIP CERAMIC 0.1MF
C706	1-126-391-11	s	CAPACITOR ELECT 47MF/6.3V(105)
C707	1-164-227-11	s	CAPACITOR,CERAMIC 0.022MF/25V
C708	1-164-227-11	s	CAPACITOR,CERAMIC 0.022MF/25V
C709	1-126-392-11	s	CAPACITOR,CHIP ELECT100MF/6.3V
C710	1-126-392-11	s	CAPACITOR,CHIP ELECT100MF/6.3V
C711	1-164-227-11	s	CAPACITOR,CERAMIC 0.022MF/25V

(IF-820/820A/820P BOARD (for DSR-1600/P))

Ref. No. or Q'ty	Part No.	SP	Description
C712	1-162-920-11	s	CAPACITOR,CERAMIC 27PF/50V CH [for DSR-1600(J), (UC)]
C712	1-162-921-11	s	CAPACITOR,CERAMIC 33PF/50V CH [for DSR-1600P]
C713	1-162-924-11	s	CAPACITOR,CERAMIC 56PF/50V CH [for DSR-1600(J), (UC)]
C713	1-162-925-11	s	CAPACITOR,CERAMIC 68PF/50V CH [for DSR-1600P]
C714	1-162-920-11	s	CAPACITOR,CERAMIC 27PF/50V CH [for DSR-1600(J), (UC)]
C714	1-162-921-11	s	CAPACITOR,CERAMIC 33PF/50V CH [for DSR-1600P]
C715	1-164-227-11	s	CAPACITOR,CERAMIC 0.022MF/25V
C716	1-164-227-11	s	CAPACITOR,CERAMIC 0.022MF/25V
C717	1-164-227-11	s	CAPACITOR,CERAMIC 0.022MF/25V
C718	1-164-227-11	s	CAPACITOR,CERAMIC 0.022MF/25V
C719	1-164-227-11	s	CAPACITOR,CERAMIC 0.022MF/25V
C720	1-162-964-11	s	CAPACITOR,CERAMIC 1000PF/50V B
C721	1-135-177-21	s	CAPACITOR TANTALUM 1MF/25V
C722	1-162-970-11	s	CAPACITOR CERAMIC 0.01MF/25V B
C723	1-135-210-11	s	CAPACITOR,TANTALUM 4.7MF/10V
C724	1-162-970-11	s	CAPACITOR CERAMIC 0.01MF/25V B
C725	1-164-227-11	s	CAPACITOR,CERAMIC 0.022MF/25V
C726	1-107-826-11	s	CAPACITOR,CHIP CERAMIC 0.1MF
C727	1-126-392-11	s	CAPACITOR,CHIP ELECT100MF/6.3V
C728	1-164-227-11	s	CAPACITOR,CERAMIC 0.022MF/25V
C729	1-164-227-11	s	CAPACITOR,CERAMIC 0.022MF/25V
C730	1-126-392-11	s	CAPACITOR,CHIP ELECT100MF/6.3V
C731	1-164-227-11	s	CAPACITOR,CERAMIC 0.022MF/25V
C732	1-164-227-11	s	CAPACITOR,CERAMIC 0.022MF/25V
C733	1-126-392-11	s	CAPACITOR,CHIP ELECT100MF/6.3V
C734	1-107-826-11	s	CAPACITOR,CHIP CERAMIC 0.1MF
C735	1-164-227-11	s	CAPACITOR,CERAMIC 0.022MF/25V
C736	1-164-227-11	s	CAPACITOR,CERAMIC 0.022MF/25V
C737	1-164-227-11	s	CAPACITOR,CERAMIC 0.022MF/25V
C738	1-164-227-11	s	CAPACITOR,CERAMIC 0.022MF/25V
C739	1-164-227-11	s	CAPACITOR,CERAMIC 0.022MF/25V
C740	1-107-826-11	s	CAPACITOR,CHIP CERAMIC 0.1MF
C749	1-107-826-11	s	CAPACITOR,CHIP CERAMIC 0.1MF
C750	1-135-177-21	s	CAPACITOR TANTALUM 1MF/25V
C751	1-107-826-11	s	CAPACITOR,CHIP CERAMIC 0.1MF
C752	1-107-826-11	s	CAPACITOR,CHIP CERAMIC 0.1MF
C753	1-107-826-11	s	CAPACITOR,CHIP CERAMIC 0.1MF
C754	1-107-826-11	s	CAPACITOR,CHIP CERAMIC 0.1MF
C755	1-107-826-11	s	CAPACITOR,CHIP CERAMIC 0.1MF
C756	1-107-826-11	s	CAPACITOR,CHIP CERAMIC 0.1MF
C757	1-107-826-11	s	CAPACITOR,CHIP CERAMIC 0.1MF
C758	1-107-826-11	s	CAPACITOR,CHIP CERAMIC 0.1MF
C759	1-107-826-11	s	CAPACITOR,CHIP CERAMIC 0.1MF
C760	1-107-826-11	s	CAPACITOR,CHIP CERAMIC 0.1MF
C761	1-107-826-11	s	CAPACITOR,CHIP CERAMIC 0.1MF
C762	1-126-396-11	s	CAPACITOR,ELECT 47MF/16V(CHIP)
C764	1-107-826-11	s	CAPACITOR,CHIP CERAMIC 0.1MF
C765	1-107-826-11	s	CAPACITOR,CHIP CERAMIC 0.1MF
C766	1-107-826-11	s	CAPACITOR,CHIP CERAMIC 0.1MF
C767	1-107-826-11	s	CAPACITOR,CHIP CERAMIC 0.1MF
C802	1-107-826-11	s	CAPACITOR,CHIP CERAMIC 0.1MF
C803	1-107-826-11	s	CAPACITOR,CHIP CERAMIC 0.1MF
C804	1-126-392-11	s	CAPACITOR,CHIP ELECT100MF/6.3V
C805	1-164-227-11	s	CAPACITOR,CERAMIC 0.022MF/25V

(IF-820/820A/820P BOARD (for DSR-1600/P))

Ref. No. or Q'ty	Part No.	SP	Description
C806	1-164-227-11	s	CAPACITOR,CERAMIC 0.022MF/25V
C807	1-164-227-11	s	CAPACITOR,CERAMIC 0.022MF/25V
C808	1-164-227-11	s	CAPACITOR,CERAMIC 0.022MF/25V
C809	1-164-227-11	s	CAPACITOR,CERAMIC 0.022MF/25V
C810	1-164-227-11	s	CAPACITOR,CERAMIC 0.022MF/25V
C811	1-164-227-11	s	CAPACITOR,CERAMIC 0.022MF/25V
C812	1-164-227-11	s	CAPACITOR,CERAMIC 0.022MF/25V
C814	1-164-227-11	s	CAPACITOR,CERAMIC 0.022MF/25V
C815	1-164-227-11	s	CAPACITOR,CERAMIC 0.022MF/25V
C817	1-126-392-11	s	CAPACITOR,CHIP ELECT100MF/6.3V
C818	1-126-392-11	s	CAPACITOR,CHIP ELECT100MF/6.3V
C820	1-164-227-11	s	CAPACITOR,CERAMIC 0.022MF/25V
C821	1-164-227-11	s	CAPACITOR,CERAMIC 0.022MF/25V
C822	1-107-826-11	s	CAPACITOR,CHIP CERAMIC 0.1MF
C900	1-126-392-11	s	CAPACITOR,CHIP ELECT100MF/6.3V
C901	1-126-396-11	s	CAPACITOR,ELECT 47MF/16V(CHIP)
C902	1-126-396-11	s	CAPACITOR,ELECT 47MF/16V(CHIP)
C903	1-126-392-11	s	CAPACITOR,CHIP ELECT100MF/6.3V
C904	1-126-396-11	s	CAPACITOR,ELECT 47MF/16V(CHIP)
C905	1-164-227-11	s	CAPACITOR,CERAMIC 0.022MF/25V
C906	1-164-227-11	s	CAPACITOR,CERAMIC 0.022MF/25V
C907	1-164-227-11	s	CAPACITOR,CERAMIC 0.022MF/25V
C908	1-164-227-11	s	CAPACITOR,CERAMIC 0.022MF/25V
C909	1-164-227-11	s	CAPACITOR,CERAMIC 0.022MF/25V
C910	1-164-227-11	s	CAPACITOR,CERAMIC 0.022MF/25V
C911	1-126-392-11	s	CAPACITOR,CHIP ELECT100MF/6.3V
C912	1-164-227-11	s	CAPACITOR,CERAMIC 0.022MF/25V
C913	1-126-392-11	s	CAPACITOR,CHIP ELECT100MF/6.3V
C914	1-164-227-11	s	CAPACITOR,CERAMIC 0.022MF/25V
C915	1-164-227-11	s	CAPACITOR,CERAMIC 0.022MF/25V
C916	1-126-392-11	s	CAPACITOR,CHIP ELECT100MF/6.3V
C917	1-126-392-11	s	CAPACITOR,CHIP ELECT100MF/6.3V
C918	1-164-227-11	s	CAPACITOR,CERAMIC 0.022MF/25V
C919	1-164-227-11	s	CAPACITOR,CERAMIC 0.022MF/25V
C920	1-126-396-11	s	CAPACITOR,ELECT 47MF/16V(CHIP)
C921	1-126-396-11	s	CAPACITOR,ELECT 47MF/16V(CHIP)
C922	1-164-227-11	s	CAPACITOR,CERAMIC 0.022MF/25V
C923	1-164-227-11	s	CAPACITOR,CERAMIC 0.022MF/25V
C924	1-126-394-11	s	CAPACITOR,ELECT 10MF/16V(CHIP)
C925	1-164-227-11	s	CAPACITOR,CERAMIC 0.022MF/25V
C926	1-126-394-11	s	CAPACITOR,ELECT 10MF/16V(CHIP)
C927	1-104-852-11	s	CAPACITOR,TANTALUM 22MF/10V
C928	1-164-227-11	s	CAPACITOR,CERAMIC 0.022MF/25V
C929	1-164-227-11	s	CAPACITOR,CERAMIC 0.022MF/25V
C930	1-164-227-11	s	CAPACITOR,CERAMIC 0.022MF/25V
C931	1-128-416-11	s	CAPACITOR ELECT 100MF/16V(105C
C932	1-128-416-11	s	CAPACITOR ELECT 100MF/16V(105C
C933	1-128-416-11	s	CAPACITOR ELECT 100MF/16V(105C
C934	1-164-156-11	s	CAPACITOR,CERAMIC 0.1MF/25V F
C935	1-164-156-11	s	CAPACITOR,CERAMIC 0.1MF/25V F
C936	1-162-970-11	s	CAPACITOR CERAMIC 0.01MF/25V B
C937	1-126-395-11	s	CAPACITOR,ELECT 22MF/16V(CHIP)
C938	1-126-395-11	s	CAPACITOR,ELECT 22MF/16V(CHIP)
C939	1-104-852-11	s	CAPACITOR,TANTALUM 22MF/10V
C1001	1-162-923-11	s	CAPACITOR,CERAMIC 47PF/50V CH
C1002	1-128-416-11	s	CAPACITOR ELECT 100MF/16V(105C
C1004	1-126-395-11	s	CAPACITOR,ELECT 22MF/16V(CHIP)
C1005	1-128-416-11	s	CAPACITOR ELECT 100MF/16V(105C
C1006	1-104-851-11	s	CAPACITOR,TANTALUM 10MF/10V

(IF-820/820A/820P BOARD (for DSR-1600/P))

Ref. No. or Q'ty	Part No.	SP	Description
C1007	1-164-156-11	s	CAPACITOR,CERAMIC 0.1MF/25V F
C1008	1-164-156-11	s	CAPACITOR,CERAMIC 0.1MF/25V F
C1009	1-104-851-11	s	CAPACITOR,TANTALUM 10MF/10V
C1010	1-164-156-11	s	CAPACITOR,CERAMIC 0.1MF/25V F
C1011	1-126-394-11	s	CAPACITOR,ELECT 10MF/16V(CHIP)
C1012	1-126-394-11	s	CAPACITOR,ELECT 10MF/16V(CHIP)
C1013	1-126-394-11	s	CAPACITOR,ELECT 10MF/16V(CHIP)
C1014	1-126-394-11	s	CAPACITOR,ELECT 10MF/16V(CHIP)
C1015	1-162-927-11	s	CAPACITOR,CERAMIC 100PF/50V CH
C1016	1-162-927-11	s	CAPACITOR,CERAMIC 100PF/50V CH
C1017	1-162-927-11	s	CAPACITOR,CERAMIC 100PF/50V CH
C1018	1-162-927-11	s	CAPACITOR,CERAMIC 100PF/50V CH
C1019	1-164-227-11	s	CAPACITOR,CERAMIC 0.022MF/25V
C1020	1-164-227-11	s	CAPACITOR,CERAMIC 0.022MF/25V
C1021	1-165-176-11	s	CAPACITOR,CERAMIC 47000PF/16V
C1101	1-104-851-11	s	CAPACITOR,TANTALUM 10MF/10V
C1102	1-164-156-11	s	CAPACITOR,CERAMIC 0.1MF/25V F
C1103	1-164-156-11	s	CAPACITOR,CERAMIC 0.1MF/25V F
C1104	1-104-851-11	s	CAPACITOR,TANTALUM 10MF/10V
C1105	1-164-156-11	s	CAPACITOR,CERAMIC 0.1MF/25V F
C1106	1-126-394-11	s	CAPACITOR,ELECT 10MF/16V(CHIP)
C1107	1-126-394-11	s	CAPACITOR,ELECT 10MF/16V(CHIP)
C1108	1-162-927-11	s	CAPACITOR,CERAMIC 100PF/50V CH
C1109	1-162-927-11	s	CAPACITOR,CERAMIC 100PF/50V CH
C1110	1-164-227-11	s	CAPACITOR,CERAMIC 0.022MF/25V
C1111	1-164-227-11	s	CAPACITOR,CERAMIC 0.022MF/25V
C1112	1-126-395-11	s	CAPACITOR,ELECT 22MF/16V(CHIP)
C1113	1-162-927-11	s	CAPACITOR,CERAMIC 100PF/50V CH
C1114	1-164-156-11	s	CAPACITOR,CERAMIC 0.1MF/25V F
C1115	1-164-156-11	s	CAPACITOR,CERAMIC 0.1MF/25V F
C1116	1-164-227-11	s	CAPACITOR,CERAMIC 0.022MF/25V
C1117	1-164-227-11	s	CAPACITOR,CERAMIC 0.022MF/25V
C1118	1-164-227-11	s	CAPACITOR,CERAMIC 0.022MF/25V
C1151	1-164-156-11	s	CAPACITOR,CERAMIC 0.1MF/25V F
C1152	1-164-156-11	s	CAPACITOR,CERAMIC 0.1MF/25V F
C1153	1-162-927-11	s	CAPACITOR,CERAMIC 100PF/50V CH
C1154	1-126-395-11	s	CAPACITOR,ELECT 22MF/16V(CHIP)
C1155	1-162-923-11	s	CAPACITOR,CERAMIC 47PF/50V CH
C1156	1-162-923-11	s	CAPACITOR,CERAMIC 47PF/50V CH
C1157	1-162-927-11	s	CAPACITOR,CERAMIC 100PF/50V CH
C1158	1-128-398-11	s	CAP, ELECT 220MF/16V (CHIP)
C1159	1-128-398-11	s	CAP, ELECT 220MF/16V (CHIP)
C1206	1-126-394-11	s	CAPACITOR,ELECT 10MF/16V(CHIP)
C1207	1-126-394-11	s	CAPACITOR,ELECT 10MF/16V(CHIP)
C1208	1-162-927-11	s	CAPACITOR,CERAMIC 100PF/50V CH
C1209	1-162-927-11	s	CAPACITOR,CERAMIC 100PF/50V CH
C1210	1-164-227-11	s	CAPACITOR,CERAMIC 0.022MF/25V
C1211	1-164-227-11	s	CAPACITOR,CERAMIC 0.022MF/25V
C1212	1-126-395-11	s	CAPACITOR,ELECT 22MF/16V(CHIP)
C1213	1-162-927-11	s	CAPACITOR,CERAMIC 100PF/50V CH
C1214	1-164-156-11	s	CAPACITOR,CERAMIC 0.1MF/25V F
C1215	1-164-156-11	s	CAPACITOR,CERAMIC 0.1MF/25V F
C1251	1-164-156-11	s	CAPACITOR,CERAMIC 0.1MF/25V F
C1252	1-164-156-11	s	CAPACITOR,CERAMIC 0.1MF/25V F
C1253	1-162-927-11	s	CAPACITOR,CERAMIC 100PF/50V CH
C1254	1-126-395-11	s	CAPACITOR,ELECT 22MF/16V(CHIP)
C1255	1-162-923-11	s	CAPACITOR,CERAMIC 47PF/50V CH
C1256	1-162-923-11	s	CAPACITOR,CERAMIC 47PF/50V CH
C1257	1-162-927-11	s	CAPACITOR,CERAMIC 100PF/50V CH

(IF-820/820A/820P BOARD (for DSR-1600/P))

Ref. No. or Q'ty	Part No.	SP	Description
C1258	1-128-398-11	s	CAP, ELECT 220MF/16V (CHIP)
C1259	1-128-398-11	s	CAP, ELECT 220MF/16V (CHIP)
C1301	1-104-851-11	s	CAPACITOR,TANTALUM 10MF/10V
C1302	1-164-156-11	s	CAPACITOR,CERAMIC 0.1MF/25V F
C1303	1-164-156-11	s	CAPACITOR,CERAMIC 0.1MF/25V F
C1304	1-104-851-11	s	CAPACITOR,TANTALUM 10MF/10V
C1305	1-164-156-11	s	CAPACITOR,CERAMIC 0.1MF/25V F
C1306	1-126-394-11	s	CAPACITOR,ELECT 10MF/16V(CHIP)
C1307	1-126-394-11	s	CAPACITOR,ELECT 10MF/16V(CHIP)
C1308	1-162-927-11	s	CAPACITOR,CERAMIC 100PF/50V CH
C1309	1-162-927-11	s	CAPACITOR,CERAMIC 100PF/50V CH
C1310	1-164-227-11	s	CAPACITOR,CERAMIC 0.022MF/25V
C1311	1-164-227-11	s	CAPACITOR,CERAMIC 0.022MF/25V
C1312	1-126-395-11	s	CAPACITOR,ELECT 22MF/16V(CHIP)
C1313	1-162-927-11	s	CAPACITOR,CERAMIC 100PF/50V CH
C1314	1-164-156-11	s	CAPACITOR,CERAMIC 0.1MF/25V F
C1315	1-164-156-11	s	CAPACITOR,CERAMIC 0.1MF/25V F
C1351	1-164-156-11	s	CAPACITOR,CERAMIC 0.1MF/25V F
C1352	1-164-156-11	s	CAPACITOR,CERAMIC 0.1MF/25V F
C1353	1-162-927-11	s	CAPACITOR,CERAMIC 100PF/50V CH
C1354	1-126-395-11	s	CAPACITOR,ELECT 22MF/16V(CHIP)
C1355	1-162-923-11	s	CAPACITOR,CERAMIC 47PF/50V CH
C1356	1-162-923-11	s	CAPACITOR,CERAMIC 47PF/50V CH
C1357	1-162-927-11	s	CAPACITOR,CERAMIC 100PF/50V CH
C1358	1-128-398-11	s	CAP, ELECT 220MF/16V (CHIP)
C1359	1-128-398-11	s	CAP, ELECT 220MF/16V (CHIP)
C1406	1-126-394-11	s	CAPACITOR,ELECT 10MF/16V(CHIP)
C1407	1-126-394-11	s	CAPACITOR,ELECT 10MF/16V(CHIP)
C1408	1-162-927-11	s	CAPACITOR,CERAMIC 100PF/50V CH
C1409	1-162-927-11	s	CAPACITOR,CERAMIC 100PF/50V CH
C1410	1-164-227-11	s	CAPACITOR,CERAMIC 0.022MF/25V
C1411	1-164-227-11	s	CAPACITOR,CERAMIC 0.022MF/25V
C1412	1-126-395-11	s	CAPACITOR,ELECT 22MF/16V(CHIP)
C1413	1-162-927-11	s	CAPACITOR,CERAMIC 100PF/50V CH
C1414	1-164-156-11	s	CAPACITOR,CERAMIC 0.1MF/25V F
C1415	1-164-156-11	s	CAPACITOR,CERAMIC 0.1MF/25V F
C1451	1-164-156-11	s	CAPACITOR,CERAMIC 0.1MF/25V F
C1452	1-164-156-11	s	CAPACITOR,CERAMIC 0.1MF/25V F
C1453	1-162-927-11	s	CAPACITOR,CERAMIC 100PF/50V CH
C1454	1-126-395-11	s	CAPACITOR,ELECT 22MF/16V(CHIP)
C1455	1-162-923-11	s	CAPACITOR,CERAMIC 47PF/50V CH
C1456	1-162-923-11	s	CAPACITOR,CERAMIC 47PF/50V CH
C1457	1-162-927-11	s	CAPACITOR,CERAMIC 100PF/50V CH
C1458	1-128-398-11	s	CAP, ELECT 220MF/16V (CHIP)
C1459	1-128-398-11	s	CAP, ELECT 220MF/16V (CHIP)
CN200	1-794-873-11	o	CONNECTOR, BNC 2P
CN401	1-794-822-11	s	CONNECTOR, COAXIAL (BNC TYPE)
CN402	1-569-587-31	s	CONNECTOR, DIN
CN403	1-794-822-11	s	CONNECTOR, COAXIAL (BNC TYPE)
CN501	1-794-822-11	s	CONNECTOR, COAXIAL (BNC TYPE)
CN600	1-764-117-21	s	PLUG,(D) SUB CONNECTOR 15P
CN900	1-695-038-11	s	CONNECTOR ASSY,BNC 1P
CN1001	1-573-566-11	s	CONNECTOR (DELC-J9SAF-1029)
CN1004	1-794-820-11	s	JACK, PIN (1P)
CN1151	1-794-097-11	s	CONNECTOR, ROUND TYPE [for DSR-1600(UC), 1600P]
CN1151	1-794-099-11	s	CONNECTOR, ROUND TYPE
CN1251	1-794-097-11	s	CONNECTOR, ROUND TYPE [for DSR-1600(UC), 1600P]

(IF-820/820A/820P BOARD (for DSR-1600/P))

Ref. No. or Q'ty	Part No.	SP	Description
CN1251	1-794-099-11	s	CONNECTOR, ROUND TYPE [for DSR-1600(J)]
CN1351	1-794-097-11	s	CONNECTOR, ROUND TYPE [for DSR-1600(UC), 1600P]
CN1351	1-794-099-11	s	CONNECTOR, ROUND TYPE [for DSR-1600(J)]
CN1451	1-794-097-11	s	CONNECTOR, ROUND TYPE [for DSR-1600(UC), 1600P]
CN1451	1-794-099-11	s	CONNECTOR, ROUND TYPE [for DSR-1600(J)]
D31	8-719-820-41	s	DIODE 1SS302
D32	8-719-820-41	s	DIODE 1SS302
D33	8-719-941-86	s	DIODE DAN202U
D201	8-719-941-23	s	DIODE DA204U
D400	8-719-976-99	s	DIODE DTZ5.1B
D401	8-719-024-81	s	DIODE 1SS300-TE85L
D600	8-719-941-23	s	DIODE DA204U
D703	8-719-404-35	s	DIODE MA141WK
D900	8-719-941-04	s	DIODE SB007-03CP
D901	8-719-941-04	s	DIODE SB007-03CP
D902	8-719-941-04	s	DIODE SB007-03CP
D903	8-719-157-20	s	DIODE RD4.3M-B
D904	8-719-157-20	s	DIODE RD4.3M-B
D905	8-719-157-20	s	DIODE RD4.3M-B
D1151	8-719-820-41	s	DIODE 1SS302
D1152	8-719-820-41	s	DIODE 1SS302
D1251	8-719-820-41	s	DIODE 1SS302
D1252	8-719-820-41	s	DIODE 1SS302
D1351	8-719-820-41	s	DIODE 1SS302
D1352	8-719-820-41	s	DIODE 1SS302
D1451	8-719-820-41	s	DIODE 1SS302
D1452	8-719-820-41	s	DIODE 1SS302
FL100	1-239-896-12	s	FILTER, EMI (SMD)
FL200	1-233-614-11	s	FILTER, LOW PASS
FL201	1-233-598-11	s	FILTER, LOW PASS [for DSR-1600(J), (UC)]
FL201	1-233-599-11	s	FILTER, LOW PASS [for DSR-1600P]
FL202	1-233-598-11	s	FILTER, LOW PASS [for DSR-1600(J), (UC)]
FL202	1-233-599-11	s	FILTER, LOW PASS [for DSR-1600P]
FL203	1-239-896-12	s	FILTER, EMI (SMD)
FL204	1-239-896-12	s	FILTER, EMI (SMD)
FL300	1-239-771-11	s	FILTER, LOW PASS
FL400	1-239-896-12	s	FILTER, EMI (SMD)
FL401	1-239-896-12	s	FILTER, EMI (SMD)
FL402	1-239-896-12	s	FILTER, EMI (SMD)
FL403	1-239-896-12	s	FILTER, EMI (SMD)
FL404	1-239-896-12	s	FILTER, EMI (SMD)
FL500	1-239-896-12	s	FILTER, EMI (SMD)
FL700	1-233-674-21	s	FILTER, EMI
FL701	1-233-674-21	s	FILTER, EMI
FL1001	1-239-895-11	s	FILTER, EMI (SMD)
FL1002	1-239-896-12	s	FILTER, EMI (SMD)
FL1003	1-239-896-12	s	FILTER, EMI (SMD)
FL1004	1-239-896-12	s	FILTER, EMI (SMD)
FL1005	1-239-896-12	s	FILTER, EMI (SMD)
FL1151	1-239-895-11	s	FILTER, EMI (SMD)
FL1152	1-239-895-11	s	FILTER, EMI (SMD)

http://getMANUAL.com

(IF-820/820A/820P BOARD (for DSR-1600/P))

Ref. No. or Q'ty	Part No.	SP	Description
FL1251	1-239-895-11	s	FILTER, EMI (SMD)
FL1252	1-239-895-11	s	FILTER, EMI (SMD)
FL1351	1-239-895-11	s	FILTER, EMI (SMD)
FL1352	1-239-895-11	s	FILTER, EMI (SMD)
FL1451	1-239-895-11	s	FILTER, EMI (SMD)
FL1452	1-239-895-11	s	FILTER, EMI (SMD)
IC200	8-759-278-58	s	IC NJM4558V (TE2)
IC202	8-759-278-58	s	IC NJM4558V (TE2)
IC203	8-759-278-58	s	IC NJM4558V (TE2)
IC204	8-759-198-63	s	IC S-81230SG-QB-T1
IC205	8-752-052-82	s	IC CXA1432M
IC206	8-759-449-58	s	IC LM7131BCM5X
IC208	8-759-196-97	s	IC TC7SH32FU (TE85R)
IC209	8-752-369-84	s	IC CXD2309Q (T6)
IC210	8-759-449-58	s	IC LM7131BCM5X
IC300	8-752-054-80	s	IC CXA1521M
IC301	8-752-054-80	s	IC CXA1521M
IC302	8-759-196-12	s	IC SN74LS221DB
IC303	8-759-287-54	s	IC TL084CPW (E20)
IC304	8-759-082-61	s	IC TC4W53FU
IC305	8-759-082-61	s	IC TC4W53FU
IC306	8-759-359-66	s	IC TL082CPW (E05)
IC307	8-752-090-56	s	IC CXA3178M-T4
IC400	8-752-052-73	s	IC CXA1451M
IC401	8-759-449-58	s	IC LM7131BCM5X
IC402	8-759-082-61	s	IC TC4W53FU
IC403	8-759-196-97	s	IC TC7SH32FU (TE85R)
IC404	8-759-287-54	s	IC TL084CPW (E20)
IC405	8-759-082-61	s	IC TC4W53FU
IC406	8-752-052-73	s	IC CXA1451M
IC407	8-759-449-58	s	IC LM7131BCM5X
IC506	8-759-082-57	s	IC TC7W04FU
IC507	8-752-061-02	s	IC CXA1450M
IC508	8-752-052-73	s	IC CXA1451M
IC509	8-759-987-27	s	IC LM1881M
IC600	8-759-173-16	s	IC TL062CPW
IC601	8-759-076-06	s	IC TL064CPW
IC602	8-759-278-58	s	IC NJM4558V (TE2)
IC603	8-759-324-03	s	IC HA17431UA(TL)
IC604	8-759-248-78	s	IC MB88102PFV-G-BND-ER
IC605	8-759-523-97	s	IC TC74VHC123AFT(EL)
IC606	8-759-076-06	s	IC TL064CPW
IC607	8-759-076-06	s	IC TL064CPW
IC608	8-759-522-17	s	IC NJM79M09DLA(TE1)
IC609	8-759-522-18	s	IC NJM78M09DLA(TE1)
IC700	8-759-524-50	s	IC TC74VHC541FT(EL)
IC701	8-759-524-50	s	IC TC74VHC541FT(EL)
IC704	8-759-082-61	s	IC TC4W53FU
IC705	8-759-702-08	s	IC NJM360M
IC706	8-752-335-47	s	IC CXD1216M
IC707	8-759-523-02	s	IC TC74HC4053AFT(EL)
IC708	8-759-271-86	s	IC TC7SH04FU
IC709	8-759-271-86	s	IC TC7SH04FU
IC710	8-759-702-08	s	IC NJM360M
IC713	8-759-681-40	s	IC CXD9128AR
IC714	8-759-650-01	s	IC CXD9125R
IC715	8-759-196-93	s	IC TC7SH00FU-TE85R
IC715 *1	DELETE		

(IF-820/820A/820P BOARD (for DSR-1600/P))

Ref. No. or Q'ty	Part No.	SP	Description
IC716	8-759-524-24	o	IC TC7WT241FU(TE12R)
IC800	8-752-369-84	s	IC CXD2309Q (T6)
IC900	8-759-539-90	s	IC LM2940SX-5.0
IC901	8-759-539-89	s	IC LM2990SX-5.0
IC902	8-759-172-41	s	IC L78M09T-TL
IC903	8-759-324-03	s	IC HA17431UA(TL)
IC904	8-759-710-78	s	IC NJM082BM
IC905	8-759-710-78	s	IC NJM082BM
IC1001	8-759-711-85	s	IC NJM4580E-D
IC1002	8-759-711-85	s	IC NJM4580E-D
IC1003	8-759-711-85	s	IC NJM4580E-D
IC1005	8-759-536-23	s	IC AK4324-VF-E2
IC1101	8-759-536-23	s	IC AK4324-VF-E2
IC1102	8-759-711-85	s	IC NJM4580E-D
IC1103	8-759-523-01	s	IC TC74HC4052AFT(EL)
IC1104	8-759-490-41	s	IC TC74VHCT541AFT(EL)
IC1105	8-759-524-24	o	IC TC7WT241FU(TE12R)
IC1151	8-759-523-01	s	IC TC74HC4052AFT(EL)
IC1152	8-759-711-85	s	IC NJM4580E-D
IC1153	8-759-281-24	s	IC SSM-2142S (R)
IC1202	8-759-711-85	s	IC NJM4580E-D
IC1203	8-759-523-01	s	IC TC74HC4052AFT(EL)
IC1251	8-759-523-01	s	IC TC74HC4052AFT(EL)
IC1252	8-759-711-85	s	IC NJM4580E-D
IC1253	8-759-281-24	s	IC SSM-2142S (R)
IC1301	8-759-536-23	s	IC AK4324-VF-E2
IC1302	8-759-711-85	s	IC NJM4580E-D
IC1303	8-759-523-01	s	IC TC74HC4052AFT(EL)
IC1351	8-759-523-01	s	IC TC74HC4052AFT(EL)
IC1352	8-759-711-85	s	IC NJM4580E-D
IC1353	8-759-281-24	s	IC SSM-2142S (R)
IC1402	8-759-711-85	s	IC NJM4580E-D
IC1403	8-759-523-01	s	IC TC74HC4052AFT(EL)
IC1406	8-759-524-24	o	IC TC7WT241FU(TE12R)
IC1451	8-759-523-01	s	IC TC74HC4052AFT(EL)
IC1452	8-759-711-85	s	IC NJM4580E-D
IC1453	8-759-281-24	s	IC SSM-2142S (R)
L200	1-414-400-11	s	INDUCTOR, 22UH
L201	1-414-400-11	s	INDUCTOR, 22UH
L202	1-414-400-11	s	INDUCTOR, 22UH
L203	1-414-400-11	s	INDUCTOR, 22UH
L204	1-414-400-11	s	INDUCTOR, 22UH
L205	1-414-400-11	s	INDUCTOR, 22UH
L206	1-414-398-11	s	INDUCTOR (SMD) 10UH
L207	1-414-398-11	s	INDUCTOR (SMD) 10UH
L208	1-414-400-11	s	INDUCTOR, 22UH
L209	1-410-387-11	s	INDUCTOR,CHIP 33UH (3225)
L210	1-414-400-11	s	INDUCTOR, 22UH
L212	1-410-387-11	s	INDUCTOR,CHIP 33UH (3225)
L213	1-414-400-11	s	INDUCTOR, 22UH
L300	1-414-400-11	s	INDUCTOR, 22UH
L301	1-414-400-11	s	INDUCTOR, 22UH
L302	1-414-404-11	s	INDUCTOR (SMD) 100UH
L303	1-414-400-11	s	INDUCTOR, 22UH
L304	1-410-389-31	s	INDUCTOR,CHIP 47UH (3225) [for DSR-1600(J), (UC)]
L304	1-410-386-11	s	CHIP INDUCTOR 27UH (3225) [for DSR-1600P]
L305	1-410-389-31	s	INDUCTOR,CHIP 47UH (3225) [for DSR-1600(J), (UC)]

(IF-820/820A/820P BOARD (for DSR-1600/P))

Ref. No. or Q'ty	Part No.	SP	Description
L305	1-410-386-11	s	CHIP INDUCTOR 27UH (3225) [for DSR-1600P]
L306	1-410-389-31	s	INDUCTOR,CHIP 47UH (3225) [for DSR-1600(J), (UC)]
L306	1-410-386-11	s	CHIP INDUCTOR 27UH (3225) [for DSR-1600P]
L307	1-410-389-31	s	INDUCTOR,CHIP 47UH (3225) [for DSR-1600(J), (UC)]
L307	1-410-386-11	s	CHIP INDUCTOR 27UH (3225) [for DSR-1600P]
L308	1-414-400-11	s	INDUCTOR, 22UH
L309	1-414-400-11	s	INDUCTOR, 22UH
L400	1-414-400-11	s	INDUCTOR, 22UH
L401	1-414-400-11	s	INDUCTOR, 22UH
L402	1-414-400-11	s	INDUCTOR, 22UH
L403	1-410-391-11	s	INDUCTOR,CHIP 68UH (3225) [for DSR-1600(J), (UC)]
L403	1-414-404-11	s	INDUCTOR (SMD) 100UH [for DSR-1600P]
L404	1-410-389-31	s	INDUCTOR,CHIP 47UH (3225)
L405	1-410-387-11	s	INDUCTOR,CHIP 33UH (3225)
L505	1-410-391-11	s	INDUCTOR,CHIP 68UH (3225) [for DSR-1600(J), (UC)]
L505	1-410-392-11	s	INDUCTOR,CHIP 82UH (3225) [for DSR-1600P]
L506	1-414-404-11	s	INDUCTOR (SMD) 100UH
L507	1-410-391-11	s	INDUCTOR,CHIP 68UH (3225)
L508	1-414-400-11	s	INDUCTOR, 22UH
L509	1-414-400-11	s	INDUCTOR, 22UH
L600	1-414-400-11	s	INDUCTOR, 22UH
L601	1-414-400-11	s	INDUCTOR, 22UH
L700	1-414-400-11	s	INDUCTOR, 22UH
L702	1-414-400-11	s	INDUCTOR, 22UH
L703	1-414-400-11	s	INDUCTOR, 22UH
L704	1-414-400-11	s	INDUCTOR, 22UH
L705	1-410-389-31	s	INDUCTOR,CHIP 47UH (3225) [for DSR-1600(J), (UC)]
L705	1-410-386-11	s	CHIP INDUCTOR 27UH (3225) [for DSR-1600P]
L706	1-410-389-31	s	INDUCTOR,CHIP 47UH (3225) [for DSR-1600(J), (UC)]
L706	1-410-386-11	s	CHIP INDUCTOR 27UH (3225) [for DSR-1600P]
L707	1-414-400-11	s	INDUCTOR, 22UH
L708	1-414-400-11	s	INDUCTOR, 22UH
L709	1-414-398-11	s	INDUCTOR (SMD) 10UH
L711	1-414-400-11	s	INDUCTOR, 22UH
L712	1-414-398-11	s	INDUCTOR (SMD) 10UH
L800	1-414-400-11	s	INDUCTOR, 22UH
L802	1-414-400-11	s	INDUCTOR, 22UH
L803	1-414-400-11	s	INDUCTOR, 22UH
L900	1-414-400-11	s	INDUCTOR, 22UH
L901	1-424-641-11	s	COIL, CHOKE 22UH
L902	1-414-400-11	s	INDUCTOR, 22UH
L903	1-424-643-11	s	COIL, CHOKE 10UH
L904	1-424-643-11	s	COIL, CHOKE 10UH
L905	1-414-398-11	s	INDUCTOR (SMD) 10UH
L906	1-414-398-11	s	INDUCTOR (SMD) 10UH
L911	1-414-398-11	s	INDUCTOR (SMD) 10UH
PS900	⚠ 1-533-282-21	s	CIRCUIT PROTECTOR 2A (3225)

(IF-820/820A/820P BOARD (for DSR-1600/P))

Ref. No. or Q'ty	Part No.	SP	Description
PS901	⚠ 1-533-282-21	s	CIRCUIT PROTECTOR 2A (3225)
PS902	⚠ 1-533-282-21	s	CIRCUIT PROTECTOR 2A (3225)
PS903	⚠ 1-533-282-21	s	CIRCUIT PROTECTOR 2A (3225)
PS904	⚠ 1-533-282-21	s	CIRCUIT PROTECTOR 2A (3225)
PS905	⚠ 1-533-282-21	s	CIRCUIT PROTECTOR 2A (3225)
Q31	8-729-029-14	s	TRANSISTOR DTC144EUA-T106
Q32	8-729-110-94	s	TRANSISTOR 2SK425-X15 (0.2W)
Q33	8-729-141-48	s	TRANSISTOR 2SB624-BV345
Q34	8-729-110-94	s	TRANSISTOR 2SK425-X15 (0.2W)
Q200	8-729-117-32	s	TRANSISTOR 2SC4177
Q201	8-729-117-32	s	TRANSISTOR 2SC4177
Q202	8-729-140-63	s	TRANSISTOR 2SA1611-M5M6
Q203	8-729-140-63	s	TRANSISTOR 2SA1611-M5M6
Q204	8-729-117-32	s	TRANSISTOR 2SC4177
Q205	8-729-140-63	s	TRANSISTOR 2SA1611-M5M6
Q206	8-729-117-32	s	TRANSISTOR 2SC4177
Q207	8-729-117-32	s	TRANSISTOR 2SC4177
Q208	8-729-422-44	s	TRANSISTOR 2SK663
Q209	8-729-422-44	s	TRANSISTOR 2SK663
Q210	8-729-140-63	s	TRANSISTOR 2SA1611-M5M6
Q211	8-729-117-32	s	TRANSISTOR 2SC4177
Q212	8-729-140-63	s	TRANSISTOR 2SA1611-M5M6
Q213	8-729-117-32	s	TRANSISTOR 2SC4177
Q214	8-729-117-32	s	TRANSISTOR 2SC4177
Q215	8-729-422-44	s	TRANSISTOR 2SK663
Q216	8-729-422-44	s	TRANSISTOR 2SK663
Q217	8-729-140-63	s	TRANSISTOR 2SA1611-M5M6
Q300	8-729-143-14	s	TRANSISTOR 2SC4176-B35
Q301	8-729-140-63	s	TRANSISTOR 2SA1611-M5M6
Q302	8-729-117-32	s	TRANSISTOR 2SC4177
Q303	8-729-140-63	s	TRANSISTOR 2SA1611-M5M6
Q304	8-729-117-32	s	TRANSISTOR 2SC4177
Q305	8-729-117-32	s	TRANSISTOR 2SC4177
Q306	8-729-117-32	s	TRANSISTOR 2SC4177
Q307	8-729-117-32	s	TRANSISTOR 2SC4177
Q308	8-729-117-32	s	TRANSISTOR 2SC4177
Q309	8-729-117-32	s	TRANSISTOR 2SC4177
Q310	8-729-143-14	s	TRANSISTOR 2SC4176-B35
Q311	8-729-903-82	s	TRANSISTOR FMW2
Q312	8-729-903-82	s	TRANSISTOR FMW2
Q400	8-729-026-58	s	TRANSISTOR FMY3A-T148
Q401	8-729-117-32	s	TRANSISTOR 2SC4177
Q402	8-729-143-14	s	TRANSISTOR 2SC4176-B35
Q403	8-729-117-32	s	TRANSISTOR 2SC4177
Q404	8-729-026-58	s	TRANSISTOR FMY3A-T148
Q405	8-729-143-14	s	TRANSISTOR 2SC4176-B35
Q406	8-729-140-63	s	TRANSISTOR 2SA1611-M5M6
Q407	8-729-117-32	s	TRANSISTOR 2SC4177
Q408	8-729-140-63	s	TRANSISTOR 2SA1611-M5M6
Q409	8-729-117-32	s	TRANSISTOR 2SC4177
Q410	8-729-117-32	s	TRANSISTOR 2SC4177
Q500	8-729-117-32	s	TRANSISTOR 2SC4177
Q501	8-729-117-32	s	TRANSISTOR 2SC4177
Q502	8-729-117-32	s	TRANSISTOR 2SC4177
Q503	8-729-026-58	s	TRANSISTOR FMY3A-T148
Q504	8-729-117-32	s	TRANSISTOR 2SC4177
Q505	8-729-117-32	s	TRANSISTOR 2SC4177
Q506	8-729-907-46	s	TRANSISTOR IMZ1
Q507	8-729-026-58	s	TRANSISTOR FMY3A-T148

(IF-820/820A/820P BOARD (for DSR-1600/P))

Ref. No. or Q'ty	Part No.	SP	Description
Q700	8-729-117-32	s	TRANSISTOR 2SC4177
Q701	8-729-117-32	s	TRANSISTOR 2SC4177
Q702	8-729-029-14	s	TRANSISTOR DTC144EUA-T106
Q703	8-729-029-14	s	TRANSISTOR DTC144EUA-T106
Q705	8-729-140-63	s	TRANSISTOR 2SA1611-M5M6
Q800	8-729-117-32	s	TRANSISTOR 2SC4177
Q801	8-729-117-32	s	TRANSISTOR 2SC4177
Q802	8-729-117-32	s	TRANSISTOR 2SC4177
Q900	8-729-141-48	s	TRANSISTOR 2SB624-BV345
Q901	8-729-020-94	s	TRANSISTOR 2SA1314C-TE12L
Q902	8-729-808-42	s	TRANSISTOR 2SD1624-T
Q1001	8-729-209-07	s	TRANSISTOR 2SC4213-B
Q1002	8-729-209-07	s	TRANSISTOR 2SC4213-B
Q1003	8-729-209-07	s	TRANSISTOR 2SC4213-B
Q1151	8-729-209-07	s	TRANSISTOR 2SC4213-B
Q1153	8-729-209-07	s	TRANSISTOR 2SC4213-B
Q1154	8-729-209-07	s	TRANSISTOR 2SC4213-B
Q1251	8-729-209-07	s	TRANSISTOR 2SC4213-B
Q1253	8-729-209-07	s	TRANSISTOR 2SC4213-B
Q1254	8-729-209-07	s	TRANSISTOR 2SC4213-B
Q1351	8-729-209-07	s	TRANSISTOR 2SC4213-B
Q1353	8-729-209-07	s	TRANSISTOR 2SC4213-B
Q1354	8-729-209-07	s	TRANSISTOR 2SC4213-B
Q1451	8-729-209-07	s	TRANSISTOR 2SC4213-B
Q1453	8-729-209-07	s	TRANSISTOR 2SC4213-B
Q1454	8-729-209-07	s	TRANSISTOR 2SC4213-B
R31	1-218-839-11	s	RESISTOR,CHIP 470 1/16W (1608)
R32	1-218-823-11	s	RESISTOR,CHIP 100 1/16W (1608)
R33	1-218-861-11	s	RESISTOR,CHIP 3.9K 1/16W(1608)
R34	1-218-863-11	s	RESISTOR,CHIP 4.7K 1/16W(1608)
R201	1-218-839-11	s	RESISTOR,CHIP 470 1/16W (1608)
R202	1-218-863-11	s	RESISTOR,CHIP 4.7K 1/16W(1608)
R203	1-218-871-11	s	RESISTOR,CHIP 10K 1/16W (1608)
R204	1-218-861-11	s	RESISTOR,CHIP 3.9K 1/16W(1608)
R205	1-218-871-11	s	RESISTOR,CHIP 10K 1/16W (1608)
R206	1-218-871-11	s	RESISTOR,CHIP 10K 1/16W (1608)
R207	1-218-847-11	s	RESISTOR, CHIP 1K 1/16W (1608)
R208	1-218-864-11	s	RESISTOR,CHIP 5.1K 1/16W(1608)
R209	1-218-864-11	s	RESISTOR,CHIP 5.1K 1/16W(1608)
R210	1-218-849-11	s	RESISTOR,CHIP 1.2K 1/16W(1608)
R211	1-218-849-11	s	RESISTOR,CHIP 1.2K 1/16W(1608)
R212	1-218-871-11	s	RESISTOR,CHIP 10K 1/16W (1608)
R213	1-218-871-11	s	RESISTOR,CHIP 10K 1/16W (1608)
R214	1-218-855-11	s	RESISTOR,CHIP 2.2K 1/16W(1608)
R215	1-218-861-11	s	RESISTOR,CHIP 3.9K 1/16W(1608)
R216	1-218-871-11	s	RESISTOR,CHIP 10K 1/16W (1608)
R217	1-218-883-11	s	RESISTOR,CHIP 33K 1/16W (1608)
R218	1-218-871-11	s	RESISTOR,CHIP 10K 1/16W (1608)
R219	1-218-871-11	s	RESISTOR,CHIP 10K 1/16W (1608)
R220	1-218-883-11	s	RESISTOR,CHIP 33K 1/16W (1608)
R221	1-216-857-11	s	RESISTOR,CHIP 1M 1/16W(1608)
R222	1-216-857-11	s	RESISTOR,CHIP 1M 1/16W(1608)
R223	1-218-883-11	s	RESISTOR,CHIP 33K 1/16W (1608)
R224	1-218-883-11	s	RESISTOR,CHIP 33K 1/16W (1608)
R225	1-218-851-11	s	RESISTOR,CHIP 1.5K 1/16W(1608)
R226	1-218-851-11	s	RESISTOR,CHIP 1.5K 1/16W(1608)
R227	1-218-871-11	s	RESISTOR,CHIP 10K 1/16W (1608)
R228	1-218-871-11	s	RESISTOR,CHIP 10K 1/16W (1608)

(IF-820/820A/820P BOARD (for DSR-1600/P))

Ref. No. or Q'ty	Part No.	SP	Description
R229	1-218-879-11	s	RESISTOR,CHIP 22K 1/16W (1608)
R230	1-216-857-11	s	RESISTOR,CHIP 1M 1/16W(1608)
R231	1-218-883-11	s	RESISTOR,CHIP 33K 1/16W (1608)
R235	1-218-857-11	s	RESISTOR,CHIP 2.7K 1/16W(1608)
R236	1-218-875-11	s	RESISTOR,CHIP 15K 1/16W (1608)
R237	1-218-873-11	s	RESISTOR,CHIP 12K 1/16W (1608)
R238	1-218-835-11	s	RESISTOR,CHIP 330 1/16W (1608)
R239	1-218-835-11	s	RESISTOR,CHIP 330 1/16W (1608)
R240	1-218-835-11	s	RESISTOR,CHIP 330 1/16W (1608)
R241	1-218-835-11	s	RESISTOR,CHIP 330 1/16W (1608)
R242	1-218-835-11	s	RESISTOR,CHIP 330 1/16W (1608)
R243	1-218-835-11	s	RESISTOR,CHIP 330 1/16W (1608)
R244	1-218-847-11	s	RESISTOR, CHIP 1K 1/16W (1608)
R245	1-218-847-11	s	RESISTOR, CHIP 1K 1/16W (1608)
R246	1-218-847-11	s	RESISTOR, CHIP 1K 1/16W (1608)
R247	1-218-847-11	s	RESISTOR, CHIP 1K 1/16W (1608)
R248	1-218-823-11	s	RESISTOR,CHIP 100 1/16W (1608)
R249	1-218-847-11	s	RESISTOR, CHIP 1K 1/16W (1608)
R250	1-218-847-11	s	RESISTOR, CHIP 1K 1/16W (1608)
R251	1-218-849-11	s	RESISTOR,CHIP 1.2K 1/16W(1608)
R252	1-218-863-11	s	RESISTOR,CHIP 4.7K 1/16W(1608)
R253	1-218-823-11	s	RESISTOR,CHIP 100 1/16W (1608)
R254	1-218-847-11	s	RESISTOR, CHIP 1K 1/16W (1608)
R255	1-218-847-11	s	RESISTOR, CHIP 1K 1/16W (1608)
R256	1-218-847-11	s	RESISTOR, CHIP 1K 1/16W (1608)
R257	1-218-835-11	s	RESISTOR,CHIP 330 1/16W (1608)
R258	1-218-823-11	s	RESISTOR,CHIP 100 1/16W (1608)
R259	1-218-863-11	s	RESISTOR,CHIP 4.7K 1/16W(1608)
R260	1-216-864-11	s	RESISTOR,CHIP 0 1/16W (1608) [for DSR-1600(J), (UC)]
R260	1-218-829-11	s	RESISTOR,CHIP 180 1/16W (1608) [for DSR-1600P]
R261	1-218-841-11	s	RESISTOR,CHIP 560 1/16W (1608) [for DSR-1600(J), (UC)]
R261	1-218-836-11	s	RESISTOR,CHIP 360 1/16W (1608) [for DSR-1600P]
R262	1-218-855-11	s	RESISTOR,CHIP 2.2K 1/16W(1608)
R263	1-218-855-11	s	RESISTOR,CHIP 2.2K 1/16W(1608)
R264	1-211-990-11	s	RESISTOR,CHIP 75 1/16W (1608)
R265	1-218-823-11	s	RESISTOR,CHIP 100 1/16W (1608)
R266	1-218-847-11	s	RESISTOR, CHIP 1K 1/16W (1608)
R267	1-218-847-11	s	RESISTOR, CHIP 1K 1/16W (1608)
R268	1-218-849-11	s	RESISTOR,CHIP 1.2K 1/16W(1608)
R269	1-218-863-11	s	RESISTOR,CHIP 4.7K 1/16W(1608)
R270	1-218-823-11	s	RESISTOR,CHIP 100 1/16W (1608)
R271	1-218-847-11	s	RESISTOR, CHIP 1K 1/16W (1608)
R272	1-218-847-11	s	RESISTOR, CHIP 1K 1/16W (1608)
R273	1-218-847-11	s	RESISTOR, CHIP 1K 1/16W (1608)
R274	1-218-835-11	s	RESISTOR,CHIP 330 1/16W (1608)
R275	1-218-823-11	s	RESISTOR,CHIP 100 1/16W (1608)
R276	1-218-863-11	s	RESISTOR,CHIP 4.7K 1/16W(1608)
R277	1-216-864-11	s	RESISTOR,CHIP 0 1/16W (1608) [for DSR-1600(J), (UC)]
R277	1-218-829-11	s	RESISTOR,CHIP 180 1/16W (1608) [for DSR-1600P]
R278	1-218-841-11	s	RESISTOR,CHIP 560 1/16W (1608) [for DSR-1600(J), (UC)]
R278	1-218-836-11	s	RESISTOR,CHIP 360 1/16W (1608) [for DSR-1600P]
R279	1-218-855-11	s	RESISTOR,CHIP 2.2K 1/16W(1608)

(IF-820/820A/820P BOARD (for DSR-1600/P))

Ref. No. or Q'ty	Part No.	SP	Description
R280	1-218-855-11	s	RESISTOR,CHIP 2.2K 1/16W(1608)
R281	1-211-990-11	s	RESISTOR,CHIP 75 1/16W (1608)
R282	1-218-883-11	s	RESISTOR,CHIP 33K 1/16W (1608)
R283	1-216-864-11	s	RESISTOR,CHIP 0 1/16W (1608)
R286	1-218-847-11	s	RESISTOR, CHIP 1K 1/16W (1608)
R287	1-218-847-11	s	RESISTOR, CHIP 1K 1/16W (1608)
R288	1-218-875-11	s	RESISTOR,CHIP 15K 1/16W (1608)
R289	1-218-847-11	s	RESISTOR, CHIP 1K 1/16W (1608)
R290	1-218-871-11	s	RESISTOR,CHIP 10K 1/16W (1608)
R291	1-218-823-11	s	RESISTOR,CHIP 100 1/16W (1608)
R292	1-216-864-11	s	RESISTOR,CHIP 0 1/16W (1608)
R293	1-216-864-11	s	RESISTOR,CHIP 0 1/16W (1608)
R294	1-216-864-11	s	RESISTOR,CHIP 0 1/16W (1608)
R300	1-218-847-11	s	RESISTOR, CHIP 1K 1/16W (1608)
R301	1-218-887-11	s	RESISTOR,CHIP 47K 1/16W (1608)
R302	1-218-847-11	s	RESISTOR, CHIP 1K 1/16W (1608)
R303	1-218-839-11	s	RESISTOR,CHIP 470 1/16W (1608)
R304	1-218-835-11	s	RESISTOR,CHIP 330 1/16W (1608)
R305	1-218-864-11	s	RESISTOR,CHIP 5.1K 1/16W(1608) [for DSR-1600(J), (UC)]
R305	1-218-871-11	s	RESISTOR,CHIP 10K 1/16W (1608) [for DSR-1600P]
R306	1-218-873-11	s	RESISTOR,CHIP 12K 1/16W (1608)
R307	1-218-879-11	s	RESISTOR,CHIP 22K 1/16W (1608)
R308	1-218-873-11	s	RESISTOR,CHIP 12K 1/16W (1608)
R309	1-218-879-11	s	RESISTOR,CHIP 22K 1/16W (1608)
R310	1-216-857-11	s	RESISTOR,CHIP 1M 1/16W(1608)
R311	1-216-857-11	s	RESISTOR,CHIP 1M 1/16W(1608)
R312	1-218-847-11	s	RESISTOR, CHIP 1K 1/16W (1608)
R313	1-218-847-11	s	RESISTOR, CHIP 1K 1/16W (1608)
R314	1-218-883-11	s	RESISTOR,CHIP 33K 1/16W (1608) [for DSR-1600(J), (UC)]
R314	1-218-878-11	s	RESISTOR,CHIP 20K 1/16W (1608) [for DSR-1600P]
R315	1-218-847-11	s	RESISTOR, CHIP 1K 1/16W (1608)
R316	1-218-887-11	s	RESISTOR,CHIP 47K 1/16W (1608)
R317	1-218-847-11	s	RESISTOR, CHIP 1K 1/16W (1608)
R318	1-218-887-11	s	RESISTOR,CHIP 47K 1/16W (1608)
R319	1-218-847-11	s	RESISTOR, CHIP 1K 1/16W (1608)
R320	1-218-847-11	s	RESISTOR, CHIP 1K 1/16W (1608)
R321	1-218-863-11	s	RESISTOR,CHIP 4.7K 1/16W(1608)
R322	1-218-863-11	s	RESISTOR,CHIP 4.7K 1/16W(1608)
R323	1-218-847-11	s	RESISTOR, CHIP 1K 1/16W (1608)
R324	1-218-847-11	s	RESISTOR, CHIP 1K 1/16W (1608)
R325	1-218-847-11	s	RESISTOR, CHIP 1K 1/16W (1608)
R326	1-218-879-11	s	RESISTOR,CHIP 22K 1/16W (1608)
R327	1-218-871-11	s	RESISTOR,CHIP 10K 1/16W (1608)
R328	1-218-847-11	s	RESISTOR, CHIP 1K 1/16W (1608)
R329	1-218-879-11	s	RESISTOR,CHIP 22K 1/16W (1608)
R330	1-218-823-11	s	RESISTOR,CHIP 100 1/16W (1608)
R331	1-218-857-11	s	RESISTOR,CHIP 2.7K 1/16W(1608)
R332	1-218-855-11	s	RESISTOR,CHIP 2.2K 1/16W(1608)
R333	1-218-855-11	s	RESISTOR,CHIP 2.2K 1/16W(1608)
R334	1-218-895-11	s	RESISTOR,CHIP 100K 1/16W(1608)
R335	1-218-847-11	s	RESISTOR, CHIP 1K 1/16W (1608)
R336	1-218-847-11	s	RESISTOR, CHIP 1K 1/16W (1608)
R337	1-218-847-11	s	RESISTOR, CHIP 1K 1/16W (1608)
R338	1-218-847-11	s	RESISTOR, CHIP 1K 1/16W (1608)
R339	1-218-847-11	s	RESISTOR, CHIP 1K 1/16W (1608)

(IF-820/820A/820P BOARD (for DSR-1600/P))

Ref. No. or Q'ty	Part No.	SP	Description
R340	1-218-835-11	s	RESISTOR,CHIP 330 1/16W (1608)
R341	1-218-835-11	s	RESISTOR,CHIP 330 1/16W (1608)
R342	1-218-847-11	s	RESISTOR, CHIP 1K 1/16W (1608)
R343	1-218-847-11	s	RESISTOR, CHIP 1K 1/16W (1608)
R344	1-218-847-11	s	RESISTOR, CHIP 1K 1/16W (1608)
R345	1-218-847-11	s	RESISTOR, CHIP 1K 1/16W (1608)
R346	1-218-847-11	s	RESISTOR, CHIP 1K 1/16W (1608)
R347	1-218-855-11	s	RESISTOR,CHIP 2.2K 1/16W(1608)
R348	1-218-843-11	s	RESISTOR,CHIP 680 1/16W (1608)
R349	1-218-859-11	s	RESISTOR,CHIP 3.3K 1/16W(1608)
R350	1-218-847-11	s	RESISTOR, CHIP 1K 1/16W (1608) [for DSR-1600P]
R351	1-218-857-11	s	RESISTOR,CHIP 2.7K 1/16W(1608)
R352	1-218-855-11	s	RESISTOR,CHIP 2.2K 1/16W(1608)
R353	1-218-855-11	s	RESISTOR,CHIP 2.2K 1/16W(1608)
R354	1-218-855-11	s	RESISTOR,CHIP 2.2K 1/16W(1608)
R355	1-211-985-11	s	RESISTOR,CHIP 47 1/16W (1608)
R357	1-218-855-11	s	RESISTOR,CHIP 2.2K 1/16W(1608)
R358	1-218-855-11	s	RESISTOR,CHIP 2.2K 1/16W(1608)
R359	1-218-863-11	s	RESISTOR,CHIP 4.7K 1/16W(1608)
R360	1-218-847-11	s	RESISTOR, CHIP 1K 1/16W (1608)
R400	1-218-855-11	s	RESISTOR,CHIP 2.2K 1/16W(1608)
R401	1-218-823-11	s	RESISTOR,CHIP 100 1/16W (1608)
R402	1-218-855-11	s	RESISTOR,CHIP 2.2K 1/16W(1608)
R403	1-218-855-11	s	RESISTOR,CHIP 2.2K 1/16W(1608)
R404	1-218-839-11	s	RESISTOR,CHIP 470 1/16W (1608)
R405	1-218-849-11	s	RESISTOR,CHIP 1.2K 1/16W(1608)
R406	1-218-837-11	s	RESISTOR,CHIP 390 1/16W (1608)
R407	1-218-841-11	s	RESISTOR,CHIP 560 1/16W (1608)
R408	1-218-855-11	s	RESISTOR,CHIP 2.2K 1/16W(1608)
R409	1-218-855-11	s	RESISTOR,CHIP 2.2K 1/16W(1608)
R410	1-211-990-11	s	RESISTOR,CHIP 75 1/16W (1608)
R411	1-218-875-11	s	RESISTOR,CHIP 15K 1/16W (1608)
R412	1-218-889-11	s	RESISTOR,CHIP 56K 1/16W(1608)
R413	1-211-990-11	s	RESISTOR,CHIP 75 1/16W (1608)
R414	1-211-990-11	s	RESISTOR,CHIP 75 1/16W (1608)
R415	1-218-871-11	s	RESISTOR,CHIP 10K 1/16W (1608)
R416	1-218-871-11	s	RESISTOR,CHIP 10K 1/16W (1608)
R417	1-218-823-11	s	RESISTOR,CHIP 100 1/16W (1608)
R418	1-218-847-11	s	RESISTOR, CHIP 1K 1/16W (1608)
R419	1-218-847-11	s	RESISTOR, CHIP 1K 1/16W (1608)
R420	1-218-849-11	s	RESISTOR,CHIP 1.2K 1/16W(1608)
R421	1-218-847-11	s	RESISTOR, CHIP 1K 1/16W (1608)
R422	1-218-855-11	s	RESISTOR,CHIP 2.2K 1/16W(1608)
R423	1-218-847-11	s	RESISTOR, CHIP 1K 1/16W (1608)
R424	1-218-847-11	s	RESISTOR, CHIP 1K 1/16W (1608)
R425	1-218-851-11	s	RESISTOR,CHIP 1.5K 1/16W(1608)
R426	1-218-855-11	s	RESISTOR,CHIP 2.2K 1/16W(1608)
R427	1-218-855-11	s	RESISTOR,CHIP 2.2K 1/16W(1608)
R428	1-218-839-11	s	RESISTOR,CHIP 470 1/16W (1608)
R429	1-218-860-11	s	RESISTOR,CHIP 3.6K 1/16W(1608)
R430	1-211-990-11	s	RESISTOR,CHIP 75 1/16W (1608)
R431	1-218-863-11	s	RESISTOR,CHIP 4.7K 1/16W(1608)
R432	1-218-863-11	s	RESISTOR,CHIP 4.7K 1/16W(1608)
R433	1-218-847-11	s	RESISTOR, CHIP 1K 1/16W (1608)
R434	1-216-813-11	s	RESISTOR, CHIP 220 1/16W 1608
R435	1-218-847-11	s	RESISTOR, CHIP 1K 1/16W (1608)
R436	1-218-847-11	s	RESISTOR, CHIP 1K 1/16W (1608)
R437	1-218-879-11	s	RESISTOR,CHIP 22K 1/16W (1608)

(IF-820/820A/820P BOARD (for DSR-1600/P))

Ref. No. or Q'ty	Part No.	SP	Description
R438	1-218-847-11	s	RESISTOR, CHIP 1K 1/16W (1608)
R439	1-218-863-11	s	RESISTOR,CHIP 4.7K 1/16W(1608)
R440	1-218-823-11	s	RESISTOR,CHIP 100 1/16W (1608)
R441	1-218-843-11	s	RESISTOR,CHIP 680 1/16W (1608) [for DSR-1600(J), (UC)]
R441	1-218-842-11	s	RESISTOR,CHIP 620 1/16W (1608) [for DSR-1600P]
R442	1-218-823-11	s	RESISTOR,CHIP 100 1/16W (1608)
R443	1-218-842-11	s	RESISTOR,CHIP 620 1/16W (1608) [for DSR-1600(J), (UC)]
R443	1-218-845-11	s	RESISTOR,CHIP 820 1/16W (1608) [for DSR-1600P]
R444	1-216-853-11	s	RESISTOR,CHIP 470K 1/16W(1608)
R445	1-218-847-11	s	RESISTOR, CHIP 1K 1/16W (1608)
R446	1-218-847-11	s	RESISTOR, CHIP 1K 1/16W (1608)
R447	1-218-847-11	s	RESISTOR, CHIP 1K 1/16W (1608)
R448	1-218-855-11	s	RESISTOR,CHIP 2.2K 1/16W(1608)
R449	1-218-871-11	s	RESISTOR,CHIP 10K 1/16W (1608)
R450	1-218-851-11	s	RESISTOR,CHIP 1.5K 1/16W(1608)
R451	1-218-840-11	s	RESISTOR,CHIP 510 1/16W (1608)
R452	1-218-860-11	s	RESISTOR,CHIP 3.6K 1/16W(1608)
R453	1-218-871-11	s	RESISTOR,CHIP 10K 1/16W (1608)
R454	1-218-863-11	s	RESISTOR,CHIP 4.7K 1/16W(1608)
R455	1-218-847-11	s	RESISTOR, CHIP 1K 1/16W (1608)
R456	1-218-849-11	s	RESISTOR,CHIP 1.2K 1/16W(1608)
R457	1-218-840-11	s	RESISTOR,CHIP 510 1/16W (1608) [for DSR-1600(J), (UC)]
R457	1-218-832-11	s	RESISTOR,CHIP 240 1/16W (1608) [for DSR-1600P]
R458	1-211-990-11	s	RESISTOR,CHIP 75 1/16W (1608)
R459	1-218-895-11	s	RESISTOR,CHIP 100K 1/16W(1608)
R461	1-218-841-11	s	RESISTOR,CHIP 560 1/16W (1608)
R462	1-218-855-11	s	RESISTOR,CHIP 2.2K 1/16W(1608)
R500	1-218-857-11	s	RESISTOR,CHIP 2.7K 1/16W(1608)
R501	1-211-990-11	s	RESISTOR,CHIP 75 1/16W (1608)
R502	1-218-887-11	s	RESISTOR,CHIP 47K 1/16W (1608)
R503	1-218-857-11	s	RESISTOR,CHIP 2.7K 1/16W(1608) [for DSR-1600(J), (UC)]
R503	1-218-851-11	s	RESISTOR,CHIP 1.5K 1/16W(1608) [for DSR-1600P]
R504	1-218-871-11	s	RESISTOR,CHIP 10K 1/16W (1608)
R505	1-218-847-11	s	RESISTOR, CHIP 1K 1/16W (1608)
R506	1-218-871-11	s	RESISTOR,CHIP 10K 1/16W (1608)
R507	1-218-839-11	s	RESISTOR,CHIP 470 1/16W (1608)
R508	1-218-847-11	s	RESISTOR, CHIP 1K 1/16W (1608)
R509	1-218-847-11	s	RESISTOR, CHIP 1K 1/16W (1608)
R510	1-218-847-11	s	RESISTOR, CHIP 1K 1/16W (1608)
R511	1-218-855-11	s	RESISTOR,CHIP 2.2K 1/16W(1608)
R512	1-218-853-11	s	RESISTOR,CHIP 1.8K 1/16W(1608) [for DSR-1600(J), (UC)]
R512	1-218-851-11	s	RESISTOR,CHIP 1.5K 1/16W(1608) [for DSR-1600P]
R513	1-218-851-11	s	RESISTOR,CHIP 1.5K 1/16W(1608)
R514	1-218-871-11	s	RESISTOR,CHIP 10K 1/16W (1608)
R515	1-211-985-11	s	RESISTOR,CHIP 47 1/16W (1608)
R516	1-218-857-11	s	RESISTOR,CHIP 2.7K 1/16W(1608)
R517	1-218-857-11	s	RESISTOR,CHIP 2.7K 1/16W(1608)
R518	1-216-820-11	s	RESISTOR, CHIP 820 1/16W 1608
R519	1-211-990-11	s	RESISTOR,CHIP 75 1/16W (1608)
R520	1-218-857-11	s	RESISTOR,CHIP 2.7K 1/16W(1608)

(IF-820/820A/820P BOARD (for DSR-1600/P))

Ref. No. or Q'ty	Part No.	SP	Description
R521	1-216-855-11	s	RESISTOR, CHIP 680K 1/16W 1608
R522	1-218-847-11	s	RESISTOR, CHIP 1K 1/16W (1608)
R523	1-218-857-11	s	RESISTOR,CHIP 2.7K 1/16W(1608)
R524	1-218-823-11	s	RESISTOR,CHIP 100 1/16W (1608)
R525	1-218-875-11	s	RESISTOR,CHIP 15K 1/16W (1608)
R526	1-218-875-11	s	RESISTOR,CHIP 15K 1/16W (1608)
R527	1-211-977-11	s	RESISTOR,CHIP 22 1/16W (1608)
R528	1-218-863-11	s	RESISTOR,CHIP 4.7K 1/16W(1608)
R529	1-218-843-11	s	RESISTOR,CHIP 680 1/16W (1608)
R530	1-218-873-11	s	RESISTOR,CHIP 12K 1/16W (1608)
R531	1-218-831-11	s	RESISTOR, CHIP 220 1/16W(1608) [for DSR-1600(J), (UC)]
R531	1-218-840-11	s	RESISTOR,CHIP 510 1/16W (1608) [for DSR-1600P]
R600	1-218-892-11	s	RESISTOR,CHIP 75K 1/16W (1608)
R601	1-218-892-11	s	RESISTOR,CHIP 75K 1/16W (1608)
R602	1-218-892-11	s	RESISTOR,CHIP 75K 1/16W (1608)
R603	1-218-892-11	s	RESISTOR,CHIP 75K 1/16W (1608)
R604	1-218-871-11	s	RESISTOR,CHIP 10K 1/16W (1608)
R605	1-218-871-11	s	RESISTOR,CHIP 10K 1/16W (1608)
R606	1-218-871-11	s	RESISTOR,CHIP 10K 1/16W (1608)
R607	1-218-871-11	s	RESISTOR,CHIP 10K 1/16W (1608)
R608	1-218-871-11	s	RESISTOR,CHIP 10K 1/16W (1608)
R609	1-218-871-11	s	RESISTOR,CHIP 10K 1/16W (1608)
R610	1-218-871-11	s	RESISTOR,CHIP 10K 1/16W (1608)
R611	1-218-871-11	s	RESISTOR,CHIP 10K 1/16W (1608)
R612	1-218-878-11	s	RESISTOR,CHIP 20K 1/16W (1608)
R613	1-218-878-11	s	RESISTOR,CHIP 20K 1/16W (1608)
R614	1-218-878-11	s	RESISTOR,CHIP 20K 1/16W (1608)
R615	1-218-878-11	s	RESISTOR,CHIP 20K 1/16W (1608)
R616	1-218-871-11	s	RESISTOR,CHIP 10K 1/16W (1608) [for DSR-1600P]
R617	1-218-875-11	s	RESISTOR,CHIP 15K 1/16W (1608) [for DSR-1600(J), (UC)]
R617	1-218-867-11	s	RESISTOR,CHIP 6.8K 1/16W(1608) [for DSR-1600P]
R618	1-218-873-11	s	RESISTOR,CHIP 12K 1/16W (1608)
R619	1-216-864-11	s	RESISTOR,CHIP 0 1/16W (1608)
R620	1-216-864-11	s	RESISTOR,CHIP 0 1/16W (1608)
R621	1-218-863-11	s	RESISTOR,CHIP 4.7K 1/16W(1608)
R622	1-218-849-11	s	RESISTOR,CHIP 1.2K 1/16W(1608)
R623	1-218-857-11	s	RESISTOR,CHIP 2.7K 1/16W(1608)
R624	1-218-857-11	s	RESISTOR,CHIP 2.7K 1/16W(1608)
R625	1-218-855-11	s	RESISTOR,CHIP 2.2K 1/16W(1608)
R626	1-216-864-11	s	RESISTOR,CHIP 0 1/16W (1608)
R627	1-218-871-11	s	RESISTOR,CHIP 10K 1/16W (1608)
R628	1-218-873-11	s	RESISTOR,CHIP 12K 1/16W (1608)
R629	1-218-879-11	s	RESISTOR,CHIP 22K 1/16W (1608)
R630	1-218-869-11	s	RESISTOR,CHIP 8.2K 1/16W(1608)
R631	1-218-883-11	s	RESISTOR,CHIP 33K 1/16W (1608)
R632	1-218-847-11	s	RESISTOR, CHIP 1K 1/16W (1608)
R633	1-218-885-11	s	RESISTOR,CHIP 39K 1/16W (1608)
R634	1-218-847-11	s	RESISTOR, CHIP 1K 1/16W (1608)
R635	1-218-879-11	s	RESISTOR,CHIP 22K 1/16W (1608)
R636	1-218-839-11	s	RESISTOR,CHIP 470 1/16W (1608)
R637	1-218-883-11	s	RESISTOR,CHIP 33K 1/16W (1608)
R638	1-218-895-11	s	RESISTOR,CHIP 100K 1/16W(1608)
R640	1-218-823-11	s	RESISTOR,CHIP 100 1/16W (1608)
R641	1-218-823-11	s	RESISTOR,CHIP 100 1/16W (1608)
R642	1-218-873-11	s	RESISTOR,CHIP 12K 1/16W (1608)

(IF-820/820A/820P BOARD (for DSR-1600/P))

Ref. No. or Q'ty	Part No.	SP	Description
R643	1-218-873-11	s	RESISTOR,CHIP 12K 1/16W (1608)
R644	1-218-857-11	s	RESISTOR,CHIP 2.7K 1/16W(1608)
R645	1-218-851-11	s	RESISTOR,CHIP 1.5K 1/16W(1608)
R646	1-218-843-11	s	RESISTOR,CHIP 680 1/16W (1608)
R647	1-218-847-11	s	RESISTOR, CHIP 1K 1/16W (1608)
R648	1-218-855-11	s	RESISTOR,CHIP 2.2K 1/16W(1608)
R649	1-218-855-11	s	RESISTOR,CHIP 2.2K 1/16W(1608)
R650	1-218-851-11	s	RESISTOR,CHIP 1.5K 1/16W(1608)
R651	1-218-855-11	s	RESISTOR,CHIP 2.2K 1/16W(1608)
R652	1-218-855-11	s	RESISTOR,CHIP 2.2K 1/16W(1608)
R702	1-218-871-11	s	RESISTOR,CHIP 10K 1/16W (1608)
R703	1-218-895-11	s	RESISTOR,CHIP 100K 1/16W(1608)
R704	1-218-895-11	s	RESISTOR,CHIP 100K 1/16W(1608)
R705	1-218-895-11	s	RESISTOR,CHIP 100K 1/16W(1608)
R706	1-218-895-11	s	RESISTOR,CHIP 100K 1/16W(1608)
R707	1-216-864-11	s	RESISTOR,CHIP 0 1/16W (1608)
R708	1-216-864-11	s	RESISTOR,CHIP 0 1/16W (1608)
R709	1-218-863-11	s	RESISTOR,CHIP 4.7K 1/16W(1608)
R710	1-218-847-11	s	RESISTOR, CHIP 1K 1/16W (1608)
R711	1-218-847-11	s	RESISTOR, CHIP 1K 1/16W (1608)
R712	1-218-835-11	s	RESISTOR,CHIP 330 1/16W (1608)
R713	1-218-847-11	s	RESISTOR, CHIP 1K 1/16W (1608)
R714	1-218-847-11	s	RESISTOR, CHIP 1K 1/16W (1608)
R715	1-216-843-11	s	RESISTOR,CHIP 68K 1/16W (1608)
R716	1-218-847-11	s	RESISTOR, CHIP 1K 1/16W (1608)
R717	1-218-895-11	s	RESISTOR,CHIP 100K 1/16W(1608) [for DSR-1600(J), (UC)]
R718	1-216-864-11	s	RESISTOR,CHIP 0 1/16W (1608) [for DSR-1600P]
R719	1-218-895-11	s	RESISTOR,CHIP 100K 1/16W(1608) [for DSR-1600(J), (UC)]
R720	1-216-864-11	s	RESISTOR,CHIP 0 1/16W (1608) [for DSR-1600P]
R721	1-218-863-11	s	RESISTOR,CHIP 4.7K 1/16W(1608)
R722	1-218-847-11	s	RESISTOR, CHIP 1K 1/16W (1608)
R723	1-218-871-11	s	RESISTOR,CHIP 10K 1/16W (1608)
R724	1-218-871-11	s	RESISTOR,CHIP 10K 1/16W (1608)
R725	1-218-863-11	s	RESISTOR,CHIP 4.7K 1/16W(1608)
R726	1-218-883-11	s	RESISTOR,CHIP 33K 1/16W (1608)
R728	1-218-871-11	s	RESISTOR,CHIP 10K 1/16W (1608)
R729	1-218-871-11	s	RESISTOR,CHIP 10K 1/16W (1608)
R730	1-218-871-11	s	RESISTOR,CHIP 10K 1/16W (1608)
R731	1-218-863-11	s	RESISTOR,CHIP 4.7K 1/16W(1608)
R732	1-218-883-11	s	RESISTOR,CHIP 33K 1/16W (1608)
R733	1-218-883-11	s	RESISTOR,CHIP 33K 1/16W (1608)
R734	1-216-864-11	s	RESISTOR,CHIP 0 1/16W (1608)
R735	1-216-864-11	s	RESISTOR,CHIP 0 1/16W (1608)
R736	1-216-864-11	s	RESISTOR,CHIP 0 1/16W (1608)
R737	1-216-864-11	s	RESISTOR,CHIP 0 1/16W (1608)
R738	1-218-847-11	s	RESISTOR, CHIP 1K 1/16W (1608)
R739	1-216-864-11	s	RESISTOR,CHIP 0 1/16W (1608)
R740	1-216-864-11	s	RESISTOR,CHIP 0 1/16W (1608)
R741	1-216-864-11	s	RESISTOR,CHIP 0 1/16W (1608)
R742	1-216-864-11	s	RESISTOR,CHIP 0 1/16W (1608)
R743	1-216-843-11	s	RESISTOR,CHIP 68K 1/16W (1608)
R744	1-218-847-11	s	RESISTOR, CHIP 1K 1/16W (1608)
R745	1-218-847-11	s	RESISTOR, CHIP 1K 1/16W (1608)
R746	1-218-871-11	s	RESISTOR,CHIP 10K 1/16W (1608)
R754	1-211-985-11	s	RESISTOR,CHIP 47 1/16W (1608)

(IF-820/820A/820P BOARD (for DSR-1600/P))

Ref. No. or Q'ty	Part No.	SP	Description
R755	1-218-863-11	s	RESISTOR,CHIP 4.7K 1/16W(1608)
R757	1-216-864-11	s	RESISTOR,CHIP 0 1/16W (1608)
R759 *1	1-216-864-11	s	RESISTOR,CHIP 0 1/16W (1608)
R760	1-211-977-11	s	RESISTOR,CHIP 22 1/16W (1608)
R761	1-211-977-11	s	RESISTOR,CHIP 22 1/16W (1608)
R762	1-211-977-11	s	RESISTOR,CHIP 22 1/16W (1608)
R763	1-211-977-11	s	RESISTOR,CHIP 22 1/16W (1608)
R764	1-216-864-11	s	RESISTOR,CHIP 0 1/16W (1608)
R765	1-216-864-11	s	RESISTOR,CHIP 0 1/16W (1608)
R766	1-216-864-11	s	RESISTOR,CHIP 0 1/16W (1608)
R767	1-216-864-11	s	RESISTOR,CHIP 0 1/16W (1608)
R768	1-218-871-11	s	RESISTOR,CHIP 10K 1/16W (1608) [for DSR-1600(J), (UC)]
R769	1-218-871-11	s	RESISTOR,CHIP 10K 1/16W (1608) [for DSR-1600P]
R771	1-216-864-11	s	RESISTOR,CHIP 0 1/16W (1608)
R772	1-216-864-11	s	RESISTOR,CHIP 0 1/16W (1608)
R772 *1	DELETE		
R773	1-216-864-11	s	RESISTOR,CHIP 0 1/16W (1608)
R774	1-216-864-11	s	RESISTOR,CHIP 0 1/16W (1608)
R775	1-216-864-11	s	RESISTOR,CHIP 0 1/16W (1608)
R776	1-216-864-11	s	RESISTOR,CHIP 0 1/16W (1608)
R777	1-216-864-11	s	RESISTOR,CHIP 0 1/16W (1608)
R778	1-216-864-11	s	RESISTOR,CHIP 0 1/16W (1608)
R779	1-211-977-11	s	RESISTOR,CHIP 22 1/16W (1608)
R780	1-211-977-11	s	RESISTOR,CHIP 22 1/16W (1608)
R781	1-218-823-11	s	RESISTOR,CHIP 100 1/16W (1608)
R782	1-218-823-11	s	RESISTOR,CHIP 100 1/16W (1608)
R783	1-218-823-11	s	RESISTOR,CHIP 100 1/16W (1608)
R784	1-218-823-11	s	RESISTOR,CHIP 100 1/16W (1608)
R800	1-218-849-11	s	RESISTOR,CHIP 1.2K 1/16W(1608) [for DSR-1600(J), (UC)]
R800	1-218-848-11	s	RESISTOR,CHIP 1.1K 1/16W(1608) [for DSR-1600P]
R801	1-211-990-11	s	RESISTOR,CHIP 75 1/16W (1608)
R802	1-211-990-11	s	RESISTOR,CHIP 75 1/16W (1608)
R803	1-218-861-11	s	RESISTOR,CHIP 3.9K 1/16W(1608)
R804	1-211-990-11	s	RESISTOR,CHIP 75 1/16W (1608)
R805	1-218-873-11	s	RESISTOR,CHIP 12K 1/16W (1608)
R806	1-218-839-11	s	RESISTOR,CHIP 470 1/16W (1608)
R807	1-216-864-11	s	RESISTOR,CHIP 0 1/16W (1608) [for DSR-1600(J), (UC)]
R807	1-218-823-11	s	RESISTOR,CHIP 100 1/16W (1608) [for DSR-1600P]
R808	1-218-839-11	s	RESISTOR,CHIP 470 1/16W (1608)
R810	1-218-839-11	s	RESISTOR,CHIP 470 1/16W (1608)
R811	1-211-985-11	s	RESISTOR,CHIP 47 1/16W (1608)
R812	1-211-985-11	s	RESISTOR,CHIP 47 1/16W (1608)
R813	1-211-985-11	s	RESISTOR,CHIP 47 1/16W (1608)
R906	1-218-853-11	s	RESISTOR,CHIP 1.8K 1/16W(1608)
R907	1-218-879-11	s	RESISTOR,CHIP 22K 1/16W (1608)
R908	1-218-879-11	s	RESISTOR,CHIP 22K 1/16W (1608)
R909	1-218-847-11	s	RESISTOR, CHIP 1K 1/16W (1608)
R910	1-218-879-11	s	RESISTOR,CHIP 22K 1/16W (1608)
R911	1-218-879-11	s	RESISTOR,CHIP 22K 1/16W (1608)
R912	1-216-864-11	s	RESISTOR,CHIP 0 1/16W (1608)
R913	1-218-887-11	s	RESISTOR,CHIP 47K 1/16W (1608)
R914	1-218-887-11	s	RESISTOR,CHIP 47K 1/16W (1608)
R1001	1-216-797-11	s	RESISTOR,CHIP 10 1/16W 1608
R1002	1-218-880-11	s	RESISTOR,CHIP 24K 1/16W (1608)

(IF-820/820A/820P BOARD (for DSR-1600/P))

Ref. No. or Q'ty	Part No.	SP	Description
R1003	1-218-880-11	s	RESISTOR,CHIP 24K 1/16W (1608)
R1004	1-218-881-11	s	RESISTOR, CHIP 27K 1/16W(1608)
R1005	1-218-881-11	s	RESISTOR, CHIP 27K 1/16W(1608)
R1006	1-218-880-11	s	RESISTOR,CHIP 24K 1/16W (1608)
R1007	1-218-880-11	s	RESISTOR,CHIP 24K 1/16W (1608)
R1008	1-218-881-11	s	RESISTOR, CHIP 27K 1/16W(1608)
R1009	1-218-881-11	s	RESISTOR, CHIP 27K 1/16W(1608)
R1011	1-218-864-11	s	RESISTOR,CHIP 5.1K 1/16W(1608)
R1012	1-216-803-11	s	RESISTOR,CHIP 33 1/16W (1608)
R1013	1-216-803-11	s	RESISTOR,CHIP 33 1/16W (1608)
R1014	1-216-803-11	s	RESISTOR,CHIP 33 1/16W (1608)
R1016	1-216-813-11	s	RESISTOR, CHIP 220 1/16W 1608
R1017	1-216-813-11	s	RESISTOR, CHIP 220 1/16W 1608
R1018	1-216-813-11	s	RESISTOR, CHIP 220 1/16W 1608
R1020	1-218-871-11	s	RESISTOR,CHIP 10K 1/16W (1608)
R1021	1-218-871-11	s	RESISTOR,CHIP 10K 1/16W (1608)
R1022	1-211-977-11	s	RESISTOR,CHIP 22 1/16W (1608)
R1023	1-211-977-11	s	RESISTOR,CHIP 22 1/16W (1608)
R1024	1-211-977-11	s	RESISTOR,CHIP 22 1/16W (1608)
R1025	1-211-977-11	s	RESISTOR,CHIP 22 1/16W (1608)
R1101	1-216-797-11	s	RESISTOR,CHIP 10 1/16W 1608
R1102	1-218-880-11	s	RESISTOR,CHIP 24K 1/16W (1608)
R1103	1-218-881-11	s	RESISTOR, CHIP 27K 1/16W(1608)
R1104	1-218-880-11	s	RESISTOR,CHIP 24K 1/16W (1608)
R1105	1-218-881-11	s	RESISTOR, CHIP 27K 1/16W(1608)
R1106	1-218-865-11	s	RESISTOR,CHIP 5.6K 1/16W(1608)
R1107	1-218-868-11	s	RESISTOR,CHIP 7.5K 1/16W(1608)
R1108	1-218-875-11	s	RESISTOR,CHIP 15K 1/16W (1608)
R1109	1-218-865-11	s	RESISTOR,CHIP 5.6K 1/16W(1608)
R1110	1-218-836-11	s	RESISTOR,CHIP 360 1/16W (1608)
R1111	1-218-861-11	s	RESISTOR,CHIP 3.9K 1/16W(1608)
R1112	1-218-864-11	s	RESISTOR,CHIP 5.1K 1/16W(1608)
R1113	1-211-977-11	s	RESISTOR,CHIP 22 1/16W (1608)
R1115	1-218-895-11	s	RESISTOR,CHIP 100K 1/16W(1608)
R1116	1-218-895-11	s	RESISTOR,CHIP 100K 1/16W(1608)
R1117	1-218-895-11	s	RESISTOR,CHIP 100K 1/16W(1608)
R1118	1-218-895-11	s	RESISTOR,CHIP 100K 1/16W(1608)
R1151	1-218-863-11	s	RESISTOR,CHIP 4.7K 1/16W(1608)
R1152	1-218-868-11	s	RESISTOR,CHIP 7.5K 1/16W(1608)
R1153	1-218-875-11	s	RESISTOR,CHIP 15K 1/16W (1608)
R1154	1-218-871-11	s	RESISTOR,CHIP 10K 1/16W (1608) [for DSR-1600P]
R1155	1-211-983-11	s	RESISTOR,CHIP 39 1/16W (1608)
R1156	1-218-842-11	s	RESISTOR,CHIP 620 1/16W (1608) [for DSR-1600P]
R1157	1-218-863-11	s	RESISTOR,CHIP 4.7K 1/16W(1608)
R1158	1-218-834-11	s	RESISTOR,CHIP 300 1/16W (1608)
R1159	1-218-860-11	s	RESISTOR,CHIP 3.6K 1/16W(1608)
R1160	1-218-861-11	s	RESISTOR,CHIP 3.9K 1/16W(1608)
R1161	1-218-872-11	s	RESISTOR,CHIP 11K 1/16W (1608)
R1162	1-218-861-11	s	RESISTOR,CHIP 3.9K 1/16W(1608)
R1163	1-218-872-11	s	RESISTOR,CHIP 11K 1/16W (1608)
R1164	1-216-803-11	s	RESISTOR,CHIP 33 1/16W (1608)
R1165	1-216-803-11	s	RESISTOR,CHIP 33 1/16W (1608)
R1166	1-218-871-11	s	RESISTOR,CHIP 10K 1/16W (1608)
R1167	1-218-871-11	s	RESISTOR,CHIP 10K 1/16W (1608)
R1202	1-218-880-11	s	RESISTOR,CHIP 24K 1/16W (1608)
R1203	1-218-881-11	s	RESISTOR, CHIP 27K 1/16W(1608)
R1204	1-218-880-11	s	RESISTOR,CHIP 24K 1/16W (1608)

(IF-820/820A/820P BOARD (for DSR-1600/P))

Ref. No. or Q'ty	Part No.	SP	Description
R1205	1-218-881-11	s	RESISTOR, CHIP 27K 1/16W(1608)
R1206	1-218-865-11	s	RESISTOR,CHIP 5.6K 1/16W(1608)
R1207	1-218-868-11	s	RESISTOR,CHIP 7.5K 1/16W(1608)
R1208	1-218-875-11	s	RESISTOR,CHIP 15K 1/16W (1608)
R1209	1-218-865-11	s	RESISTOR,CHIP 5.6K 1/16W(1608)
R1210	1-218-836-11	s	RESISTOR,CHIP 360 1/16W (1608)
R1211	1-218-861-11	s	RESISTOR,CHIP 3.9K 1/16W(1608)
R1212	1-218-864-11	s	RESISTOR,CHIP 5.1K 1/16W(1608)
R1251	1-218-863-11	s	RESISTOR,CHIP 4.7K 1/16W(1608)
R1252	1-218-868-11	s	RESISTOR,CHIP 7.5K 1/16W(1608)
R1253	1-218-875-11	s	RESISTOR,CHIP 15K 1/16W (1608)
R1254	1-218-871-11	s	RESISTOR,CHIP 10K 1/16W (1608) [for DSR-1600P]
R1255	1-211-983-11	s	RESISTOR,CHIP 39 1/16W (1608)
R1256	1-218-842-11	s	RESISTOR,CHIP 620 1/16W (1608) [for DSR-1600P]
R1257	1-218-863-11	s	RESISTOR,CHIP 4.7K 1/16W(1608)
R1258	1-218-834-11	s	RESISTOR,CHIP 300 1/16W (1608)
R1259	1-218-860-11	s	RESISTOR,CHIP 3.6K 1/16W(1608)
R1260	1-218-861-11	s	RESISTOR,CHIP 3.9K 1/16W(1608)
R1261	1-218-872-11	s	RESISTOR,CHIP 11K 1/16W (1608)
R1262	1-218-861-11	s	RESISTOR,CHIP 3.9K 1/16W(1608)
R1263	1-218-872-11	s	RESISTOR,CHIP 11K 1/16W (1608)
R1264	1-216-803-11	s	RESISTOR,CHIP 33 1/16W (1608)
R1265	1-216-803-11	s	RESISTOR,CHIP 33 1/16W (1608)
R1266	1-218-871-11	s	RESISTOR,CHIP 10K 1/16W (1608)
R1267	1-218-871-11	s	RESISTOR,CHIP 10K 1/16W (1608)
R1301	1-216-797-11	s	RESISTOR,CHIP 10 1/16W 1608
R1302	1-218-880-11	s	RESISTOR,CHIP 24K 1/16W (1608)
R1303	1-218-881-11	s	RESISTOR, CHIP 27K 1/16W(1608)
R1304	1-218-880-11	s	RESISTOR,CHIP 24K 1/16W (1608)
R1305	1-218-881-11	s	RESISTOR, CHIP 27K 1/16W(1608)
R1306	1-218-865-11	s	RESISTOR,CHIP 5.6K 1/16W(1608)
R1307	1-218-868-11	s	RESISTOR,CHIP 7.5K 1/16W(1608)
R1308	1-218-875-11	s	RESISTOR,CHIP 15K 1/16W (1608)
R1309	1-218-865-11	s	RESISTOR,CHIP 5.6K 1/16W(1608)
R1310	1-218-836-11	s	RESISTOR,CHIP 360 1/16W (1608)
R1311	1-218-861-11	s	RESISTOR,CHIP 3.9K 1/16W(1608)
R1312	1-218-864-11	s	RESISTOR,CHIP 5.1K 1/16W(1608)
R1313	1-211-977-11	s	RESISTOR,CHIP 22 1/16W (1608)
R1351	1-218-863-11	s	RESISTOR,CHIP 4.7K 1/16W(1608)
R1352	1-218-868-11	s	RESISTOR,CHIP 7.5K 1/16W(1608)
R1353	1-218-875-11	s	RESISTOR,CHIP 15K 1/16W (1608)
R1354	1-218-871-11	s	RESISTOR,CHIP 10K 1/16W (1608) [for DSR-1600P]
R1355	1-211-983-11	s	RESISTOR,CHIP 39 1/16W (1608)
R1356	1-218-842-11	s	RESISTOR,CHIP 620 1/16W (1608) [for DSR-1600P]
R1357	1-218-863-11	s	RESISTOR,CHIP 4.7K 1/16W(1608)
R1358	1-218-834-11	s	RESISTOR,CHIP 300 1/16W (1608)
R1359	1-218-860-11	s	RESISTOR,CHIP 3.6K 1/16W(1608)
R1360	1-218-861-11	s	RESISTOR,CHIP 3.9K 1/16W(1608)
R1361	1-218-872-11	s	RESISTOR,CHIP 11K 1/16W (1608)
R1362	1-218-861-11	s	RESISTOR,CHIP 3.9K 1/16W(1608)
R1363	1-218-872-11	s	RESISTOR,CHIP 11K 1/16W (1608)
R1364	1-216-803-11	s	RESISTOR,CHIP 33 1/16W (1608)
R1365	1-216-803-11	s	RESISTOR,CHIP 33 1/16W (1608)
R1366	1-218-871-11	s	RESISTOR,CHIP 10K 1/16W (1608)
R1367	1-218-871-11	s	RESISTOR,CHIP 10K 1/16W (1608)

(IF-820/820A/820P BOARD (for DSR-1600/P))

Ref. No. or Q'ty	Part No.	SP	Description
R1402	1-218-880-11	s	RESISTOR,CHIP 24K 1/16W (1608)
R1403	1-218-881-11	s	RESISTOR, CHIP 27K 1/16W(1608)
R1404	1-218-880-11	s	RESISTOR,CHIP 24K 1/16W (1608)
R1405	1-218-881-11	s	RESISTOR, CHIP 27K 1/16W(1608)
R1406	1-218-865-11	s	RESISTOR,CHIP 5.6K 1/16W(1608)
R1407	1-218-868-11	s	RESISTOR,CHIP 7.5K 1/16W(1608)
R1408	1-218-875-11	s	RESISTOR,CHIP 15K 1/16W (1608)
R1409	1-218-865-11	s	RESISTOR,CHIP 5.6K 1/16W(1608)
R1410	1-218-836-11	s	RESISTOR,CHIP 360 1/16W (1608)
R1411	1-218-861-11	s	RESISTOR,CHIP 3.9K 1/16W(1608)
R1412	1-218-864-11	s	RESISTOR,CHIP 5.1K 1/16W(1608)
R1451	1-218-863-11	s	RESISTOR,CHIP 4.7K 1/16W(1608)
R1452	1-218-868-11	s	RESISTOR,CHIP 7.5K 1/16W(1608)
R1453	1-218-875-11	s	RESISTOR,CHIP 15K 1/16W (1608)
R1454	1-218-871-11	s	RESISTOR,CHIP 10K 1/16W (1608) [for DSR-1600P]
R1455	1-211-983-11	s	RESISTOR,CHIP 39 1/16W (1608)
R1456	1-218-842-11	s	RESISTOR,CHIP 620 1/16W (1608) [for DSR-1600P]
R1457	1-218-863-11	s	RESISTOR,CHIP 4.7K 1/16W(1608)
R1458	1-218-834-11	s	RESISTOR,CHIP 300 1/16W (1608)
R1459	1-218-860-11	s	RESISTOR,CHIP 3.6K 1/16W(1608)
R1460	1-218-861-11	s	RESISTOR,CHIP 3.9K 1/16W(1608)
R1461	1-218-872-11	s	RESISTOR,CHIP 11K 1/16W (1608)
R1462	1-218-861-11	s	RESISTOR,CHIP 3.9K 1/16W(1608)
R1463	1-218-872-11	s	RESISTOR,CHIP 11K 1/16W (1608)
R1464	1-216-803-11	s	RESISTOR,CHIP 33 1/16W (1608)
R1465	1-216-803-11	s	RESISTOR,CHIP 33 1/16W (1608)
R1466	1-218-871-11	s	RESISTOR,CHIP 10K 1/16W (1608)
R1467	1-218-871-11	s	RESISTOR,CHIP 10K 1/16W (1608)
RB700	1-239-711-11	s	NETWORK, RESISTOR 0 (1608)
RB701	1-239-711-11	s	NETWORK, RESISTOR 0 (1608)
RB702	1-239-711-11	s	NETWORK, RESISTOR 0 (1608)
RB1002	1-239-409-11	s	RESISTOR NETWORK 47 (1608)
RB1101	1-239-409-11	s	RESISTOR NETWORK 47 (1608)
RB1301	1-239-409-11	s	RESISTOR NETWORK 47 (1608)
RV200	1-237-035-11	s	RESISTOR,ADJ,CERMET 5K
RV201	1-237-035-11	s	RESISTOR,ADJ,CERMET 5K
RV203	1-237-034-11	s	RESISTOR,ADJ,CERMET 2K
RV204	1-237-030-11	s	RESISTOR,ADJ,CERMET 100
RV205	1-237-034-11	s	RESISTOR,ADJ,CERMET 2K
RV206	1-237-030-11	s	RESISTOR,ADJ,CERMET 100
RV300	1-237-035-11	s	RESISTOR,ADJ,CERMET 5K
RV301	1-237-035-11	s	RESISTOR,ADJ,CERMET 5K
RV302	1-237-038-11	s	RESISTOR,ADJ,CERMET 50K
RV303	1-237-038-11	s	RESISTOR,ADJ,CERMET 50K
RV304	1-237-034-11	s	RESISTOR,ADJ,CERMET 2K
RV400	1-237-032-11	s	RESISTOR,ADJ,CERMET 500
RV401	1-237-030-11	s	RESISTOR,ADJ,CERMET 100
RV402	1-237-032-11	s	RESISTOR,ADJ,CERMET 500
RV405	1-237-032-11	s	RESISTOR,ADJ,CERMET 500
RV500	1-237-035-11	s	RESISTOR,ADJ,CERMET 5K
RV501	1-237-034-11	s	RESISTOR,ADJ,CERMET 2K
RV600	1-237-036-11	s	RESISTOR, ADJ,CERMET 10K
RV601	1-237-036-11	s	RESISTOR, ADJ,CERMET 10K
RV700	1-237-036-11	s	RESISTOR, ADJ,CERMET 10K
RV701	1-237-036-11	s	RESISTOR, ADJ,CERMET 10K
RV1101	1-237-034-11	s	RESISTOR,ADJ,CERMET 2K

(IF-820/820A/820P BOARD (for DSR-1600/P))

Ref. No. or Q'ty	Part No.	SP	Description
RV1201	1-237-034-11	s	RESISTOR,ADJ,CERMET 2K
RV1301	1-237-034-11	s	RESISTOR,ADJ,CERMET 2K
RV1401	1-237-034-11	s	RESISTOR,ADJ,CERMET 2K
THP300	1-809-352-11	s	THERMISTOR,NTC
THP610	1-809-352-11	s	THERMISTOR,NTC [for DSR-1600P]
X200	1-781-123-21	s	OSCILLATOR, CRYSTAL
X201	1-781-123-21	s	OSCILLATOR, CRYSTAL
X202	1-781-123-21	s	OSCILLATOR, CRYSTAL
X700	1-767-617-11	s	OSCILLATOR, CRYSTAL [for DSR-1600(J), (UC)]
X700	1-767-619-11	s	OSCILLATOR, CRYSTAL [for DSR-1600P]
X701	1-767-695-21	s	OSCILLATOR, CRYSTAL

KY-484 BOARD (for DSR-1800/P)

*1: Lot No.093 and higher

Ref. No. or Q'ty	Part No.	SP	Description
1pc	A-8326-510-A	o	MOUNTED CIRCUIT BOARD, KY-484
C100	1-163-038-00	s	CAPACITOR, CERAMIC 0.1MF/25V
C101	1-126-396-11	s	CAPACITOR,ELECT 47MF/16V(CHIP)
C102	1-163-038-00	s	CAPACITOR, CERAMIC 0.1MF/25V
C103	1-126-396-11	s	CAPACITOR,ELECT 47MF/16V(CHIP)
C104	1-163-038-00	s	CAPACITOR, CERAMIC 0.1MF/25V
C105	1-163-009-11	s	CAPACITOR,CERAMIC 1000PF/50V
C106	1-163-037-11	s	CAPACITOR,CHIP CERAMIC 0.022MF
C107	1-126-396-11	s	CAPACITOR,ELECT 47MF/16V(CHIP)
C108	1-163-038-00	s	CAPACITOR, CERAMIC 0.1MF/25V
C109	1-163-133-00	s	CAPACITOR,CHIP CERAMIC 470PF
C110	1-165-319-11	s	CAPACITOR,CERAMIC 0.1MF/50V
C111	1-126-393-11	s	CAPACITOR ELECT 33MF/10V(CHIP)
C112	1-165-319-11	s	CAPACITOR,CERAMIC 0.1MF/50V
C113	1-165-319-11	s	CAPACITOR,CERAMIC 0.1MF/50V
C114	1-163-038-00	s	CAPACITOR, CERAMIC 0.1MF/25V
C118	1-163-038-00	s	CAPACITOR, CERAMIC 0.1MF/25V
C119	1-165-319-11	s	CAPACITOR,CERAMIC 0.1MF/50V
C120	1-165-319-11	s	CAPACITOR,CERAMIC 0.1MF/50V
C200	1-163-257-11	s	CAPACITOR CERAMIC 180PF/50V
C201	1-163-257-11	s	CAPACITOR CERAMIC 180PF/50V
C202	1-163-257-11	s	CAPACITOR CERAMIC 180PF/50V
C203	1-163-257-11	s	CAPACITOR CERAMIC 180PF/50V
C204	1-163-038-00	s	CAPACITOR, CERAMIC 0.1MF/25V
C205	1-163-038-00	s	CAPACITOR, CERAMIC 0.1MF/25V
C206	1-163-038-00	s	CAPACITOR, CERAMIC 0.1MF/25V
C207	1-163-133-00	s	CAPACITOR,CHIP CERAMIC 470PF
C300	1-163-038-00	s	CAPACITOR, CERAMIC 0.1MF/25V
C400	1-163-133-00	s	CAPACITOR,CHIP CERAMIC 470PF
C401	1-126-393-11	s	CAPACITOR ELECT 33MF/10V(CHIP)
C402	1-165-319-11	s	CAPACITOR,CERAMIC 0.1MF/50V
C403	1-165-319-11	s	CAPACITOR,CERAMIC 0.1MF/50V
C404	1-128-399-11	s	CAPACITOR ELECT 330MF/16V(CHIP
C405	1-163-021-91	s	CAPACITOR, CERAMIC 0.01MF/50V
C406	1-128-405-11	s	CAPACITOR.ELECT 22MF/50V(CHIP)
C500	1-163-251-11	s	CAPACITOR CERAMIC 100PF/50V
C501	1-163-251-11	s	CAPACITOR CERAMIC 100PF/50V
C502	1-163-251-11	s	CAPACITOR CERAMIC 100PF/50V
C503	1-163-251-11	s	CAPACITOR CERAMIC 100PF/50V
C504	1-163-251-11	s	CAPACITOR CERAMIC 100PF/50V
C505	1-163-251-11	s	CAPACITOR CERAMIC 100PF/50V
C506	1-163-251-11	s	CAPACITOR CERAMIC 100PF/50V
C507	1-163-251-11	s	CAPACITOR CERAMIC 100PF/50V
C508	1-163-251-11	s	CAPACITOR CERAMIC 100PF/50V
C509	1-163-251-11	s	CAPACITOR CERAMIC 100PF/50V
C510	1-163-251-11	s	CAPACITOR CERAMIC 100PF/50V
C511	1-163-251-11	s	CAPACITOR CERAMIC 100PF/50V
C512	1-163-251-11	s	CAPACITOR CERAMIC 100PF/50V
C513	1-163-251-11	s	CAPACITOR CERAMIC 100PF/50V
C514	1-163-251-11	s	CAPACITOR CERAMIC 100PF/50V
C515	1-163-251-11	s	CAPACITOR CERAMIC 100PF/50V
C516	1-163-251-11	s	CAPACITOR CERAMIC 100PF/50V
C517	1-163-251-11	s	CAPACITOR CERAMIC 100PF/50V
C518	1-163-251-11	s	CAPACITOR CERAMIC 100PF/50V
C519	1-163-251-11	s	CAPACITOR CERAMIC 100PF/50V
C520	1-163-251-11	s	CAPACITOR CERAMIC 100PF/50V
C521	1-163-251-11	s	CAPACITOR CERAMIC 100PF/50V

Ref. No. or Q'ty	Part No.	SP	Description
C522	1-163-251-11	s	CAPACITOR CERAMIC 100PF/50V
C523	1-163-251-11	s	CAPACITOR CERAMIC 100PF/50V
C524	1-163-251-11	s	CAPACITOR CERAMIC 100PF/50V
C525	1-163-251-11	s	CAPACITOR CERAMIC 100PF/50V
C526	1-163-251-11	s	CAPACITOR CERAMIC 100PF/50V
C527	1-163-251-11	s	CAPACITOR CERAMIC 100PF/50V
C528	1-163-251-11	s	CAPACITOR CERAMIC 100PF/50V
C529	1-163-251-11	s	CAPACITOR CERAMIC 100PF/50V
C530	1-163-251-11	s	CAPACITOR CERAMIC 100PF/50V
C531	1-163-251-11	s	CAPACITOR CERAMIC 100PF/50V
C532	1-163-251-11	s	CAPACITOR CERAMIC 100PF/50V
C533	1-163-251-11	s	CAPACITOR CERAMIC 100PF/50V
C534	1-163-251-11	s	CAPACITOR CERAMIC 100PF/50V
C535	1-163-251-11	s	CAPACITOR CERAMIC 100PF/50V
C536	1-163-251-11	s	CAPACITOR CERAMIC 100PF/50V
C537	1-163-251-11	s	CAPACITOR CERAMIC 100PF/50V
C538	1-163-251-11	s	CAPACITOR CERAMIC 100PF/50V
C539	1-163-251-11	s	CAPACITOR CERAMIC 100PF/50V
C540	1-163-251-11	s	CAPACITOR CERAMIC 100PF/50V
C541	1-163-251-11	s	CAPACITOR CERAMIC 100PF/50V
C542	1-163-251-11	s	CAPACITOR CERAMIC 100PF/50V
C543	1-163-251-11	s	CAPACITOR CERAMIC 100PF/50V
C544	1-163-251-11	s	CAPACITOR CERAMIC 100PF/50V
C545	1-163-251-11	s	CAPACITOR CERAMIC 100PF/50V
C546	1-163-251-11	s	CAPACITOR CERAMIC 100PF/50V
C547	1-163-251-11	s	CAPACITOR CERAMIC 100PF/50V
C548	1-163-251-11	s	CAPACITOR CERAMIC 100PF/50V
C549	1-163-251-11	s	CAPACITOR CERAMIC 100PF/50V
CN1	1-564-005-11	o	PIN, CONNECTOR 6P
CN2	1-774-869-11	o	HOUSING, CONNECTOR
CN108	1-766-431-21	o	HOUSING, CONNECTOR 30P
D100	8-719-028-74	s	DIODE NSQ03A04
D101	8-719-941-23	s	DIODE DA204U
D102	8-719-941-23	s	DIODE DA204U
D103	8-719-941-23	s	DIODE DA204U
D104	8-719-941-23	s	DIODE DA204U
D105	8-719-061-59	s	LED CL-200PG-C-TU
D106	8-719-061-58	s	LED CL-200Y-C-TU
D107	8-719-989-53	s	LED CL-200HR-C-TSL
D300	8-719-024-81	s	DIODE 1SS300-TE85L
D301	8-719-024-81	s	DIODE 1SS300-TE85L
D302	8-719-024-81	s	DIODE 1SS300-TE85L
D303	8-719-024-81	s	DIODE 1SS300-TE85L
D304	8-719-024-81	s	DIODE 1SS300-TE85L
D305	8-719-024-81	s	DIODE 1SS300-TE85L
D306	8-719-024-81	s	DIODE 1SS300-TE85L
D307	8-719-024-81	s	DIODE 1SS300-TE85L
D308	8-719-024-81	s	DIODE 1SS300-TE85L
D309	8-719-024-81	s	DIODE 1SS300-TE85L
D310	8-719-024-81	s	DIODE 1SS300-TE85L
D311	8-719-024-81	s	DIODE 1SS300-TE85L
D312	8-719-024-81	s	DIODE 1SS300-TE85L
D313	8-719-024-81	s	DIODE 1SS300-TE85L
D400	8-719-110-02	s	DIODE RD7.5ES-B1
D401	8-719-110-22	s	DIODE RD11ES-B2
D402	8-719-108-24	s	DIODE 1SS223
D403	8-719-110-22	s	DIODE RD11ES-B2
D404	8-719-110-22	s	DIODE RD11ES-B2

(KY-484 BOARD (for DSR-1800/P))

Ref. No. or Q'ty	Part No.	SP	Description
D405	8-719-051-03	s	DIODE EC11FS4-TE12L5
D406	8-719-110-04	s	DIODE RD7.5ES-B3
F100 ⚠	1-533-950-11	s	FUSE, CHIP
IC100	8-759-524-04	s	IC TC74VHC125FT (EL)
IC101	8-759-248-78	s	IC MB88102PFV-G-BND-ER
IC102 *1	8-759-824-39	s	UPD78013 FGC-R27-AB8
IC103	8-759-530-30	s	IC TC74VHCU04FT (EL)
IC104	8-759-196-97	s	IC TC7SH32FU (TE85R)
IC200	8-759-664-61	o	IC XC9536VQ44-DSR2000-JOG-V101
IC300	8-759-524-07	s	IC TC74VHC138FT(EL)
IC400	8-759-350-99	s	IC M66004M6FP200D
L100	1-424-643-11	s	COIL, CHOKE 10UH
L103	1-410-377-31	s	INDUCTOR,CHIP 4.7UH (3225)
L104	1-410-385-11	s	INDUCTOR,CHIP 22UH (3225)
L400	1-412-963-11	s	INDUCTOR 100UH (2520)
L401	1-406-824-11	s	COIL, CHOKE 22UH
ND400	1-517-922-11	o	INDICATOR TUBE, FLUORESCENT
PS100 ⚠	1-576-123-21	s	CIRCUIT PROTECTOR 0.8A(IC LINK
Q100	8-729-230-49	s	TRANSISTOR 2SC2712-YG
Q101	8-729-028-91	s	TRANSISTOR DTA144EUA-T106
Q102	8-729-028-91	s	TRANSISTOR DTA144EUA-T106
Q103	8-729-427-70	s	TRANSISTOR XP4401
Q104	8-729-028-73	s	TRANSISTOR DTA114EUA-T106
Q105	8-729-028-73	s	TRANSISTOR DTA114EUA-T106
Q106	8-729-028-73	s	TRANSISTOR DTA114EUA-T106
Q107	8-729-028-73	s	TRANSISTOR DTA114EUA-T106
Q108	8-729-028-73	s	TRANSISTOR DTA114EUA-T106
Q109	8-729-028-73	s	TRANSISTOR DTA114EUA-T106
Q110	8-729-028-73	s	TRANSISTOR DTA114EUA-T106
Q111	8-729-140-63	s	TRANSISTOR 2SA1611-M5M6
Q112	8-729-028-73	s	TRANSISTOR DTA114EUA-T106
Q113	8-729-028-73	s	TRANSISTOR DTA114EUA-T106
Q114	8-729-028-73	s	TRANSISTOR DTA114EUA-T106
Q115	8-729-028-73	s	TRANSISTOR DTA114EUA-T106
Q116	8-729-028-73	s	TRANSISTOR DTA114EUA-T106
Q117	8-729-028-73	s	TRANSISTOR DTA114EUA-T106
Q300	8-729-028-81	s	TRANSISTOR DTA123JUA-T106
Q301	8-729-028-81	s	TRANSISTOR DTA123JUA-T106
Q302	8-729-028-81	s	TRANSISTOR DTA123JUA-T106
Q303	8-729-028-81	s	TRANSISTOR DTA123JUA-T106
Q304	8-729-028-81	s	TRANSISTOR DTA123JUA-T106
Q305	8-729-028-81	s	TRANSISTOR DTA123JUA-T106
Q306	8-729-028-81	s	TRANSISTOR DTA123JUA-T106
Q400	8-729-230-49	s	TRANSISTOR 2SC2712-YG
Q401	8-729-202-37	s	TRANSISTOR 2SC3303-Y
Q500	8-729-019-87	s	TRANSISTOR 2SC3392-6-TB
Q501	8-729-216-22	s	TRANSISTOR 2SA1162-G
Q502	8-729-019-87	s	TRANSISTOR 2SC3392-6-TB
Q503	8-729-216-22	s	TRANSISTOR 2SA1162-G
Q504	8-729-019-87	s	TRANSISTOR 2SC3392-6-TB
Q505	8-729-216-22	s	TRANSISTOR 2SA1162-G
Q506	8-729-019-87	s	TRANSISTOR 2SC3392-6-TB
Q507	8-729-216-22	s	TRANSISTOR 2SA1162-G
Q508	8-729-019-87	s	TRANSISTOR 2SC3392-6-TB
Q509	8-729-216-22	s	TRANSISTOR 2SA1162-G
Q510	8-729-019-87	s	TRANSISTOR 2SC3392-6-TB

(KY-484 BOARD (for DSR-1800/P))

Ref. No. or Q'ty	Part No.	SP	Description
Q511	8-729-216-22	s	TRANSISTOR 2SA1162-G
Q512	8-729-019-87	s	TRANSISTOR 2SC3392-6-TB
Q513	8-729-216-22	s	TRANSISTOR 2SA1162-G
Q514	8-729-019-87	s	TRANSISTOR 2SC3392-6-TB
Q515	8-729-216-22	s	TRANSISTOR 2SA1162-G
Q516	8-729-019-87	s	TRANSISTOR 2SC3392-6-TB
Q517	8-729-216-22	s	TRANSISTOR 2SA1162-G
Q518	8-729-019-87	s	TRANSISTOR 2SC3392-6-TB
Q519	8-729-216-22	s	TRANSISTOR 2SA1162-G
Q520	8-729-019-87	s	TRANSISTOR 2SC3392-6-TB
Q521	8-729-216-22	s	TRANSISTOR 2SA1162-G
Q522	8-729-019-87	s	TRANSISTOR 2SC3392-6-TB
Q523	8-729-216-22	s	TRANSISTOR 2SA1162-G
Q524	8-729-019-87	s	TRANSISTOR 2SC3392-6-TB
Q525	8-729-216-22	s	TRANSISTOR 2SA1162-G
Q526	8-729-019-87	s	TRANSISTOR 2SC3392-6-TB
Q527	8-729-216-22	s	TRANSISTOR 2SA1162-G
Q528	8-729-019-87	s	TRANSISTOR 2SC3392-6-TB
Q529	8-729-216-22	s	TRANSISTOR 2SA1162-G
Q530	8-729-019-87	s	TRANSISTOR 2SC3392-6-TB
Q531	8-729-216-22	s	TRANSISTOR 2SA1162-G
Q532	8-729-019-87	s	TRANSISTOR 2SC3392-6-TB
Q533	8-729-216-22	s	TRANSISTOR 2SA1162-G
Q534	8-729-019-87	s	TRANSISTOR 2SC3392-6-TB
Q535	8-729-216-22	s	TRANSISTOR 2SA1162-G
Q536	8-729-019-87	s	TRANSISTOR 2SC3392-6-TB
Q537	8-729-216-22	s	TRANSISTOR 2SA1162-G
Q538	8-729-019-87	s	TRANSISTOR 2SC3392-6-TB
Q539	8-729-216-22	s	TRANSISTOR 2SA1162-G
Q540	8-729-019-87	s	TRANSISTOR 2SC3392-6-TB
Q541	8-729-216-22	s	TRANSISTOR 2SA1162-G
Q542	8-729-019-87	s	TRANSISTOR 2SC3392-6-TB
Q543	8-729-216-22	s	TRANSISTOR 2SA1162-G
Q544	8-729-019-87	s	TRANSISTOR 2SC3392-6-TB
Q545	8-729-216-22	s	TRANSISTOR 2SA1162-G
Q546	8-729-019-87	s	TRANSISTOR 2SC3392-6-TB
Q547	8-729-216-22	s	TRANSISTOR 2SA1162-G
Q548	8-729-019-87	s	TRANSISTOR 2SC3392-6-TB
Q549	8-729-216-22	s	TRANSISTOR 2SA1162-G
Q550	8-729-019-87	s	TRANSISTOR 2SC3392-6-TB
Q551	8-729-216-22	s	TRANSISTOR 2SA1162-G
Q552	8-729-019-87	s	TRANSISTOR 2SC3392-6-TB
Q553	8-729-216-22	s	TRANSISTOR 2SA1162-G
Q554	8-729-019-87	s	TRANSISTOR 2SC3392-6-TB
Q555	8-729-216-22	s	TRANSISTOR 2SA1162-G
Q556	8-729-019-87	s	TRANSISTOR 2SC3392-6-TB
Q557	8-729-216-22	s	TRANSISTOR 2SA1162-G
Q558	8-729-019-87	s	TRANSISTOR 2SC3392-6-TB
Q559	8-729-216-22	s	TRANSISTOR 2SA1162-G
Q560	8-729-019-87	s	TRANSISTOR 2SC3392-6-TB
Q561	8-729-216-22	s	TRANSISTOR 2SA1162-G
Q562	8-729-019-87	s	TRANSISTOR 2SC3392-6-TB
Q563	8-729-216-22	s	TRANSISTOR 2SA1162-G
Q564	8-729-019-87	s	TRANSISTOR 2SC3392-6-TB
Q565	8-729-216-22	s	TRANSISTOR 2SA1162-G
Q566	8-729-019-87	s	TRANSISTOR 2SC3392-6-TB
Q567	8-729-216-22	s	TRANSISTOR 2SA1162-G
Q568	8-729-019-87	s	TRANSISTOR 2SC3392-6-TB
Q569	8-729-216-22	s	TRANSISTOR 2SA1162-G

http://getMANUAL.com

(KY-484 BOARD (for DSR-1800/P))

Ref. No. or Q'ty	Part No.	SP	Description
Q570	8-729-019-87	s	TRANSISTOR 2SC3392-6-TB
Q571	8-729-216-22	s	TRANSISTOR 2SA1162-G
Q572	8-729-019-87	s	TRANSISTOR 2SC3392-6-TB
Q573	8-729-216-22	s	TRANSISTOR 2SA1162-G
Q574	8-729-019-87	s	TRANSISTOR 2SC3392-6-TB
Q575	8-729-216-22	s	TRANSISTOR 2SA1162-G
Q576	8-729-019-87	s	TRANSISTOR 2SC3392-6-TB
Q577	8-729-216-22	s	TRANSISTOR 2SA1162-G
Q578	8-729-019-87	s	TRANSISTOR 2SC3392-6-TB
Q579	8-729-216-22	s	TRANSISTOR 2SA1162-G
Q580	8-729-019-87	s	TRANSISTOR 2SC3392-6-TB
Q581	8-729-216-22	s	TRANSISTOR 2SA1162-G
Q582	8-729-019-87	s	TRANSISTOR 2SC3392-6-TB
Q583	8-729-216-22	s	TRANSISTOR 2SA1162-G
Q584	8-729-019-87	s	TRANSISTOR 2SC3392-6-TB
Q585	8-729-216-22	s	TRANSISTOR 2SA1162-G
Q586	8-729-019-87	s	TRANSISTOR 2SC3392-6-TB
Q587	8-729-216-22	s	TRANSISTOR 2SA1162-G
Q588	8-729-019-87	s	TRANSISTOR 2SC3392-6-TB
Q589	8-729-216-22	s	TRANSISTOR 2SA1162-G
Q590	8-729-019-87	s	TRANSISTOR 2SC3392-6-TB
Q591	8-729-216-22	s	TRANSISTOR 2SA1162-G
Q592	8-729-019-87	s	TRANSISTOR 2SC3392-6-TB
Q593	8-729-216-22	s	TRANSISTOR 2SA1162-G
Q594	8-729-019-87	s	TRANSISTOR 2SC3392-6-TB
Q595	8-729-216-22	s	TRANSISTOR 2SA1162-G
Q596	8-729-019-87	s	TRANSISTOR 2SC3392-6-TB
Q597	8-729-216-22	s	TRANSISTOR 2SA1162-G
Q598	8-729-019-87	s	TRANSISTOR 2SC3392-6-TB
Q599	8-729-216-22	s	TRANSISTOR 2SA1162-G
R101	1-216-089-00	s	RESISTOR CHIP 47K 1/10W(2012)
R102	1-216-089-00	s	RESISTOR CHIP 47K 1/10W(2012)
R103	1-216-089-00	s	RESISTOR CHIP 47K 1/10W(2012)
R104	1-216-089-00	s	RESISTOR CHIP 47K 1/10W(2012)
R105	1-216-089-00	s	RESISTOR CHIP 47K 1/10W(2012)
R106	1-216-089-00	s	RESISTOR CHIP 47K 1/10W(2012)
R107	1-216-089-00	s	RESISTOR CHIP 47K 1/10W(2012)
R108	1-216-057-00	s	RESISTOR CHIP 2.2K 1/10W(2012)
R109	1-216-025-00	s	RESISTOR,CHIP 100 1/10W(2012)
R110	1-216-025-00	s	RESISTOR,CHIP 100 1/10W(2012)
R111	1-216-025-00	s	RESISTOR,CHIP 100 1/10W(2012)
R112	1-216-025-00	s	RESISTOR,CHIP 100 1/10W(2012)
R113	1-216-049-11	s	RESISTOR, CHIP 1K 1/10W(2012)
R114	1-216-057-00	s	RESISTOR CHIP 2.2K 1/10W(2012)
R115	1-216-025-00	s	RESISTOR,CHIP 100 1/10W(2012)
R117	1-216-089-00	s	RESISTOR CHIP 47K 1/10W(2012)
R118	1-216-089-00	s	RESISTOR CHIP 47K 1/10W(2012)
R119	1-216-025-00	s	RESISTOR,CHIP 100 1/10W(2012)
R120	1-216-025-00	s	RESISTOR,CHIP 100 1/10W(2012)
R121	1-216-025-00	s	RESISTOR,CHIP 100 1/10W(2012)
R122	1-216-025-00	s	RESISTOR,CHIP 100 1/10W(2012)
R124	1-216-061-00	s	RESISTOR CHIP 3.3K 1/10W(2012)
R125	1-216-061-00	s	RESISTOR CHIP 3.3K 1/10W(2012)
R126	1-216-053-00	s	RESISTOR CHIP 1.5K 1/10W(2012)
R127	1-216-065-91	s	RESISTOR,CHIP 4.7K 1/10W(2012)
R128	1-216-304-11	s	RESISTOR,CHIP 3,3 1/10W(2012)
R129	1-216-067-00	s	RESISTOR,CHIP 5.6K 1/10W(2012)
R130	1-216-057-00	s	RESISTOR CHIP 2.2K 1/10W(2012)
R131	1-216-121-00	s	RESISTOR CHIP 1M 1/10W(2012)

(KY-484 BOARD (for DSR-1800/P))

Ref. No. or Q'ty	Part No.	SP	Description
R132	1-216-033-00	s	RESISTOR,CHIP 220 1/10W(2012)
R133	1-216-061-00	s	RESISTOR CHIP 3.3K 1/10W(2012)
R134	1-216-027-00	s	RESISTOR,CHIP 120 1/10W(2012)
R135	1-216-027-00	s	RESISTOR,CHIP 120 1/10W(2012)
R136	1-216-027-00	s	RESISTOR,CHIP 120 1/10W(2012)
R137	1-216-027-00	s	RESISTOR,CHIP 120 1/10W(2012)
R138	1-216-027-00	s	RESISTOR,CHIP 120 1/10W(2012)
R139	1-216-027-00	s	RESISTOR,CHIP 120 1/10W(2012)
R140	1-216-027-00	s	RESISTOR,CHIP 120 1/10W(2012)
R141	1-216-089-00	s	RESISTOR CHIP 47K 1/10W(2012)
R142	1-216-025-00	s	RESISTOR,CHIP 100 1/10W(2012)
R145	1-216-027-00	s	RESISTOR,CHIP 120 1/10W(2012)
R146	1-216-027-00	s	RESISTOR,CHIP 120 1/10W(2012)
R147	1-216-049-11	s	RESISTOR, CHIP 1K 1/10W(2012)
R148	1-216-037-00	s	RESISTOR,CHIP 330 1/10W(2012)
R149	1-216-037-00	s	RESISTOR,CHIP 330 1/10W(2012)
R150	1-216-037-00	s	RESISTOR,CHIP 330 1/10W(2012)
R151	1-216-089-00	s	RESISTOR CHIP 47K 1/10W(2012)
R152	1-216-089-00	s	RESISTOR CHIP 47K 1/10W(2012)
R153	1-216-025-00	s	RESISTOR,CHIP 100 1/10W(2012)
R154	1-216-089-00	s	RESISTOR CHIP 47K 1/10W(2012)
R155	1-216-025-00	s	RESISTOR,CHIP 100 1/10W(2012)
R156	1-216-089-00	s	RESISTOR CHIP 47K 1/10W(2012)
R157	1-216-025-00	s	RESISTOR,CHIP 100 1/10W(2012)
R159	1-216-089-00	s	RESISTOR CHIP 47K 1/10W(2012)
R201	1-216-049-11	s	RESISTOR, CHIP 1K 1/10W(2012)
R401	1-216-049-11	s	RESISTOR, CHIP 1K 1/10W(2012)
R402	1-216-049-11	s	RESISTOR, CHIP 1K 1/10W(2012)
R403	1-216-025-00	s	RESISTOR,CHIP 100 1/10W(2012)
R404	1-216-049-11	s	RESISTOR, CHIP 1K 1/10W(2012)
R405	1-216-033-00	s	RESISTOR,CHIP 220 1/10W(2012)
R406	1-208-823-11	s	RESISTOR,CHIP 51K 1/10W (2125)
R407	1-216-093-00	s	RESISTOR, CHIP 68K 1/10W(2012)
R500	1-216-025-00	s	RESISTOR,CHIP 100 1/10W(2012)
R501	1-216-025-00	s	RESISTOR,CHIP 100 1/10W(2012)
R502	1-216-025-00	s	RESISTOR,CHIP 100 1/10W(2012)
R503	1-216-025-00	s	RESISTOR,CHIP 100 1/10W(2012)
R504	1-216-025-00	s	RESISTOR,CHIP 100 1/10W(2012)
R505	1-216-025-00	s	RESISTOR,CHIP 100 1/10W(2012)
R506	1-216-025-00	s	RESISTOR,CHIP 100 1/10W(2012)
R507	1-216-025-00	s	RESISTOR,CHIP 100 1/10W(2012)
R508	1-216-025-00	s	RESISTOR,CHIP 100 1/10W(2012)
R509	1-216-025-00	s	RESISTOR,CHIP 100 1/10W(2012)
R510	1-216-025-00	s	RESISTOR,CHIP 100 1/10W(2012)
R511	1-216-025-00	s	RESISTOR,CHIP 100 1/10W(2012)
R512	1-216-025-00	s	RESISTOR,CHIP 100 1/10W(2012)
R513	1-216-025-00	s	RESISTOR,CHIP 100 1/10W(2012)
R514	1-216-025-00	s	RESISTOR,CHIP 100 1/10W(2012)
R515	1-216-025-00	s	RESISTOR,CHIP 100 1/10W(2012)
R516	1-216-025-00	s	RESISTOR,CHIP 100 1/10W(2012)
R517	1-216-025-00	s	RESISTOR,CHIP 100 1/10W(2012)
R518	1-216-025-00	s	RESISTOR,CHIP 100 1/10W(2012)
R519	1-216-025-00	s	RESISTOR,CHIP 100 1/10W(2012)
R520	1-216-025-00	s	RESISTOR,CHIP 100 1/10W(2012)
R521	1-216-025-00	s	RESISTOR,CHIP 100 1/10W(2012)
R522	1-216-025-00	s	RESISTOR,CHIP 100 1/10W(2012)
R523	1-216-025-00	s	RESISTOR,CHIP 100 1/10W(2012)
R524	1-216-025-00	s	RESISTOR,CHIP 100 1/10W(2012)
R525	1-216-025-00	s	RESISTOR,CHIP 100 1/10W(2012)

(KY-484 BOARD (for DSR-1800/P))

Ref. No. or Q'ty	Part No.	SP	Description
R526	1-216-025-00	s	RESISTOR,CHIP 100 1/10W(2012)
R527	1-216-025-00	s	RESISTOR,CHIP 100 1/10W(2012)
R528	1-216-025-00	s	RESISTOR,CHIP 100 1/10W(2012)
R529	1-216-025-00	s	RESISTOR,CHIP 100 1/10W(2012)
R530	1-216-025-00	s	RESISTOR,CHIP 100 1/10W(2012)
R531	1-216-025-00	s	RESISTOR,CHIP 100 1/10W(2012)
R532	1-216-025-00	s	RESISTOR,CHIP 100 1/10W(2012)
R533	1-216-025-00	s	RESISTOR,CHIP 100 1/10W(2012)
R534	1-216-025-00	s	RESISTOR,CHIP 100 1/10W(2012)
R535	1-216-025-00	s	RESISTOR,CHIP 100 1/10W(2012)
R536	1-216-025-00	s	RESISTOR,CHIP 100 1/10W(2012)
R537	1-216-025-00	s	RESISTOR,CHIP 100 1/10W(2012)
R538	1-216-025-00	s	RESISTOR,CHIP 100 1/10W(2012)
R539	1-216-025-00	s	RESISTOR,CHIP 100 1/10W(2012)
R540	1-216-025-00	s	RESISTOR,CHIP 100 1/10W(2012)
R541	1-216-025-00	s	RESISTOR,CHIP 100 1/10W(2012)
R542	1-216-025-00	s	RESISTOR,CHIP 100 1/10W(2012)
R543	1-216-025-00	s	RESISTOR,CHIP 100 1/10W(2012)
R544	1-216-025-00	s	RESISTOR,CHIP 100 1/10W(2012)
R545	1-216-025-00	s	RESISTOR,CHIP 100 1/10W(2012)
R546	1-216-025-00	s	RESISTOR,CHIP 100 1/10W(2012)
R547	1-216-025-00	s	RESISTOR,CHIP 100 1/10W(2012)
R548	1-216-025-00	s	RESISTOR,CHIP 100 1/10W(2012)
R549	1-216-025-00	s	RESISTOR,CHIP 100 1/10W(2012)
RB100	1-239-389-11	s	RESISTOR,NETWORK 47K (1608)
RB101	1-239-412-11	s	NETWORK, RESISTOR 100 (1608)
RB102	1-239-412-11	s	NETWORK, RESISTOR 100 (1608)
RB103	1-236-904-11	s	RESISTOR NETWORK 1K (1608)
RB200	1-236-904-11	s	RESISTOR NETWORK 1K (1608)
RB201	1-236-908-11	s	RESISTOR,NETWORK 10K (3216)
RB300	1-239-389-11	s	RESISTOR,NETWORK 47K (1608)
RV100	1-241-874-11	s	RES, VAR, CARBON 10K
RV101	1-241-874-11	s	RES, VAR, CARBON 10K
RV102	1-241-874-11	s	RES, VAR, CARBON 10K
RV103	1-241-874-11	s	RES, VAR, CARBON 10K
RV104	1-237-695-11	s	RESISTOR,VAR,CARBON 5K
RV105	1-237-695-11	s	RESISTOR,VAR,CARBON 5K
S101	1-692-892-11	s	SWITCH, TACTILE (WITH LIGHT)
S102	1-692-892-21	s	SWITCH, TACTILE (WITH LIGHT)
S103	1-692-890-41	s	SWITCH, TACTILE (WITH LIGHT)
S104	1-692-890-31	s	SWITCH, TACTILE (WITH LIGHT)
S105	1-692-890-21	s	SWITCH, TACTILE (WITH LIGHT)
S106	1-692-891-21	s	SWITCH, TACTILE (WITH LIGHT)
S107	1-692-890-11	s	SWITCH, TACTILE
S108	1-572-827-11	s	SWITCH, PUSH
S109	1-572-827-11	s	SWITCH, PUSH
S110	1-572-827-11	s	SWITCH, PUSH
S300	1-571-977-11	s	SWITCH,TACTIL
S301	1-571-977-11	s	SWITCH,TACTIL
S302	1-571-977-11	s	SWITCH,TACTIL
S303	1-571-977-11	s	SWITCH,TACTIL
S305	1-771-122-11	s	SWITCH, SLIDE
S306	1-571-427-11	s	SWITCH,SLIDE (1-1-2)
S307	1-571-977-11	s	SWITCH,TACTIL
S308	1-571-977-11	s	SWITCH,TACTIL
S309	1-571-977-11	s	SWITCH,TACTIL
S310	1-571-977-11	s	SWITCH,TACTIL

(KY-484 BOARD (for DSR-1800/P))

Ref. No. or Q'ty	Part No.	SP	Description
S311	1-571-977-11	s	SWITCH,TACTIL
S312	1-571-977-11	s	SWITCH,TACTIL
S313	1-571-977-11	s	SWITCH,TACTIL
S314	1-571-977-11	s	SWITCH,TACTIL
S315	1-571-977-11	s	SWITCH,TACTIL
T400	1-435-186-11	s	TRANSFORMER, CONVERTER
X100	1-781-174-21	s	VIBRATOR, CERAMIC (10.000MHZ)

KY-484A BOARD (for DSR-1600/P)

---

*1: Lot No.094 and higher

Ref. No. or Q'ty	Part No.	SP	Description
1pc	A-8326-512-A	o	MOUNTED CIRCUIT BOARD, KY-484A
C100	1-163-038-00	s	CAPACITOR, CERAMIC 0.1MF/25V
C101	1-126-396-11	s	CAPACITOR,ELECT 47MF/16V(CHIP)
C102	1-163-038-00	s	CAPACITOR, CERAMIC 0.1MF/25V
C103	1-126-396-11	s	CAPACITOR,ELECT 47MF/16V(CHIP)
C104	1-163-038-00	s	CAPACITOR, CERAMIC 0.1MF/25V
C105	1-163-009-11	s	CAPACITOR,CERAMIC 1000PF/50V
C106	1-163-037-11	s	CAPACITOR,CHIP CERAMIC 0.022MF
C107	1-126-396-11	s	CAPACITOR,ELECT 47MF/16V(CHIP)
C108	1-163-038-00	s	CAPACITOR, CERAMIC 0.1MF/25V
C109	1-163-133-00	s	CAPACITOR,CHIP CERAMIC 470PF
C111	1-126-393-11	s	CAPACITOR ELECT 33MF/10V(CHIP)
C112	1-165-319-11	s	CAPACITOR,CERAMIC 0.1MF/50V
C113	1-165-319-11	s	CAPACITOR,CERAMIC 0.1MF/50V
C114	1-163-038-00	s	CAPACITOR, CERAMIC 0.1MF/25V
C118	1-163-038-00	s	CAPACITOR, CERAMIC 0.1MF/25V
C119	1-165-319-11	s	CAPACITOR,CERAMIC 0.1MF/50V
C120	1-165-319-11	s	CAPACITOR,CERAMIC 0.1MF/50V
C200	1-163-257-11	s	CAPACITOR CERAMIC 180PF/50V
C201	1-163-257-11	s	CAPACITOR CERAMIC 180PF/50V
C202	1-163-257-11	s	CAPACITOR CERAMIC 180PF/50V
C203	1-163-257-11	s	CAPACITOR CERAMIC 180PF/50V
C204	1-163-038-00	s	CAPACITOR, CERAMIC 0.1MF/25V
C205	1-163-038-00	s	CAPACITOR, CERAMIC 0.1MF/25V
C206	1-163-038-00	s	CAPACITOR, CERAMIC 0.1MF/25V
C207	1-163-133-00	s	CAPACITOR,CHIP CERAMIC 470PF
C300	1-163-038-00	s	CAPACITOR, CERAMIC 0.1MF/25V
C400	1-163-133-00	s	CAPACITOR,CHIP CERAMIC 470PF
C401	1-126-393-11	s	CAPACITOR ELECT 33MF/10V(CHIP)
C402	1-165-319-11	s	CAPACITOR,CERAMIC 0.1MF/50V
C403	1-165-319-11	s	CAPACITOR,CERAMIC 0.1MF/50V
C404	1-128-399-11	s	CAPACITOR ELECT 330MF/16V(CHIP
C405	1-163-021-91	s	CAPACITOR, CERAMIC 0.01MF/50V
C406	1-128-405-11	s	CAPACITOR.ELECT 22MF/50V(CHIP)
C500	1-163-251-11	s	CAPACITOR CERAMIC 100PF/50V
C501	1-163-251-11	s	CAPACITOR CERAMIC 100PF/50V
C502	1-163-251-11	s	CAPACITOR CERAMIC 100PF/50V
C503	1-163-251-11	s	CAPACITOR CERAMIC 100PF/50V
C504	1-163-251-11	s	CAPACITOR CERAMIC 100PF/50V
C505	1-163-251-11	s	CAPACITOR CERAMIC 100PF/50V
C506	1-163-251-11	s	CAPACITOR CERAMIC 100PF/50V
C507	1-163-251-11	s	CAPACITOR CERAMIC 100PF/50V
C508	1-163-251-11	s	CAPACITOR CERAMIC 100PF/50V
C509	1-163-251-11	s	CAPACITOR CERAMIC 100PF/50V
C510	1-163-251-11	s	CAPACITOR CERAMIC 100PF/50V
C511	1-163-251-11	s	CAPACITOR CERAMIC 100PF/50V
C512	1-163-251-11	s	CAPACITOR CERAMIC 100PF/50V
C513	1-163-251-11	s	CAPACITOR CERAMIC 100PF/50V
C514	1-163-251-11	s	CAPACITOR CERAMIC 100PF/50V
C515	1-163-251-11	s	CAPACITOR CERAMIC 100PF/50V
C516	1-163-251-11	s	CAPACITOR CERAMIC 100PF/50V
C517	1-163-251-11	s	CAPACITOR CERAMIC 100PF/50V
C518	1-163-251-11	s	CAPACITOR CERAMIC 100PF/50V
C519	1-163-251-11	s	CAPACITOR CERAMIC 100PF/50V
C520	1-163-251-11	s	CAPACITOR CERAMIC 100PF/50V
C521	1-163-251-11	s	CAPACITOR CERAMIC 100PF/50V
C522	1-163-251-11	s	CAPACITOR CERAMIC 100PF/50V

(KY-484A BOARD (for DSR-1600/P))

Ref. No. or Q'ty	Part No.	SP	Description
C523	1-163-251-11	s	CAPACITOR CERAMIC 100PF/50V
C524	1-163-251-11	s	CAPACITOR CERAMIC 100PF/50V
C525	1-163-251-11	s	CAPACITOR CERAMIC 100PF/50V
C526	1-163-251-11	s	CAPACITOR CERAMIC 100PF/50V
C527	1-163-251-11	s	CAPACITOR CERAMIC 100PF/50V
C528	1-163-251-11	s	CAPACITOR CERAMIC 100PF/50V
C529	1-163-251-11	s	CAPACITOR CERAMIC 100PF/50V
C530	1-163-251-11	s	CAPACITOR CERAMIC 100PF/50V
C531	1-163-251-11	s	CAPACITOR CERAMIC 100PF/50V
C532	1-163-251-11	s	CAPACITOR CERAMIC 100PF/50V
C533	1-163-251-11	s	CAPACITOR CERAMIC 100PF/50V
C534	1-163-251-11	s	CAPACITOR CERAMIC 100PF/50V
C535	1-163-251-11	s	CAPACITOR CERAMIC 100PF/50V
C536	1-163-251-11	s	CAPACITOR CERAMIC 100PF/50V
C537	1-163-251-11	s	CAPACITOR CERAMIC 100PF/50V
C538	1-163-251-11	s	CAPACITOR CERAMIC 100PF/50V
C539	1-163-251-11	s	CAPACITOR CERAMIC 100PF/50V
C540	1-163-251-11	s	CAPACITOR CERAMIC 100PF/50V
C541	1-163-251-11	s	CAPACITOR CERAMIC 100PF/50V
C542	1-163-251-11	s	CAPACITOR CERAMIC 100PF/50V
C543	1-163-251-11	s	CAPACITOR CERAMIC 100PF/50V
C544	1-163-251-11	s	CAPACITOR CERAMIC 100PF/50V
C545	1-163-251-11	s	CAPACITOR CERAMIC 100PF/50V
C546	1-163-251-11	s	CAPACITOR CERAMIC 100PF/50V
C547	1-163-251-11	s	CAPACITOR CERAMIC 100PF/50V
C548	1-163-251-11	s	CAPACITOR CERAMIC 100PF/50V
C549	1-163-251-11	s	CAPACITOR CERAMIC 100PF/50V
CN1	1-564-005-11	o	PIN, CONNECTOR 6P
CN2	1-774-869-11	o	HOUSING, CONNECTOR
CN108	1-766-431-21	o	HOUSING, CONNECTOR 30P
D100	8-719-028-74	s	DIODE NSQ03A04
D101	8-719-941-23	s	DIODE DA204U
D102	8-719-941-23	s	DIODE DA204U
D103	8-719-941-23	s	DIODE DA204U
D104	8-719-941-23	s	DIODE DA204U
D105	8-719-061-59	s	LED CL-200PG-C-TU
D106	8-719-061-58	s	LED CL-200Y-C-TU
D107	8-719-989-53	s	LED CL-200HR-C-TSL
D300	8-719-024-81	s	DIODE 1SS300-TE85L
D301	8-719-024-81	s	DIODE 1SS300-TE85L
D303	8-719-024-81	s	DIODE 1SS300-TE85L
D304	8-719-024-81	s	DIODE 1SS300-TE85L
D305	8-719-024-81	s	DIODE 1SS300-TE85L
D306	8-719-024-81	s	DIODE 1SS300-TE85L
D307	8-719-024-81	s	DIODE 1SS300-TE85L
D308	8-719-024-81	s	DIODE 1SS300-TE85L
D310	8-719-024-81	s	DIODE 1SS300-TE85L
D311	8-719-024-81	s	DIODE 1SS300-TE85L
D312	8-719-024-81	s	DIODE 1SS300-TE85L
D313	8-719-024-81	s	DIODE 1SS300-TE85L
D400	8-719-110-02	s	DIODE RD7.5ES-B1
D401	8-719-110-22	s	DIODE RD11ES-B2
D402	8-719-108-24	s	DIODE 1SS223
D403	8-719-110-22	s	DIODE RD11ES-B2
D404	8-719-110-22	s	DIODE RD11ES-B2
D405	8-719-051-03	s	DIODE EC11FS4-TE12L5
D406	8-719-110-04	s	DIODE RD7.5ES-B3

(KY-484A BOARD (for DSR-1600/P))

Ref. No. or Q'ty		Part No.	SP	Description
F100	⚠	1-533-950-11	s	FUSE, CHIP
IC100		8-759-524-04	s	IC TC74VHC125FT (EL)
IC102	*1	8-759-824-39	s	UPD78013FYGC-R27-AB8
IC103		8-759-530-30	s	IC TC74VHCU04FT (EL)
IC104		8-759-196-97	s	IC TC7SH32FU (TE85R)
IC200		8-759-664-61	o	IC XC9536VQ44-DSR2000-JOG-V101
IC300		8-759-524-07	s	IC TC74VHC138FT(EL)
IC400		8-759-350-99	s	IC M66004M6FP200D
L100		1-424-643-11	s	COIL, CHOKE 10UH
L103		1-410-377-31	s	INDUCTOR,CHIP 4.7UH (3225)
L104		1-410-385-11	s	INDUCTOR,CHIP 22UH (3225)
L400		1-412-963-11	s	INDUCTOR 100UH (2520)
L401		1-406-824-11	s	COIL, CHOKE 22UH
ND400		1-517-922-11	o	INDICATOR TUBE, FLUORESCENT
PS100	⚠	1-576-123-21	s	CIRCUIT PROTECTOR 0.8A(IC LINK
Q100		8-729-230-49	s	TRANSISTOR 2SC2712-YG
Q101		8-729-028-91	s	TRANSISTOR DTA144EUA-T106
Q102		8-729-028-91	s	TRANSISTOR DTA144EUA-T106
Q103		8-729-427-70	s	TRANSISTOR XP4401
Q104		8-729-028-73	s	TRANSISTOR DTA114EUA-T106
Q105		8-729-028-73	s	TRANSISTOR DTA114EUA-T106
Q106		8-729-028-73	s	TRANSISTOR DTA114EUA-T106
Q107		8-729-028-73	s	TRANSISTOR DTA114EUA-T106
Q108		8-729-028-73	s	TRANSISTOR DTA114EUA-T106
Q110		8-729-028-73	s	TRANSISTOR DTA114EUA-T106
Q111		8-729-140-63	s	TRANSISTOR 2SA1611-M5M6
Q112		8-729-028-73	s	TRANSISTOR DTA114EUA-T106
Q113		8-729-028-73	s	TRANSISTOR DTA114EUA-T106
Q114		8-729-028-73	s	TRANSISTOR DTA114EUA-T106
Q115		8-729-028-73	s	TRANSISTOR DTA114EUA-T106
Q116		8-729-028-73	s	TRANSISTOR DTA114EUA-T106
Q117		8-729-028-73	s	TRANSISTOR DTA114EUA-T106
Q300		8-729-028-81	s	TRANSISTOR DTA123JUA-T106
Q301		8-729-028-81	s	TRANSISTOR DTA123JUA-T106
Q302		8-729-028-81	s	TRANSISTOR DTA123JUA-T106
Q303		8-729-028-81	s	TRANSISTOR DTA123JUA-T106
Q304		8-729-028-81	s	TRANSISTOR DTA123JUA-T106
Q305		8-729-028-81	s	TRANSISTOR DTA123JUA-T106
Q306		8-729-028-81	s	TRANSISTOR DTA123JUA-T106
Q400		8-729-230-49	s	TRANSISTOR 2SC2712-YG
Q401		8-729-202-37	s	TRANSISTOR 2SC3303-Y
Q500		8-729-019-87	s	TRANSISTOR 2SC3392-6-TB
Q501		8-729-216-22	s	TRANSISTOR 2SA1162-G
Q502		8-729-019-87	s	TRANSISTOR 2SC3392-6-TB
Q503		8-729-216-22	s	TRANSISTOR 2SA1162-G
Q504		8-729-019-87	s	TRANSISTOR 2SC3392-6-TB
Q505		8-729-216-22	s	TRANSISTOR 2SA1162-G
Q506		8-729-019-87	s	TRANSISTOR 2SC3392-6-TB
Q507		8-729-216-22	s	TRANSISTOR 2SA1162-G
Q508		8-729-019-87	s	TRANSISTOR 2SC3392-6-TB
Q509		8-729-216-22	s	TRANSISTOR 2SA1162-G
Q510		8-729-019-87	s	TRANSISTOR 2SC3392-6-TB
Q511		8-729-216-22	s	TRANSISTOR 2SA1162-G
Q512		8-729-019-87	s	TRANSISTOR 2SC3392-6-TB
Q513		8-729-216-22	s	TRANSISTOR 2SA1162-G
Q514		8-729-019-87	s	TRANSISTOR 2SC3392-6-TB

(KY-484A BOARD (for DSR-1600/P))

Ref. No. or Q'ty	Part No.	SP	Description
Q515	8-729-216-22	s	TRANSISTOR 2SA1162-G
Q516	8-729-019-87	s	TRANSISTOR 2SC3392-6-TB
Q517	8-729-216-22	s	TRANSISTOR 2SA1162-G
Q518	8-729-019-87	s	TRANSISTOR 2SC3392-6-TB
Q519	8-729-216-22	s	TRANSISTOR 2SA1162-G
Q520	8-729-019-87	s	TRANSISTOR 2SC3392-6-TB
Q521	8-729-216-22	s	TRANSISTOR 2SA1162-G
Q522	8-729-019-87	s	TRANSISTOR 2SC3392-6-TB
Q523	8-729-216-22	s	TRANSISTOR 2SA1162-G
Q524	8-729-019-87	s	TRANSISTOR 2SC3392-6-TB
Q525	8-729-216-22	s	TRANSISTOR 2SA1162-G
Q526	8-729-019-87	s	TRANSISTOR 2SC3392-6-TB
Q527	8-729-216-22	s	TRANSISTOR 2SA1162-G
Q528	8-729-019-87	s	TRANSISTOR 2SC3392-6-TB
Q529	8-729-216-22	s	TRANSISTOR 2SA1162-G
Q530	8-729-019-87	s	TRANSISTOR 2SC3392-6-TB
Q531	8-729-216-22	s	TRANSISTOR 2SA1162-G
Q532	8-729-019-87	s	TRANSISTOR 2SC3392-6-TB
Q533	8-729-216-22	s	TRANSISTOR 2SA1162-G
Q534	8-729-019-87	s	TRANSISTOR 2SC3392-6-TB
Q535	8-729-216-22	s	TRANSISTOR 2SA1162-G
Q536	8-729-019-87	s	TRANSISTOR 2SC3392-6-TB
Q537	8-729-216-22	s	TRANSISTOR 2SA1162-G
Q538	8-729-019-87	s	TRANSISTOR 2SC3392-6-TB
Q539	8-729-216-22	s	TRANSISTOR 2SA1162-G
Q540	8-729-019-87	s	TRANSISTOR 2SC3392-6-TB
Q541	8-729-216-22	s	TRANSISTOR 2SA1162-G
Q542	8-729-019-87	s	TRANSISTOR 2SC3392-6-TB
Q543	8-729-216-22	s	TRANSISTOR 2SA1162-G
Q544	8-729-019-87	s	TRANSISTOR 2SC3392-6-TB
Q545	8-729-216-22	s	TRANSISTOR 2SA1162-G
Q546	8-729-019-87	s	TRANSISTOR 2SC3392-6-TB
Q547	8-729-216-22	s	TRANSISTOR 2SA1162-G
Q548	8-729-019-87	s	TRANSISTOR 2SC3392-6-TB
Q549	8-729-216-22	s	TRANSISTOR 2SA1162-G
Q550	8-729-019-87	s	TRANSISTOR 2SC3392-6-TB
Q551	8-729-216-22	s	TRANSISTOR 2SA1162-G
Q552	8-729-019-87	s	TRANSISTOR 2SC3392-6-TB
Q553	8-729-216-22	s	TRANSISTOR 2SA1162-G
Q554	8-729-019-87	s	TRANSISTOR 2SC3392-6-TB
Q555	8-729-216-22	s	TRANSISTOR 2SA1162-G
Q556	8-729-019-87	s	TRANSISTOR 2SC3392-6-TB
Q557	8-729-216-22	s	TRANSISTOR 2SA1162-G
Q558	8-729-019-87	s	TRANSISTOR 2SC3392-6-TB
Q559	8-729-216-22	s	TRANSISTOR 2SA1162-G
Q560	8-729-019-87	s	TRANSISTOR 2SC3392-6-TB
Q561	8-729-216-22	s	TRANSISTOR 2SA1162-G
Q562	8-729-019-87	s	TRANSISTOR 2SC3392-6-TB
Q563	8-729-216-22	s	TRANSISTOR 2SA1162-G
Q564	8-729-019-87	s	TRANSISTOR 2SC3392-6-TB
Q565	8-729-216-22	s	TRANSISTOR 2SA1162-G
Q566	8-729-019-87	s	TRANSISTOR 2SC3392-6-TB
Q567	8-729-216-22	s	TRANSISTOR 2SA1162-G
Q568	8-729-019-87	s	TRANSISTOR 2SC3392-6-TB
Q569	8-729-216-22	s	TRANSISTOR 2SA1162-G
Q570	8-729-019-87	s	TRANSISTOR 2SC3392-6-TB
Q571	8-729-216-22	s	TRANSISTOR 2SA1162-G
Q572	8-729-019-87	s	TRANSISTOR 2SC3392-6-TB
Q573	8-729-216-22	s	TRANSISTOR 2SA1162-G

(KY-484A BOARD (for DSR-1600/P))

Ref. No. or Q'ty	Part No.	SP	Description
Q574	8-729-019-87	s	TRANSISTOR 2SC3392-6-TB
Q575	8-729-216-22	s	TRANSISTOR 2SA1162-G
Q576	8-729-019-87	s	TRANSISTOR 2SC3392-6-TB
Q577	8-729-216-22	s	TRANSISTOR 2SA1162-G
Q578	8-729-019-87	s	TRANSISTOR 2SC3392-6-TB
Q579	8-729-216-22	s	TRANSISTOR 2SA1162-G
Q580	8-729-019-87	s	TRANSISTOR 2SC3392-6-TB
Q581	8-729-216-22	s	TRANSISTOR 2SA1162-G
Q582	8-729-019-87	s	TRANSISTOR 2SC3392-6-TB
Q583	8-729-216-22	s	TRANSISTOR 2SA1162-G
Q584	8-729-019-87	s	TRANSISTOR 2SC3392-6-TB
Q585	8-729-216-22	s	TRANSISTOR 2SA1162-G
Q586	8-729-019-87	s	TRANSISTOR 2SC3392-6-TB
Q587	8-729-216-22	s	TRANSISTOR 2SA1162-G
Q588	8-729-019-87	s	TRANSISTOR 2SC3392-6-TB
Q589	8-729-216-22	s	TRANSISTOR 2SA1162-G
Q590	8-729-019-87	s	TRANSISTOR 2SC3392-6-TB
Q591	8-729-216-22	s	TRANSISTOR 2SA1162-G
Q592	8-729-019-87	s	TRANSISTOR 2SC3392-6-TB
Q593	8-729-216-22	s	TRANSISTOR 2SA1162-G
Q594	8-729-019-87	s	TRANSISTOR 2SC3392-6-TB
Q595	8-729-216-22	s	TRANSISTOR 2SA1162-G
Q596	8-729-019-87	s	TRANSISTOR 2SC3392-6-TB
Q597	8-729-216-22	s	TRANSISTOR 2SA1162-G
Q598	8-729-019-87	s	TRANSISTOR 2SC3392-6-TB
Q599	8-729-216-22	s	TRANSISTOR 2SA1162-G
R105	1-216-089-00	s	RESISTOR CHIP 47K 1/10W(2012)
R106	1-216-089-00	s	RESISTOR CHIP 47K 1/10W(2012)
R107	1-216-089-00	s	RESISTOR CHIP 47K 1/10W(2012)
R108	1-216-057-00	s	RESISTOR CHIP 2.2K 1/10W(2012)
R109	1-216-025-00	s	RESISTOR,CHIP 100 1/10W(2012)
R110	1-216-025-00	s	RESISTOR,CHIP 100 1/10W(2012)
R111	1-216-025-00	s	RESISTOR,CHIP 100 1/10W(2012)
R112	1-216-025-00	s	RESISTOR,CHIP 100 1/10W(2012)
R113	1-216-049-11	s	RESISTOR, CHIP 1K 1/10W(2012)
R114	1-216-057-00	s	RESISTOR CHIP 2.2K 1/10W(2012)
R115	1-216-025-00	s	RESISTOR,CHIP 100 1/10W(2012)
R117	1-216-089-00	s	RESISTOR CHIP 47K 1/10W(2012)
R118	1-216-089-00	s	RESISTOR CHIP 47K 1/10W(2012)
R119	1-216-025-00	s	RESISTOR,CHIP 100 1/10W(2012)
R120	1-216-025-00	s	RESISTOR,CHIP 100 1/10W(2012)
R121	1-216-025-00	s	RESISTOR,CHIP 100 1/10W(2012)
R122	1-216-025-00	s	RESISTOR,CHIP 100 1/10W(2012)
R124	1-216-061-00	s	RESISTOR CHIP 3.3K 1/10W(2012)
R125	1-216-061-00	s	RESISTOR CHIP 3.3K 1/10W(2012)
R126	1-216-053-00	s	RESISTOR CHIP 1.5K 1/10W(2012)
R127	1-216-065-91	s	RESISTOR,CHIP 4.7K 1/10W(2012)
R128	1-216-304-11	s	RESISTOR,CHIP 3,3 1/10W(2012)
R129	1-216-067-00	s	RESISTOR,CHIP 5.6K 1/10W(2012)
R130	1-216-057-00	s	RESISTOR CHIP 2.2K 1/10W(2012)
R131	1-216-121-00	s	RESISTOR CHIP 1M 1/10W(2012)
R132	1-216-033-00	s	RESISTOR,CHIP 220 1/10W(2012)
R133	1-216-061-00	s	RESISTOR CHIP 3.3K 1/10W(2012)
R134	1-216-027-00	s	RESISTOR,CHIP 120 1/10W(2012)
R135	1-216-027-00	s	RESISTOR,CHIP 120 1/10W(2012)
R136	1-216-027-00	s	RESISTOR,CHIP 120 1/10W(2012)
R137	1-216-027-00	s	RESISTOR,CHIP 120 1/10W(2012)
R138	1-216-027-00	s	RESISTOR,CHIP 120 1/10W(2012)

(KY-484A BOARD (for DSR-1600/P))

Ref. No. or Q'ty	Part No.	SP	Description
R140	1-216-027-00	s	RESISTOR,CHIP 120 1/10W(2012)
R141	1-216-089-00	s	RESISTOR CHIP 47K 1/10W(2012)
R142	1-216-025-00	s	RESISTOR,CHIP 100 1/10W(2012)
R145	1-216-027-00	s	RESISTOR,CHIP 120 1/10W(2012)
R146	1-216-027-00	s	RESISTOR,CHIP 120 1/10W(2012)
R147	1-216-049-11	s	RESISTOR, CHIP 1K 1/10W(2012)
R148	1-216-037-00	s	RESISTOR,CHIP 330 1/10W(2012)
R149	1-216-037-00	s	RESISTOR,CHIP 330 1/10W(2012)
R150	1-216-037-00	s	RESISTOR,CHIP 330 1/10W(2012)
R151	1-216-089-00	s	RESISTOR CHIP 47K 1/10W(2012)
R152	1-216-089-00	s	RESISTOR CHIP 47K 1/10W(2012)
R153	1-216-025-00	s	RESISTOR,CHIP 100 1/10W(2012)
R154	1-216-089-00	s	RESISTOR CHIP 47K 1/10W(2012)
R155	1-216-025-00	s	RESISTOR,CHIP 100 1/10W(2012)
R156	1-216-089-00	s	RESISTOR CHIP 47K 1/10W(2012)
R157	1-216-025-00	s	RESISTOR,CHIP 100 1/10W(2012)
R159	1-216-089-00	s	RESISTOR CHIP 47K 1/10W(2012)
R201	1-216-049-11	s	RESISTOR, CHIP 1K 1/10W(2012)
R401	1-216-049-11	s	RESISTOR, CHIP 1K 1/10W(2012)
R402	1-216-049-11	s	RESISTOR, CHIP 1K 1/10W(2012)
R403	1-216-025-00	s	RESISTOR,CHIP 100 1/10W(2012)
R404	1-216-049-11	s	RESISTOR, CHIP 1K 1/10W(2012)
R405	1-216-033-00	s	RESISTOR,CHIP 220 1/10W(2012)
R406	1-208-823-11	s	RESISTOR,CHIP 51K 1/10W (2125)
R407	1-216-093-00	s	RESISTOR, CHIP 68K 1/10W(2012)
R500	1-216-025-00	s	RESISTOR,CHIP 100 1/10W(2012)
R501	1-216-025-00	s	RESISTOR,CHIP 100 1/10W(2012)
R502	1-216-025-00	s	RESISTOR,CHIP 100 1/10W(2012)
R503	1-216-025-00	s	RESISTOR,CHIP 100 1/10W(2012)
R504	1-216-025-00	s	RESISTOR,CHIP 100 1/10W(2012)
R505	1-216-025-00	s	RESISTOR,CHIP 100 1/10W(2012)
R506	1-216-025-00	s	RESISTOR,CHIP 100 1/10W(2012)
R507	1-216-025-00	s	RESISTOR,CHIP 100 1/10W(2012)
R508	1-216-025-00	s	RESISTOR,CHIP 100 1/10W(2012)
R509	1-216-025-00	s	RESISTOR,CHIP 100 1/10W(2012)
R510	1-216-025-00	s	RESISTOR,CHIP 100 1/10W(2012)
R511	1-216-025-00	s	RESISTOR,CHIP 100 1/10W(2012)
R512	1-216-025-00	s	RESISTOR,CHIP 100 1/10W(2012)
R513	1-216-025-00	s	RESISTOR,CHIP 100 1/10W(2012)
R514	1-216-025-00	s	RESISTOR,CHIP 100 1/10W(2012)
R515	1-216-025-00	s	RESISTOR,CHIP 100 1/10W(2012)
R516	1-216-025-00	s	RESISTOR,CHIP 100 1/10W(2012)
R517	1-216-025-00	s	RESISTOR,CHIP 100 1/10W(2012)
R518	1-216-025-00	s	RESISTOR,CHIP 100 1/10W(2012)
R519	1-216-025-00	s	RESISTOR,CHIP 100 1/10W(2012)
R520	1-216-025-00	s	RESISTOR,CHIP 100 1/10W(2012)
R521	1-216-025-00	s	RESISTOR,CHIP 100 1/10W(2012)
R522	1-216-025-00	s	RESISTOR,CHIP 100 1/10W(2012)
R523	1-216-025-00	s	RESISTOR,CHIP 100 1/10W(2012)
R524	1-216-025-00	s	RESISTOR,CHIP 100 1/10W(2012)
R525	1-216-025-00	s	RESISTOR,CHIP 100 1/10W(2012)
R526	1-216-025-00	s	RESISTOR,CHIP 100 1/10W(2012)
R527	1-216-025-00	s	RESISTOR,CHIP 100 1/10W(2012)
R528	1-216-025-00	s	RESISTOR,CHIP 100 1/10W(2012)
R529	1-216-025-00	s	RESISTOR,CHIP 100 1/10W(2012)
R530	1-216-025-00	s	RESISTOR,CHIP 100 1/10W(2012)
R531	1-216-025-00	s	RESISTOR,CHIP 100 1/10W(2012)
R532	1-216-025-00	s	RESISTOR,CHIP 100 1/10W(2012)
R533	1-216-025-00	s	RESISTOR,CHIP 100 1/10W(2012)

(KY-484A BOARD (for DSR-1600/P))

Ref. No. or Q'ty	Part No.	SP	Description
R534	1-216-025-00	s	RESISTOR,CHIP 100 1/10W(2012)
R535	1-216-025-00	s	RESISTOR,CHIP 100 1/10W(2012)
R536	1-216-025-00	s	RESISTOR,CHIP 100 1/10W(2012)
R537	1-216-025-00	s	RESISTOR,CHIP 100 1/10W(2012)
R538	1-216-025-00	s	RESISTOR,CHIP 100 1/10W(2012)
R539	1-216-025-00	s	RESISTOR,CHIP 100 1/10W(2012)
R540	1-216-025-00	s	RESISTOR,CHIP 100 1/10W(2012)
R541	1-216-025-00	s	RESISTOR,CHIP 100 1/10W(2012)
R542	1-216-025-00	s	RESISTOR,CHIP 100 1/10W(2012)
R543	1-216-025-00	s	RESISTOR,CHIP 100 1/10W(2012)
R544	1-216-025-00	s	RESISTOR,CHIP 100 1/10W(2012)
R545	1-216-025-00	s	RESISTOR,CHIP 100 1/10W(2012)
R546	1-216-025-00	s	RESISTOR,CHIP 100 1/10W(2012)
R547	1-216-025-00	s	RESISTOR,CHIP 100 1/10W(2012)
R548	1-216-025-00	s	RESISTOR,CHIP 100 1/10W(2012)
R549	1-216-025-00	s	RESISTOR,CHIP 100 1/10W(2012)
RB100	1-239-389-11	s	RESISTOR,NETWORK 47K (1608)
RB101	1-239-412-11	s	NETWORK, RESISTOR 100 (1608)
RB102	1-239-412-11	s	NETWORK, RESISTOR 100 (1608)
RB103	1-236-904-11	s	RESISTOR NETWORK 1K (1608)
RB200	1-236-904-11	s	RESISTOR NETWORK 1K (1608)
RB201	1-236-908-11	s	RESISTOR,NETWORK 10K (3216)
RB300	1-239-389-11	s	RESISTOR,NETWORK 47K (1608)
RV104	1-237-695-11	s	RESISTOR,VAR,CARBON 5K
RV105	1-237-695-11	s	RESISTOR,VAR,CARBON 5K
S101	1-692-892-11	s	SWITCH, TACTILE (WITH LIGHT)
S102	1-692-892-21	s	SWITCH, TACTILE (WITH LIGHT)
S103	1-692-890-41	s	SWITCH, TACTILE (WITH LIGHT)
S104	1-692-890-31	s	SWITCH, TACTILE (WITH LIGHT)
S105	1-692-890-21	s	SWITCH, TACTILE (WITH LIGHT)
S107	1-692-890-11	s	SWITCH, TACTILE
S108	1-572-827-11	s	SWITCH, PUSH
S109	1-572-827-11	s	SWITCH, PUSH
S110	1-572-827-11	s	SWITCH, PUSH
S305	1-771-122-11	s	SWITCH, SLIDE
S306	1-571-427-11	s	SWITCH,SLIDE (1-1-2)
S307	1-571-977-11	s	SWITCH,TACTIL
S308	1-571-977-11	s	SWITCH,TACTIL
S309	1-571-977-11	s	SWITCH,TACTIL
S310	1-571-977-11	s	SWITCH,TACTIL
S311	1-571-977-11	s	SWITCH,TACTIL
S312	1-571-977-11	s	SWITCH,TACTIL
S313	1-571-977-11	s	SWITCH,TACTIL
S314	1-571-977-11	s	SWITCH,TACTIL
T400	1-435-186-11	s	TRANSFORMER, CONVERTER
X100	1-781-174-21	s	VIBRATOR, CERAMIC (10.000MHZ)

MB-920 BOARD (for DSR-1800/P)

Ref. No. or Q'ty	Part No.	SP	Description
1pc	A-8326-494-A	o	MOUNTED CIRCUIT BOARD, MB-920
CN1	1-779-092-11	s	PIN, CONNECTOR (PC BOARD) 10P
CN2	1-580-838-11	o	PIN,CONNECTOR (PC BOARD) 4P
CN108	1-766-431-21	o	HOUSING, CONNECTOR 30P
CN109	1-766-383-11	o	PIN, CONNECTOR (12P)(SMD)1.5MM
CN200	1-778-534-11	o	CONNECTOR, FFC (ZIF) 45P
CN201	1-778-534-11	o	CONNECTOR, FFC (ZIF) 45P
CN202	1-778-534-11	o	CONNECTOR, FFC (ZIF) 45P
CN300	1-766-382-11	o	PIN, CONNECTOR (10P)(SMD)(1.5M
CN301	1-695-889-21	s	PIN, CONNECTOR (PC BOARD) 10P
CN302	1-778-534-11	o	CONNECTOR, FFC (ZIF) 45P
CN303	1-778-552-11	o	PIN, CONNECTOR 30P

MB-927 BOARD (for DSR-1600/P)

Ref. No. or Q'ty	Part No.	SP	Description
1pc	A-8326-521-A	o	MOUNTED CIRCUIT BOARD, MB-927
CN1	1-779-092-11	s	PIN, CONNECTOR (PC BOARD) 10P
CN2	1-580-838-11	o	PIN,CONNECTOR (PC BOARD) 4P
CN108	1-766-431-21	o	HOUSING, CONNECTOR 30P
CN109	1-766-383-11	o	PIN, CONNECTOR (12P)(SMD)1.5MM
CN200	1-778-534-11	o	CONNECTOR, FFC (ZIF) 45P
CN201	1-778-534-11	o	CONNECTOR, FFC (ZIF) 45P
CN300	1-766-382-11	o	PIN, CONNECTOR (10P)(SMD)(1.5M
CN301	1-695-889-21	s	PIN, CONNECTOR (PC BOARD) 10P
CN302	1-778-534-11	o	CONNECTOR, FFC (ZIF) 45P
CN303	1-778-552-11	o	PIN, CONNECTOR 30P

PRE-45 BOARD (for DSR-1600/P)

Ref. No. or Q'ty	Part No.	SP	Description
1pc	A-8326-475-A	o	MOUNTED CIRCUIT BOARD, PRE-45
C5	1-164-156-11	s	CAPACITOR,CERAMIC 0.1MF/25V F
C6	1-164-156-11	s	CAPACITOR,CERAMIC 0.1MF/25V F
C33	1-164-156-11	s	CAPACITOR,CERAMIC 0.1MF/25V F
C35	1-104-851-11	s	CAPACITOR,TANTALUM 10MF/10V
C36	1-164-156-11	s	CAPACITOR,CERAMIC 0.1MF/25V F
C37	1-164-156-11	s	CAPACITOR,CERAMIC 0.1MF/25V F
C38	1-164-156-11	s	CAPACITOR,CERAMIC 0.1MF/25V F
C39	1-164-156-11	s	CAPACITOR,CERAMIC 0.1MF/25V F
C40	1-164-156-11	s	CAPACITOR,CERAMIC 0.1MF/25V F
C41	1-164-156-11	s	CAPACITOR,CERAMIC 0.1MF/25V F
C42	1-115-416-11	s	CAPACITOR,CERAMIC 1000PF/25V
C43	1-115-416-11	s	CAPACITOR,CERAMIC 1000PF/25V
C44	1-164-156-11	s	CAPACITOR,CERAMIC 0.1MF/25V F
C45	1-115-416-11	s	CAPACITOR,CERAMIC 1000PF/25V
C46	1-162-970-11	s	CAPACITOR CERAMIC 0.01MF/25V B
C47	1-135-145-11	s	CAPACITOR TANTALUM 0.47MF/35V
C200	1-164-156-11	s	CAPACITOR,CERAMIC 0.1MF/25V F
C202	1-164-156-11	s	CAPACITOR,CERAMIC 0.1MF/25V F
C205	1-164-156-11	s	CAPACITOR,CERAMIC 0.1MF/25V F
C207	1-162-923-11	s	CAPACITOR,CERAMIC 47PF/50V CH
C208	1-162-969-11	s	CAPACITOR,CERAMIC 6800PF/25V B
C209	1-162-969-11	s	CAPACITOR,CERAMIC 6800PF/25V B
C210	1-162-969-11	s	CAPACITOR,CERAMIC 6800PF/25V B
C211	1-164-156-11	s	CAPACITOR,CERAMIC 0.1MF/25V F
C212	1-164-156-11	s	CAPACITOR,CERAMIC 0.1MF/25V F
C214	1-162-923-11	s	CAPACITOR,CERAMIC 47PF/50V CH
C216	1-162-923-11	s	CAPACITOR,CERAMIC 47PF/50V CH
C221	1-125-891-11	s	CAPACITOR CERAMIC 0.47MF/10V
C222	1-125-891-11	s	CAPACITOR CERAMIC 0.47MF/10V
C223	1-125-891-11	s	CAPACITOR CERAMIC 0.47MF/10V
C224	1-125-891-11	s	CAPACITOR CERAMIC 0.47MF/10V
C227	1-164-156-11	s	CAPACITOR,CERAMIC 0.1MF/25V F
C228	1-164-156-11	s	CAPACITOR,CERAMIC 0.1MF/25V F
C229	1-164-156-11	s	CAPACITOR,CERAMIC 0.1MF/25V F
C230	1-164-156-11	s	CAPACITOR,CERAMIC 0.1MF/25V F
C231	1-164-156-11	s	CAPACITOR,CERAMIC 0.1MF/25V F
C232	1-164-156-11	s	CAPACITOR,CERAMIC 0.1MF/25V F
C236	1-125-891-11	s	CAPACITOR CERAMIC 0.47MF/10V
C237	1-125-891-11	s	CAPACITOR CERAMIC 0.47MF/10V
C238	1-125-891-11	s	CAPACITOR CERAMIC 0.47MF/10V
C239	1-125-891-11	s	CAPACITOR CERAMIC 0.47MF/10V
C240	1-113-985-11	s	CAPACITOR,TANTALUM 10MF/20V
C241	1-164-156-11	s	CAPACITOR,CERAMIC 0.1MF/25V F
C500	1-113-985-11	s	CAPACITOR,TANTALUM 10MF/20V
C501	1-164-156-11	s	CAPACITOR,CERAMIC 0.1MF/25V F
C502	1-104-851-11	s	CAPACITOR,TANTALUM 10MF/10V
C503	1-164-156-11	s	CAPACITOR,CERAMIC 0.1MF/25V F
C505	1-164-315-11	s	CAPACITOR,CERAMIC 470PF/50V CH
C506	1-115-416-11	s	CAPACITOR,CERAMIC 1000PF/25V
C507	1-164-156-11	s	CAPACITOR,CERAMIC 0.1MF/25V F
C508	1-113-985-11	s	CAPACITOR,TANTALUM 10MF/20V
C509	1-164-156-11	s	CAPACITOR,CERAMIC 0.1MF/25V F
C510	1-164-156-11	s	CAPACITOR,CERAMIC 0.1MF/25V F
C511	1-164-156-11	s	CAPACITOR,CERAMIC 0.1MF/25V F
C512	1-164-156-11	s	CAPACITOR,CERAMIC 0.1MF/25V F
C513	1-164-156-11	s	CAPACITOR,CERAMIC 0.1MF/25V F
C514	1-162-927-11	s	CAPACITOR,CERAMIC 100PF/50V CH

(PRE-45 BOARD (for DSR-1600/P))

Ref. No. or Q'ty	Part No.	SP	Description
C515	1-162-923-11	s	CAPACITOR,CERAMIC 47PF/50V CH
C516	1-115-416-11	s	CAPACITOR,CERAMIC 1000PF/25V
C517	1-162-964-11	s	CAPACITOR,CERAMIC 1000PF/50V B
C518	1-162-970-11	s	CAPACITOR CERAMIC 0.01MF/25V B
C519	1-162-970-11	s	CAPACITOR CERAMIC 0.01MF/25V B
C520	1-162-970-11	s	CAPACITOR CERAMIC 0.01MF/25V B
C521	1-162-925-11	s	CAPACITOR,CERAMIC 68PF/50V CH
C522	1-164-156-11	s	CAPACITOR,CERAMIC 0.1MF/25V F
C523	1-162-964-11	s	CAPACITOR,CERAMIC 1000PF/50V B
C525	1-162-970-11	s	CAPACITOR CERAMIC 0.01MF/25V B
C526	1-162-964-11	s	CAPACITOR,CERAMIC 1000PF/50V B
C527	1-162-970-11	s	CAPACITOR CERAMIC 0.01MF/25V B
C528	1-162-970-11	s	CAPACITOR CERAMIC 0.01MF/25V B
C529	1-162-964-11	s	CAPACITOR,CERAMIC 1000PF/50V B
C530	1-162-964-11	s	CAPACITOR,CERAMIC 1000PF/50V B
C532	1-162-970-11	s	CAPACITOR CERAMIC 0.01MF/25V B
C533	1-162-970-11	s	CAPACITOR CERAMIC 0.01MF/25V B
C534	1-104-851-11	s	CAPACITOR,TANTALUM 10MF/10V
C535	1-164-156-11	s	CAPACITOR,CERAMIC 0.1MF/25V F
C536	1-164-156-11	s	CAPACITOR,CERAMIC 0.1MF/25V F
C537	1-164-156-11	s	CAPACITOR,CERAMIC 0.1MF/25V F
C538	1-164-217-11	s	CAPACITOR,CERAMIC 150PF/50V CH
C539	1-104-851-11	s	CAPACITOR,TANTALUM 10MF/10V
C540	1-162-970-11	s	CAPACITOR CERAMIC 0.01MF/25V B
C541	1-162-970-11	s	CAPACITOR CERAMIC 0.01MF/25V B
C542	1-164-217-11	s	CAPACITOR,CERAMIC 150PF/50V CH
C543	1-162-970-11	s	CAPACITOR CERAMIC 0.01MF/25V B
C544	1-162-970-11	s	CAPACITOR CERAMIC 0.01MF/25V B
C545	1-162-970-11	s	CAPACITOR CERAMIC 0.01MF/25V B
C546	1-162-923-11	s	CAPACITOR,CERAMIC 47PF/50V CH
C547	1-162-970-11	s	CAPACITOR CERAMIC 0.01MF/25V B
C548	1-162-970-11	s	CAPACITOR CERAMIC 0.01MF/25V B
C549	1-162-923-11	s	CAPACITOR,CERAMIC 47PF/50V CH
C550	1-162-966-11	s	CAPACITOR,CERAMIC 2200PF/50V B
C551	1-162-970-11	s	CAPACITOR CERAMIC 0.01MF/25V B
C552	1-162-966-11	s	CAPACITOR,CERAMIC 2200PF/50V B
C553	1-162-970-11	s	CAPACITOR CERAMIC 0.01MF/25V B
C554	1-162-970-11	s	CAPACITOR CERAMIC 0.01MF/25V B
C555	1-162-967-11	s	CAPACITOR,CERAMIC 3300PF/50V B
C556	1-162-967-11	s	CAPACITOR,CERAMIC 3300PF/50V B
C557	1-113-985-11	s	CAPACITOR,TANTALUM 10MF/20V
C558	1-164-156-11	s	CAPACITOR,CERAMIC 0.1MF/25V F
C559	1-164-156-11	s	CAPACITOR,CERAMIC 0.1MF/25V F
C560	1-164-156-11	s	CAPACITOR,CERAMIC 0.1MF/25V F
C561	1-104-851-11	s	CAPACITOR,TANTALUM 10MF/10V
C562	1-164-156-11	s	CAPACITOR,CERAMIC 0.1MF/25V F
C563	1-164-156-11	s	CAPACITOR,CERAMIC 0.1MF/25V F
C580	1-107-826-11	s	CAPACITOR,CHIP CERAMIC 0.1MF
C581	1-107-826-11	s	CAPACITOR,CHIP CERAMIC 0.1MF
C582	1-107-826-11	s	CAPACITOR,CHIP CERAMIC 0.1MF
C583	1-107-826-11	s	CAPACITOR,CHIP CERAMIC 0.1MF
C584	1-107-826-11	s	CAPACITOR,CHIP CERAMIC 0.1MF
C585	1-107-826-11	s	CAPACITOR,CHIP CERAMIC 0.1MF
C586	1-107-826-11	s	CAPACITOR,CHIP CERAMIC 0.1MF
C700	1-162-970-11	s	CAPACITOR CERAMIC 0.01MF/25V B
C701	1-104-851-11	s	CAPACITOR,TANTALUM 10MF/10V
C702	1-164-156-11	s	CAPACITOR,CERAMIC 0.1MF/25V F
C703	1-164-156-11	s	CAPACITOR,CERAMIC 0.1MF/25V F
C704	1-164-156-11	s	CAPACITOR,CERAMIC 0.1MF/25V F

(PRE-45 BOARD (for DSR-1600/P))

Ref. No. or Q'ty	Part No.	SP	Description
C705	1-164-156-11	s	CAPACITOR,CERAMIC 0.1MF/25V F
C706	1-164-156-11	s	CAPACITOR,CERAMIC 0.1MF/25V F
C707	1-164-156-11	s	CAPACITOR,CERAMIC 0.1MF/25V F
C708	1-164-156-11	s	CAPACITOR,CERAMIC 0.1MF/25V F
C709	1-164-156-11	s	CAPACITOR,CERAMIC 0.1MF/25V F
C710	1-164-156-11	s	CAPACITOR,CERAMIC 0.1MF/25V F
C711	1-164-156-11	s	CAPACITOR,CERAMIC 0.1MF/25V F
C712	1-104-851-11	s	CAPACITOR,TANTALUM 10MF/10V
C800	1-164-156-11	s	CAPACITOR,CERAMIC 0.1MF/25V F
C802	1-164-156-11	s	CAPACITOR,CERAMIC 0.1MF/25V F
C803	1-164-156-11	s	CAPACITOR,CERAMIC 0.1MF/25V F
C805	1-113-985-11	s	CAPACITOR,TANTALUM 10MF/20V
C807	1-113-985-11	s	CAPACITOR,TANTALUM 10MF/20V
C808	1-113-985-11	s	CAPACITOR,TANTALUM 10MF/20V
C810	1-104-851-11	s	CAPACITOR,TANTALUM 10MF/10V
C811	1-164-156-11	s	CAPACITOR,CERAMIC 0.1MF/25V F
C814	1-104-851-11	s	CAPACITOR,TANTALUM 10MF/10V
C815	1-164-156-11	s	CAPACITOR,CERAMIC 0.1MF/25V F
C816	1-164-156-11	s	CAPACITOR,CERAMIC 0.1MF/25V F
C817	1-113-985-11	s	CAPACITOR,TANTALUM 10MF/20V
C820	1-164-156-11	s	CAPACITOR,CERAMIC 0.1MF/25V F
C823	1-164-156-11	s	CAPACITOR,CERAMIC 0.1MF/25V F
C826	1-164-156-11	s	CAPACITOR,CERAMIC 0.1MF/25V F
C827	1-113-985-11	s	CAPACITOR,TANTALUM 10MF/20V
C830	1-164-156-11	s	CAPACITOR,CERAMIC 0.1MF/25V F
C831	1-164-156-11	s	CAPACITOR,CERAMIC 0.1MF/25V F
C900	1-113-985-11	s	CAPACITOR,TANTALUM 10MF/20V
C901	1-164-156-11	s	CAPACITOR,CERAMIC 0.1MF/25V F
C902	1-164-230-11	s	CAPACITOR,CERAMIC 220PF/50V
C903	1-164-230-11	s	CAPACITOR,CERAMIC 220PF/50V
C904	1-162-970-11	s	CAPACITOR CERAMIC 0.01MF/25V B
C905	1-162-970-11	s	CAPACITOR CERAMIC 0.01MF/25V B
C906	1-162-970-11	s	CAPACITOR CERAMIC 0.01MF/25V B
C907	1-162-970-11	s	CAPACITOR CERAMIC 0.01MF/25V B
C908	1-162-970-11	s	CAPACITOR CERAMIC 0.01MF/25V B
C909	1-162-966-11	s	CAPACITOR,CERAMIC 2200PF/50V B
C910	1-162-927-11	s	CAPACITOR,CERAMIC 100PF/50V CH
C911	1-104-851-11	s	CAPACITOR,TANTALUM 10MF/10V
C912	1-162-970-11	s	CAPACITOR CERAMIC 0.01MF/25V B
C913	1-164-156-11	s	CAPACITOR,CERAMIC 0.1MF/25V F
C980	1-164-156-11	s	CAPACITOR,CERAMIC 0.1MF/25V F
C981	1-164-156-11	s	CAPACITOR,CERAMIC 0.1MF/25V F
C982	1-164-156-11	s	CAPACITOR,CERAMIC 0.1MF/25V F
C983	1-164-156-11	s	CAPACITOR,CERAMIC 0.1MF/25V F
C984	1-164-156-11	s	CAPACITOR,CERAMIC 0.1MF/25V F
C985	1-164-156-11	s	CAPACITOR,CERAMIC 0.1MF/25V F
C986	1-164-156-11	s	CAPACITOR,CERAMIC 0.1MF/25V F
C987	1-164-156-11	s	CAPACITOR,CERAMIC 0.1MF/25V F
C988	1-164-156-11	s	CAPACITOR,CERAMIC 0.1MF/25V F
C989	1-164-156-11	s	CAPACITOR,CERAMIC 0.1MF/25V F
C990	1-164-156-11	s	CAPACITOR,CERAMIC 0.1MF/25V F
C991	1-164-156-11	s	CAPACITOR,CERAMIC 0.1MF/25V F
C992	1-164-156-11	s	CAPACITOR,CERAMIC 0.1MF/25V F
C993	1-164-156-11	s	CAPACITOR,CERAMIC 0.1MF/25V F
C994	1-104-851-11	s	CAPACITOR,TANTALUM 10MF/10V
C995	1-164-156-11	s	CAPACITOR,CERAMIC 0.1MF/25V F
C996	1-164-156-11	s	CAPACITOR,CERAMIC 0.1MF/25V F
CN2	1-770-297-21	o	HOUSING, CONNECTOR 12P

(PRE-45 BOARD (for DSR-1600/P))

Ref. No. or Q'ty	Part No.	SP	Description
CN3	1-778-534-11	o	CONNECTOR, FFC (ZIF) 45P
CN200	1-778-534-11	o	CONNECTOR, FFC (ZIF) 45P
CN201	1-778-534-11	o	CONNECTOR, FFC (ZIF) 45P
CN500	1-764-243-11	o	CONNECTOR (COAXIAL)
D5	8-719-027-95	s	DIODE HSM88WK
D6	8-719-041-39	s	DIODE KV1470 (5MA)
DL500	1-411-274-21	s	DELAY LINE, LC (23NS)
FL500	1-234-484-21	s	FILTER, LOW PASS
FL900	1-233-351-21	s	FILTER, BAND PASS
FL901	1-233-350-21	s	FILTER, BAND PASS
IC3	8-759-523-95	s	IC TC74VHC74FT(EL)
IC7	8-752-386-38	s	IC CXD3105R (T6)
IC8	8-759-196-96	s	IC TC7SH08FU (TE85R)
IC200	8-752-085-28	s	IC CXA3241TN-T2
IC201	8-752-085-28	s	IC CXA3241TN-T2
IC202	8-752-085-28	s	IC CXA3241TN-T2
IC205	8-752-085-27	s	IC CXA3240TN-T2
IC206	8-752-085-27	s	IC CXA3240TN-T2
IC500	8-752-074-59	s	IC CXA2023R
IC501	8-752-070-12	s	IC CXA1762Q
IC502	8-752-371-18	s	IC CXD2302Q
IC503	8-759-524-50	s	IC TC74VHC541FT(EL)
IC700	8-752-386-38	s	IC CXD3105R (T6)
IC701	8-759-524-50	s	IC TC74VHC541FT(EL)
IC702	8-759-524-50	s	IC TC74VHC541FT(EL)
IC800	8-759-259-77	s	IC PQ20VZ5U
IC801	8-759-491-47	s	IC TC74VHCT08FT (EL)
IC802	8-759-523-02	s	IC TC74HC4053AFT(EL)
IC804	8-759-259-77	s	IC PQ20VZ5U
IC805	8-759-157-17	s	IC PQ05SZ1U
IC807	8-759-445-93	s	IC AK6440AM (E2)
IC810	8-759-064-36	s	IC MB88346BPFV
IC900	8-759-062-66	s	IC TC7S66F
IC901	8-759-327-00	s	IC CXA8044Q (T4)
IC981	8-759-196-96	s	IC TC7SH08FU (TE85R)
L7	1-414-398-11	s	INDUCTOR (SMD) 10UH
L8	1-412-936-11	s	INDUCTOR CHIP 0.56UH (2520)
L201	1-414-397-11	s	INDUCTOR (SMD) 6.8UH
L500	1-414-398-11	s	INDUCTOR (SMD) 10UH
L501	1-414-398-11	s	INDUCTOR (SMD) 10UH
L502	1-414-398-11	s	INDUCTOR (SMD) 10UH
L503	1-410-657-21	s	CHIP INDUCTOR 180UH (3225)
L505	1-414-398-11	s	INDUCTOR (SMD) 10UH
L506	1-414-398-11	s	INDUCTOR (SMD) 10UH
L507	1-414-398-11	s	INDUCTOR (SMD) 10UH
L508	1-414-398-11	s	INDUCTOR (SMD) 10UH
L700	1-414-398-11	s	INDUCTOR (SMD) 10UH
L701	1-414-398-11	s	INDUCTOR (SMD) 10UH
L800	1-424-673-11	s	COIL, CHOKE 4.7UH
L801	1-424-673-11	s	COIL, CHOKE 4.7UH
L802	1-414-398-11	s	INDUCTOR (SMD) 10UH
L900	1-414-398-11	s	INDUCTOR (SMD) 10UH
L901	1-412-282-41	s	INDUCTOR,CHIP 470UH (3225)
L980	1-414-398-11	s	INDUCTOR (SMD) 10UH
PS800	⚠ 1-533-282-21	s	CIRCUIT PROTECTOR 2A (3225)
PS801	⚠ 1-533-282-21	s	CIRCUIT PROTECTOR 2A (3225)

(PRE-45 BOARD (for DSR-1600/P))

Ref. No. or Q'ty	Part No.	SP	Description
Q1	1-801-806-11	s	TRANSISTOR DTC144EAK
Q500	8-729-039-79	s	TRANSISTOR 2SA1813-TL
Q501	8-729-905-35	s	TRANSISTOR 2SC4081-R
Q502	8-729-905-35	s	TRANSISTOR 2SC4081-R
Q503	8-729-905-23	s	TRANSISTOR 2SA1576-R
Q504	8-729-905-35	s	TRANSISTOR 2SC4081-R
Q505	8-729-905-35	s	TRANSISTOR 2SC4081-R
Q506	1-801-806-11	s	TRANSISTOR DTC144EAK
Q507	1-801-806-11	s	TRANSISTOR DTC144EAK
Q508	8-729-041-82	s	TRANSISTOR UPA801T-T1/FB
Q509	8-729-041-82	s	TRANSISTOR UPA801T-T1/FB
Q900	8-729-905-35	s	TRANSISTOR 2SC4081-R
Q901	1-801-806-11	s	TRANSISTOR DTC144EAK
R1	1-216-864-11	s	RESISTOR,CHIP 0 1/16W (1608)
R10	1-216-837-11	s	RESISTOR,CHIP 22K 1/16W 1608
R37	1-216-864-11	s	RESISTOR,CHIP 0 1/16W (1608)
R38	1-216-864-11	s	RESISTOR,CHIP 0 1/16W (1608)
R39	1-216-833-11	s	RESISTOR,CHIP 10K 1/16W (1608)
R40	1-216-864-11	s	RESISTOR,CHIP 0 1/16W (1608)
R41	1-216-845-11	s	RESISTOR,CHIP 100K 1/16W(1608)
R42	1-216-864-11	s	RESISTOR,CHIP 0 1/16W (1608)
R43	1-216-864-11	s	RESISTOR,CHIP 0 1/16W (1608)
R44	1-218-887-11	s	RESISTOR,CHIP 47K 1/16W (1608)
R45	1-218-887-11	s	RESISTOR,CHIP 47K 1/16W (1608)
R46	1-216-809-11	s	RESISTOR,CHIP 100 1/16W 1608
R47	1-218-855-11	s	RESISTOR,CHIP 2.2K 1/16W(1608)
R48	1-216-814-11	s	RESISTOR,CHIP 270 1/16W 1608
R49	1-216-809-11	s	RESISTOR,CHIP 100 1/16W 1608
R50	1-216-864-11	s	RESISTOR,CHIP 0 1/16W (1608)
R51	1-216-809-11	s	RESISTOR,CHIP 100 1/16W 1608
R201	1-211-985-11	s	RESISTOR,CHIP 47 1/16W (1608)
R202	1-216-821-11	s	RESISTOR,CHIP 1.0K 1/16W(1608)
R203	1-216-864-11	s	RESISTOR,CHIP 0 1/16W (1608)
R204	1-216-805-11	s	RESISTOR,CHIP 47 1/16W 1608
R205	1-216-797-11	s	RESISTOR,CHIP 10 1/16W 1608
R206	1-216-797-11	s	RESISTOR,CHIP 10 1/16W 1608
R207	1-216-795-11	s	RESISTOR,CHIP 6.8 1/16W(1608)
R208	1-216-835-11	s	RESISTOR,CHIP 15K 1/16W
R209	1-216-835-11	s	RESISTOR,CHIP 15K 1/16W
R210	1-218-827-11	s	RESISTOR,CHIP 150 1/16W (1608)
R211	1-218-827-11	s	RESISTOR,CHIP 150 1/16W (1608)
R218	1-216-805-11	s	RESISTOR,CHIP 47 1/16W 1608
R221	1-211-969-11	s	RESISTOR,CHIP 10 1/16W (1608)
R222	1-211-969-11	s	RESISTOR,CHIP 10 1/16W (1608)
R223	1-216-805-11	s	RESISTOR,CHIP 47 1/16W 1608
R224	1-211-969-11	s	RESISTOR,CHIP 10 1/16W (1608)
R225	1-211-969-11	s	RESISTOR,CHIP 10 1/16W (1608)
R226	1-216-805-11	s	RESISTOR,CHIP 47 1/16W 1608
R227	1-216-805-11	s	RESISTOR,CHIP 47 1/16W 1608
R231	1-218-855-11	s	RESISTOR,CHIP 2.2K 1/16W(1608)
R232	1-218-855-11	s	RESISTOR,CHIP 2.2K 1/16W(1608)
R233	1-218-855-11	s	RESISTOR,CHIP 2.2K 1/16W(1608)
R234	1-218-855-11	s	RESISTOR,CHIP 2.2K 1/16W(1608)
R241	1-216-805-11	s	RESISTOR,CHIP 47 1/16W 1608
R242	1-216-864-11	s	RESISTOR,CHIP 0 1/16W (1608)
R243	1-216-805-11	s	RESISTOR,CHIP 47 1/16W 1608
R244	1-216-864-11	s	RESISTOR,CHIP 0 1/16W (1608)
R500	1-216-841-11	s	RESISTOR, CHIP 47K 1/16W 1608

(PRE-45 BOARD (for DSR-1600/P))

Ref. No. or Q'ty	Part No.	SP	Description
R501	1-218-863-11	s	RESISTOR,CHIP 4.7K 1/16W(1608)
R502	1-218-867-11	s	RESISTOR,CHIP 6.8K 1/16W(1608)
R503	1-216-853-11	s	RESISTOR,CHIP 470K 1/16W(1608)
R504	1-218-864-11	s	RESISTOR,CHIP 5.1K 1/16W(1608)
R505	1-218-863-11	s	RESISTOR,CHIP 4.7K 1/16W(1608)
R506	1-216-821-11	s	RESISTOR,CHIP 1.0K 1/16W(1608)
R507	1-218-823-11	s	RESISTOR,CHIP 100 1/16W (1608)
R508	1-216-817-11	s	RESISTOR,CHIP 470 1/16W 1608
R509	1-216-821-11	s	RESISTOR,CHIP 1.0K 1/16W(1608)
R510	1-216-814-11	s	RESISTOR,CHIP 270 1/16W 1608
R511	1-218-849-11	s	RESISTOR,CHIP 1.2K 1/16W(1608)
R512	1-218-875-11	s	RESISTOR,CHIP 15K 1/16W (1608)
R513	1-211-973-11	s	RESISTOR,CHIP 15 1/16W (1608)
R514	1-216-805-11	s	RESISTOR,CHIP 47 1/16W 1608
R515	1-216-853-11	s	RESISTOR,CHIP 470K 1/16W(1608)
R516	1-218-880-11	s	RESISTOR,CHIP 24K 1/16W (1608)
R517	1-218-880-11	s	RESISTOR,CHIP 24K 1/16W (1608)
R518	1-218-879-11	s	RESISTOR,CHIP 22K 1/16W (1608)
R519	1-218-880-11	s	RESISTOR,CHIP 24K 1/16W (1608)
R520	1-218-847-11	s	RESISTOR, CHIP 1K 1/16W (1608)
R521	1-211-973-11	s	RESISTOR,CHIP 15 1/16W (1608)
R523	1-218-875-11	s	RESISTOR,CHIP 15K 1/16W (1608)
R524	1-218-871-11	s	RESISTOR,CHIP 10K 1/16W (1608)
R525	1-218-837-11	s	RESISTOR,CHIP 390 1/16W (1608)
R526	1-218-837-11	s	RESISTOR,CHIP 390 1/16W (1608)
R527	1-218-835-11	s	RESISTOR,CHIP 330 1/16W (1608)
R528	1-218-835-11	s	RESISTOR,CHIP 330 1/16W (1608)
R529	1-218-835-11	s	RESISTOR,CHIP 330 1/16W (1608)
R530	1-218-835-11	s	RESISTOR,CHIP 330 1/16W (1608)
R531	1-218-839-11	s	RESISTOR,CHIP 470 1/16W (1608)
R532	1-218-832-11	s	RESISTOR,CHIP 240 1/16W (1608)
R533	1-218-832-11	s	RESISTOR,CHIP 240 1/16W (1608)
R534	1-216-864-11	s	RESISTOR,CHIP 0 1/16W (1608)
R535	1-218-878-11	s	RESISTOR,CHIP 20K 1/16W (1608)
R536	1-218-879-11	s	RESISTOR,CHIP 22K 1/16W (1608)
R537	1-216-835-11	s	RESISTOR,CHIP 15K 1/16W
R538	1-216-809-11	s	RESISTOR,CHIP 100 1/16W 1608
R539	1-216-809-11	s	RESISTOR,CHIP 100 1/16W 1608
R540	1-216-810-11	s	RESISTOR, CHIP 120 1/16W 1608
R541	1-216-810-11	s	RESISTOR, CHIP 120 1/16W 1608
R542	1-218-871-11	s	RESISTOR,CHIP 10K 1/16W (1608)
R543	1-218-871-11	s	RESISTOR,CHIP 10K 1/16W (1608)
R544	1-216-864-11	s	RESISTOR,CHIP 0 1/16W (1608)
R545	1-216-864-11	s	RESISTOR,CHIP 0 1/16W (1608)
R546	1-216-864-11	s	RESISTOR,CHIP 0 1/16W (1608)
R560	1-216-829-11	s	RESISTOR,CHIP 4.7K 1/16W(1608)
R561	1-216-829-11	s	RESISTOR,CHIP 4.7K 1/16W(1608)
R562	1-216-809-11	s	RESISTOR,CHIP 100 1/16W 1608
R563	1-216-805-11	s	RESISTOR,CHIP 47 1/16W 1608
R564	1-218-839-11	s	RESISTOR,CHIP 470 1/16W (1608)
R565	1-216-805-11	s	RESISTOR,CHIP 47 1/16W 1608
R566	1-216-817-11	s	RESISTOR,CHIP 470 1/16W 1608
R567	1-216-809-11	s	RESISTOR,CHIP 100 1/16W 1608
R568	1-216-829-11	s	RESISTOR,CHIP 4.7K 1/16W(1608)
R569	1-216-829-11	s	RESISTOR,CHIP 4.7K 1/16W(1608)
R570	1-216-809-11	s	RESISTOR,CHIP 100 1/16W 1608
R571	1-216-805-11	s	RESISTOR,CHIP 47 1/16W 1608
R572	1-218-839-11	s	RESISTOR,CHIP 470 1/16W (1608)
R573	1-211-989-11	s	RESISTOR,CHIP 68 1/16W (1608)

(PRE-45 BOARD (for DSR-1600/P))

Ref. No. or Q'ty	Part No.	SP	Description
R576	1-216-809-11	s	RESISTOR,CHIP 100 1/16W 1608
R578	1-216-864-11	s	RESISTOR,CHIP 0 1/16W (1608)
R579	1-216-864-11	s	RESISTOR,CHIP 0 1/16W (1608)
R702	1-216-845-11	s	RESISTOR,CHIP 100K 1/16W(1608)
R703	1-216-837-11	s	RESISTOR,CHIP 22K 1/16W 1608
R704	1-216-809-11	s	RESISTOR,CHIP 100 1/16W 1608
R705	1-216-809-11	s	RESISTOR,CHIP 100 1/16W 1608
R706	1-216-809-11	s	RESISTOR,CHIP 100 1/16W 1608
R707	1-216-809-11	s	RESISTOR,CHIP 100 1/16W 1608
R708	1-216-809-11	s	RESISTOR,CHIP 100 1/16W 1608
R709	1-216-864-11	s	RESISTOR,CHIP 0 1/16W (1608)
R710	1-216-864-11	s	RESISTOR,CHIP 0 1/16W (1608)
R711	1-216-864-11	s	RESISTOR,CHIP 0 1/16W (1608)
R712	1-216-864-11	s	RESISTOR,CHIP 0 1/16W (1608)
R713	1-216-809-11	s	RESISTOR,CHIP 100 1/16W 1608
R800	1-218-851-11	s	RESISTOR,CHIP 1.5K 1/16W(1608)
R801	1-218-847-11	s	RESISTOR, CHIP 1K 1/16W (1608)
R804	1-218-851-11	s	RESISTOR,CHIP 1.5K 1/16W(1608)
R805	1-218-847-11	s	RESISTOR, CHIP 1K 1/16W (1608)
R806	1-216-845-11	s	RESISTOR,CHIP 100K 1/16W(1608)
R900	1-218-855-11	s	RESISTOR,CHIP 2.2K 1/16W(1608)
R901	1-218-855-11	s	RESISTOR,CHIP 2.2K 1/16W(1608)
R902	1-218-847-11	s	RESISTOR, CHIP 1K 1/16W (1608)
R903	1-218-847-11	s	RESISTOR, CHIP 1K 1/16W (1608)
R904	1-216-832-11	s	RESISTOR,CHIP 8.2K 1/16W 1608
R905	1-216-843-11	s	RESISTOR,CHIP 68K 1/16W (1608)
R906	1-216-839-11	s	RESISTOR,CHIP 33K 1/16W 1608
R907	1-216-833-11	s	RESISTOR,CHIP 10K 1/16W (1608)
R908	1-216-834-11	s	RESISTOR,CHIP 12K 1/16W 1608
R910	1-216-833-11	s	RESISTOR,CHIP 10K 1/16W (1608)
R911	1-218-871-11	s	RESISTOR,CHIP 10K 1/16W (1608)
R912	1-218-879-11	s	RESISTOR,CHIP 22K 1/16W (1608)
R913	1-216-839-11	s	RESISTOR,CHIP 33K 1/16W 1608
R914	1-216-834-11	s	RESISTOR,CHIP 12K 1/16W 1608
R915	1-216-817-11	s	RESISTOR,CHIP 470 1/16W 1608
R916	1-216-833-11	s	RESISTOR,CHIP 10K 1/16W (1608)
R917	1-216-833-11	s	RESISTOR,CHIP 10K 1/16W (1608)
R918	1-216-833-11	s	RESISTOR,CHIP 10K 1/16W (1608)
R919	1-216-821-11	s	RESISTOR,CHIP 1.0K 1/16W(1608)
R920	1-216-864-11	s	RESISTOR,CHIP 0 1/16W (1608)
R950	1-218-823-11	s	RESISTOR,CHIP 100 1/16W (1608)
R951	1-218-823-11	s	RESISTOR,CHIP 100 1/16W (1608)
R955	1-218-823-11	s	RESISTOR,CHIP 100 1/16W (1608)
R956	1-216-809-11	s	RESISTOR,CHIP 100 1/16W 1608
R957	1-216-809-11	s	RESISTOR,CHIP 100 1/16W 1608
R958	1-218-823-11	s	RESISTOR,CHIP 100 1/16W (1608)
R959	1-218-823-11	s	RESISTOR,CHIP 100 1/16W (1608)
R960	1-216-803-11	s	RESISTOR,CHIP 33 1/16W (1608)
R980	1-216-864-11	s	RESISTOR,CHIP 0 1/16W (1608)
R981	1-216-864-11	s	RESISTOR,CHIP 0 1/16W (1608)
R982	1-216-864-11	s	RESISTOR,CHIP 0 1/16W (1608)
R983	1-216-864-11	s	RESISTOR,CHIP 0 1/16W (1608)
R984	1-216-864-11	s	RESISTOR,CHIP 0 1/16W (1608)
R985	1-216-809-11	s	RESISTOR,CHIP 100 1/16W 1608
R986	1-216-809-11	s	RESISTOR,CHIP 100 1/16W 1608
R987	1-216-809-11	s	RESISTOR,CHIP 100 1/16W 1608
R988	1-216-809-11	s	RESISTOR,CHIP 100 1/16W 1608
R989	1-216-809-11	s	RESISTOR,CHIP 100 1/16W 1608
R990	1-216-809-11	s	RESISTOR,CHIP 100 1/16W 1608

(PRE-45 BOARD (for DSR-1600/P))

Ref. No. or Q'ty	Part No.	SP	Description
R994	1-216-809-11	s	RESISTOR,CHIP 100 1/16W 1608
R995	1-216-833-11	s	RESISTOR,CHIP 10K 1/16W (1608)
R996	1-216-864-11	s	RESISTOR,CHIP 0 1/16W (1608)
R997	1-216-837-11	s	RESISTOR,CHIP 22K 1/16W 1608
RB700	1-236-904-11	s	RESISTOR NETWORK 1K (1608)
RB701	1-236-904-11	s	RESISTOR NETWORK 1K (1608)
RB702	1-239-711-11	s	NETWORK, RESISTOR 0 (1608)
RB703	1-239-711-11	s	NETWORK, RESISTOR 0 (1608)
RB704	1-239-711-11	s	NETWORK, RESISTOR 0 (1608)
RB800	1-239-412-11	s	NETWORK, RESISTOR 100 (1608)
RB802	1-239-412-11	s	NETWORK, RESISTOR 100 (1608)
RB980	1-239-416-11	s	NETWORK,RESISTOR 220 (1608)
RB981	1-239-416-11	s	NETWORK,RESISTOR 220 (1608)

http://getMANUAL.com

PTC-100 BOARD

Ref. No. or Q'ty	Part No.	SP	Description
C1	1-126-157-11	s	CAPACITOR,ELECT 10MF/16V (105)
C2	1-163-038-00	s	CAPACITOR, CERAMIC 0.1MF/25V
C5	1-163-021-91	s	CAPACITOR, CERAMIC 0.01MF/50V
C6	1-163-021-91	s	CAPACITOR, CERAMIC 0.01MF/50V
C7	1-163-021-91	s	CAPACITOR, CERAMIC 0.01MF/50V
C8	1-163-021-91	s	CAPACITOR, CERAMIC 0.01MF/50V
C12	1-163-038-00	s	CAPACITOR, CERAMIC 0.1MF/25V
CN1	1-564-005-11	o	PIN, CONNECTOR 6P
IC2	8-759-981-61	s	IC LM2901M
PH4	8-749-925-01	s	PHOTO INTERRUPTER SPI-235-18
R1	1-208-774-11	s	RESISTOR,CHIP 470 1/10W (2012)
R2	1-208-774-11	s	RESISTOR,CHIP 470 1/10W (2012)
R5	1-208-822-11	s	RESISTOR,CHIP 47K 1/10W (2012)
R6	1-208-806-11	s	RESISTOR,CHIP 10K 1/10W (2012)
R7	1-208-806-11	s	RESISTOR,CHIP 10K 1/10W (2012)
R8	1-208-822-11	s	RESISTOR,CHIP 47K 1/10W (2012)
R11	1-208-806-11	s	RESISTOR,CHIP 10K 1/10W (2012)
R12	1-208-806-11	s	RESISTOR,CHIP 10K 1/10W (2012)
R14	1-208-806-11	s	RESISTOR,CHIP 10K 1/10W (2012)
R15	1-208-814-11	s	RESISTOR,CHIP 22K 1/10W (2012)
R17	1-208-814-11	s	RESISTOR,CHIP 22K 1/10W (2012)
R18	1-208-806-11	s	RESISTOR,CHIP 10K 1/10W (2012)
R20	1-208-806-11	s	RESISTOR,CHIP 10K 1/10W (2012)
R22	1-208-806-11	s	RESISTOR,CHIP 10K 1/10W (2012)
R23	1-208-814-11	s	RESISTOR,CHIP 22K 1/10W (2012)
R24	1-208-806-11	s	RESISTOR,CHIP 10K 1/10W (2012)
R27	1-208-830-11	s	RESISTOR,CHIP 100K 1/10W(2012)
R28	1-208-830-11	s	RESISTOR,CHIP 100K 1/10W(2012)
R29	1-208-830-11	s	RESISTOR,CHIP 100K 1/10W(2012)
R30	1-208-830-11	s	RESISTOR,CHIP 100K 1/10W(2012)
R31	1-208-806-11	s	RESISTOR,CHIP 10K 1/10W (2012)
R32	1-208-806-11	s	RESISTOR,CHIP 10K 1/10W (2012)
R33	1-208-806-11	s	RESISTOR,CHIP 10K 1/10W (2012)
R34	1-208-806-11	s	RESISTOR,CHIP 10K 1/10W (2012)
R35	1-208-774-11	s	RESISTOR,CHIP 470 1/10W (2012)
R36	1-208-806-11	s	RESISTOR,CHIP 10K 1/10W (2012)
R37	1-208-806-11	s	RESISTOR,CHIP 10K 1/10W (2012)
R38	1-208-774-11	s	RESISTOR,CHIP 470 1/10W (2012)
R39	1-208-806-11	s	RESISTOR,CHIP 10K 1/10W (2012)
R40	1-208-806-11	s	RESISTOR,CHIP 10K 1/10W (2012)

RP-120 BOARD (for DSR-1800/P)

*1: Lot No.083 and higher

Ref. No. or Q'ty	Part No.	SP	Description
1pc	A-8326-496-A	o	MOUNTED CIRCUIT BOARD, RP-120
C1	1-164-156-11	s	CAPACITOR,CERAMIC 0.1MF/25V F
C2	1-104-851-11	s	CAPACITOR,TANTALUM 10MF/10V
C3	1-164-156-11	s	CAPACITOR,CERAMIC 0.1MF/25V F
C4	1-164-156-11	s	CAPACITOR,CERAMIC 0.1MF/25V F
C5	1-104-851-11	s	CAPACITOR,TANTALUM 10MF/10V
C6	1-164-156-11	s	CAPACITOR,CERAMIC 0.1MF/25V F
C7	1-164-156-11	s	CAPACITOR,CERAMIC 0.1MF/25V F
C8	1-164-156-11	s	CAPACITOR,CERAMIC 0.1MF/25V F
C9	1-164-156-11	s	CAPACITOR,CERAMIC 0.1MF/25V F
C10	1-164-156-11	s	CAPACITOR,CERAMIC 0.1MF/25V F
C11	1-164-156-11	s	CAPACITOR,CERAMIC 0.1MF/25V F
C12	1-115-416-11	s	CAPACITOR,CERAMIC 1000PF/25V
C13	1-115-416-11	s	CAPACITOR,CERAMIC 1000PF/25V
C14	1-115-416-11	s	CAPACITOR,CERAMIC 1000PF/25V
C15	1-162-970-11	s	CAPACITOR CERAMIC 0.01MF/25V B
C16	1-135-145-11	s	CAPACITOR TANTALUM 0.47MF/35V
C17	1-164-156-11	s	CAPACITOR,CERAMIC 0.1MF/25V F
C18	1-164-156-11	s	CAPACITOR,CERAMIC 0.1MF/25V F
C19	1-104-851-11	s	CAPACITOR,TANTALUM 10MF/10V
C20	1-104-851-11	s	CAPACITOR,TANTALUM 10MF/10V
C21	1-164-156-11	s	CAPACITOR,CERAMIC 0.1MF/25V F
C22	1-164-156-11	s	CAPACITOR,CERAMIC 0.1MF/25V F
C23	1-164-156-11	s	CAPACITOR,CERAMIC 0.1MF/25V F
C24	1-164-156-11	s	CAPACITOR,CERAMIC 0.1MF/25V F
C25	1-164-156-11	s	CAPACITOR,CERAMIC 0.1MF/25V F
C26	1-164-156-11	s	CAPACITOR,CERAMIC 0.1MF/25V F
C27	1-115-416-11	s	CAPACITOR,CERAMIC 1000PF/25V
C28	1-115-416-11	s	CAPACITOR,CERAMIC 1000PF/25V
C29	1-115-416-11	s	CAPACITOR,CERAMIC 1000PF/25V
C30	1-162-970-11	s	CAPACITOR CERAMIC 0.01MF/25V B
C31	1-135-145-11	s	CAPACITOR TANTALUM 0.47MF/35V
C32	1-164-156-11	s	CAPACITOR,CERAMIC 0.1MF/25V F
C33	1-164-156-11	s	CAPACITOR,CERAMIC 0.1MF/25V F
C34	1-164-156-11	s	CAPACITOR,CERAMIC 0.1MF/25V F
C35	1-104-851-11	s	CAPACITOR,TANTALUM 10MF/10V
C36	1-164-156-11	s	CAPACITOR,CERAMIC 0.1MF/25V F
C37	1-164-156-11	s	CAPACITOR,CERAMIC 0.1MF/25V F
C38	1-164-156-11	s	CAPACITOR,CERAMIC 0.1MF/25V F
C39	1-164-156-11	s	CAPACITOR,CERAMIC 0.1MF/25V F
C40	1-164-156-11	s	CAPACITOR,CERAMIC 0.1MF/25V F
C41	1-164-156-11	s	CAPACITOR,CERAMIC 0.1MF/25V F
C42	1-115-416-11	s	CAPACITOR,CERAMIC 1000PF/25V
C43	1-115-416-11	s	CAPACITOR,CERAMIC 1000PF/25V
C44	1-164-156-11	s	CAPACITOR,CERAMIC 0.1MF/25V F
C45	1-115-416-11	s	CAPACITOR,CERAMIC 1000PF/25V
C46	1-162-970-11	s	CAPACITOR CERAMIC 0.01MF/25V B
C47	1-135-145-11	s	CAPACITOR TANTALUM 0.47MF/35V
C48	1-113-985-11	s	CAPACITOR,TANTALUM 10MF/20V
C49	1-164-156-11	s	CAPACITOR,CERAMIC 0.1MF/25V F
C50	1-164-156-11	s	CAPACITOR,CERAMIC 0.1MF/25V F
C51	1-162-970-11	s	CAPACITOR CERAMIC 0.01MF/25V B
C52	1-104-851-11	s	CAPACITOR,TANTALUM 10MF/10V
C100	1-164-156-11	s	CAPACITOR,CERAMIC 0.1MF/25V F
C101	1-113-985-11	s	CAPACITOR,TANTALUM 10MF/20V
C102	1-162-970-11	s	CAPACITOR CERAMIC 0.01MF/25V B
C103	1-162-970-11	s	CAPACITOR CERAMIC 0.01MF/25V B

(RP-120 BOARD (for DSR-1800/P))

Ref. No. or Q'ty	Part No.	SP	Description
C104	1-164-156-11	s	CAPACITOR,CERAMIC 0.1MF/25V F
C105	1-162-970-11	s	CAPACITOR CERAMIC 0.01MF/25V B
C106	1-162-970-11	s	CAPACITOR CERAMIC 0.01MF/25V B
C107	1-164-156-11	s	CAPACITOR,CERAMIC 0.1MF/25V F
C108	1-104-851-11	s	CAPACITOR,TANTALUM 10MF/10V
C115	1-164-156-11	s	CAPACITOR,CERAMIC 0.1MF/25V F
C116	1-164-156-11	s	CAPACITOR,CERAMIC 0.1MF/25V F
C117	1-164-156-11	s	CAPACITOR,CERAMIC 0.1MF/25V F
C118	1-162-923-11	s	CAPACITOR,CERAMIC 47PF/50V CH
C119	1-162-969-11	s	CAPACITOR,CERAMIC 6800PF/25V B
C120	1-162-969-11	s	CAPACITOR,CERAMIC 6800PF/25V B
C121	1-162-969-11	s	CAPACITOR,CERAMIC 6800PF/25V B
C122	1-164-156-11	s	CAPACITOR,CERAMIC 0.1MF/25V F
C123	1-164-156-11	s	CAPACITOR,CERAMIC 0.1MF/25V F
C125	1-162-923-11	s	CAPACITOR,CERAMIC 47PF/50V CH
C127	1-162-925-11	s	CAPACITOR,CERAMIC 68PF/50V CH
C128	1-164-156-11	s	CAPACITOR,CERAMIC 0.1MF/25V F
C130	1-162-970-11	s	CAPACITOR CERAMIC 0.01MF/25V B
C131	1-162-970-11	s	CAPACITOR CERAMIC 0.01MF/25V B
C132	1-164-156-11	s	CAPACITOR,CERAMIC 0.1MF/25V F
C133	1-162-958-11	s	CAPACITOR,CERAMIC 270PF/50V SL
C134	1-164-156-11	s	CAPACITOR,CERAMIC 0.1MF/25V F
C135	1-164-156-11	s	CAPACITOR,CERAMIC 0.1MF/25V F
C136	1-162-970-11	s	CAPACITOR CERAMIC 0.01MF/25V B
C137	1-162-970-11	s	CAPACITOR CERAMIC 0.01MF/25V B
C138	1-164-156-11	s	CAPACITOR,CERAMIC 0.1MF/25V F
C139	1-164-156-11	s	CAPACITOR,CERAMIC 0.1MF/25V F
C140	1-162-923-11	s	CAPACITOR,CERAMIC 47PF/50V CH
C141	1-113-985-11	s	CAPACITOR,TANTALUM 10MF/20V
C142	1-164-156-11	s	CAPACITOR,CERAMIC 0.1MF/25V F
C150	1-164-156-11	s	CAPACITOR,CERAMIC 0.1MF/25V F
C151	1-113-985-11	s	CAPACITOR,TANTALUM 10MF/20V
C152	1-162-970-11	s	CAPACITOR CERAMIC 0.01MF/25V B
C153	1-162-970-11	s	CAPACITOR CERAMIC 0.01MF/25V B
C154	1-164-156-11	s	CAPACITOR,CERAMIC 0.1MF/25V F
C155	1-162-970-11	s	CAPACITOR CERAMIC 0.01MF/25V B
C156	1-162-970-11	s	CAPACITOR CERAMIC 0.01MF/25V B
C157	1-164-156-11	s	CAPACITOR,CERAMIC 0.1MF/25V F
C158	1-104-851-11	s	CAPACITOR,TANTALUM 10MF/10V
C165	1-164-156-11	s	CAPACITOR,CERAMIC 0.1MF/25V F
C166	1-164-156-11	s	CAPACITOR,CERAMIC 0.1MF/25V F
C167	1-164-156-11	s	CAPACITOR,CERAMIC 0.1MF/25V F
C168	1-162-923-11	s	CAPACITOR,CERAMIC 47PF/50V CH
C169	1-162-969-11	s	CAPACITOR,CERAMIC 6800PF/25V B
C170	1-162-969-11	s	CAPACITOR,CERAMIC 6800PF/25V B
C171	1-162-969-11	s	CAPACITOR,CERAMIC 6800PF/25V B
C172	1-164-156-11	s	CAPACITOR,CERAMIC 0.1MF/25V F
C173	1-164-156-11	s	CAPACITOR,CERAMIC 0.1MF/25V F
C175	1-162-923-11	s	CAPACITOR,CERAMIC 47PF/50V CH
C177	1-162-925-11	s	CAPACITOR,CERAMIC 68PF/50V CH
C178	1-164-156-11	s	CAPACITOR,CERAMIC 0.1MF/25V F
C180	1-162-970-11	s	CAPACITOR CERAMIC 0.01MF/25V B
C181	1-162-970-11	s	CAPACITOR CERAMIC 0.01MF/25V B
C182	1-164-156-11	s	CAPACITOR,CERAMIC 0.1MF/25V F
C183	1-162-958-11	s	CAPACITOR,CERAMIC 270PF/50V SL
C184	1-164-156-11	s	CAPACITOR,CERAMIC 0.1MF/25V F
C185	1-164-156-11	s	CAPACITOR,CERAMIC 0.1MF/25V F
C186	1-162-970-11	s	CAPACITOR CERAMIC 0.01MF/25V B
C187	1-162-970-11	s	CAPACITOR CERAMIC 0.01MF/25V B

(RP-120 BOARD (for DSR-1800/P))

Ref. No. or Q'ty	Part No.	SP	Description
C188	1-164-156-11	s	CAPACITOR,CERAMIC 0.1MF/25V F
C189	1-164-156-11	s	CAPACITOR,CERAMIC 0.1MF/25V F
C190	1-162-923-11	s	CAPACITOR,CERAMIC 47PF/50V CH
C191	1-113-985-11	s	CAPACITOR,TANTALUM 10MF/20V
C192	1-164-156-11	s	CAPACITOR,CERAMIC 0.1MF/25V F
C200	1-164-156-11	s	CAPACITOR,CERAMIC 0.1MF/25V F
C201	1-164-156-11	s	CAPACITOR,CERAMIC 0.1MF/25V F
C202	1-164-156-11	s	CAPACITOR,CERAMIC 0.1MF/25V F
C203	1-164-156-11	s	CAPACITOR,CERAMIC 0.1MF/25V F
C204	1-104-851-11	s	CAPACITOR,TANTALUM 10MF/10V
C205	1-164-156-11	s	CAPACITOR,CERAMIC 0.1MF/25V F
C206	1-164-156-11	s	CAPACITOR,CERAMIC 0.1MF/25V F
C207	1-162-923-11	s	CAPACITOR,CERAMIC 47PF/50V CH
C208	1-162-969-11	s	CAPACITOR,CERAMIC 6800PF/25V B
C209	1-162-969-11	s	CAPACITOR,CERAMIC 6800PF/25V B
C210	1-162-969-11	s	CAPACITOR,CERAMIC 6800PF/25V B
C211	1-164-156-11	s	CAPACITOR,CERAMIC 0.1MF/25V F
C212	1-164-156-11	s	CAPACITOR,CERAMIC 0.1MF/25V F
C213	1-164-156-11	s	CAPACITOR,CERAMIC 0.1MF/25V F
C214	1-162-923-11	s	CAPACITOR,CERAMIC 47PF/50V CH
C216	1-162-923-11	s	CAPACITOR,CERAMIC 47PF/50V CH
C218	1-162-925-11	s	CAPACITOR,CERAMIC 68PF/50V CH
C219	1-164-156-11	s	CAPACITOR,CERAMIC 0.1MF/25V F
C220	1-164-156-11	s	CAPACITOR,CERAMIC 0.1MF/25V F
C221	1-125-891-11	s	CAPACITOR CERAMIC 0.47MF/10V
C222	1-125-891-11	s	CAPACITOR CERAMIC 0.47MF/10V
C223	1-125-891-11	s	CAPACITOR CERAMIC 0.47MF/10V
C224	1-125-891-11	s	CAPACITOR CERAMIC 0.47MF/10V
C225	1-162-958-11	s	CAPACITOR,CERAMIC 270PF/50V SL
C226	1-164-156-11	s	CAPACITOR,CERAMIC 0.1MF/25V F
C227	1-164-156-11	s	CAPACITOR,CERAMIC 0.1MF/25V F
C228	1-164-156-11	s	CAPACITOR,CERAMIC 0.1MF/25V F
C229	1-164-156-11	s	CAPACITOR,CERAMIC 0.1MF/25V F
C230	1-164-156-11	s	CAPACITOR,CERAMIC 0.1MF/25V F
C231	1-164-156-11	s	CAPACITOR,CERAMIC 0.1MF/25V F
C232	1-164-156-11	s	CAPACITOR,CERAMIC 0.1MF/25V F
C235	1-162-923-11	s	CAPACITOR,CERAMIC 47PF/50V CH
C236	1-125-891-11	s	CAPACITOR CERAMIC 0.47MF/10V
C237	1-125-891-11	s	CAPACITOR CERAMIC 0.47MF/10V
C238	1-125-891-11	s	CAPACITOR CERAMIC 0.47MF/10V
C239	1-125-891-11	s	CAPACITOR CERAMIC 0.47MF/10V
C240	1-113-985-11	s	CAPACITOR,TANTALUM 10MF/20V
C241	1-164-156-11	s	CAPACITOR,CERAMIC 0.1MF/25V F
C300	1-113-985-11	s	CAPACITOR,TANTALUM 10MF/20V
C301	1-164-156-11	s	CAPACITOR,CERAMIC 0.1MF/25V F
C302	1-104-851-11	s	CAPACITOR,TANTALUM 10MF/10V
C303	1-164-156-11	s	CAPACITOR,CERAMIC 0.1MF/25V F
C305	1-164-315-11	s	CAPACITOR,CERAMIC 470PF/50V CH
C306	1-115-416-11	s	CAPACITOR,CERAMIC 1000PF/25V
C307	1-164-156-11	s	CAPACITOR,CERAMIC 0.1MF/25V F
C308	1-113-985-11	s	CAPACITOR,TANTALUM 10MF/20V
C309	1-164-156-11	s	CAPACITOR,CERAMIC 0.1MF/25V F
C310	1-164-156-11	s	CAPACITOR,CERAMIC 0.1MF/25V F
C311	1-164-156-11	s	CAPACITOR,CERAMIC 0.1MF/25V F
C312	1-164-156-11	s	CAPACITOR,CERAMIC 0.1MF/25V F
C313	1-164-156-11	s	CAPACITOR,CERAMIC 0.1MF/25V F
C314	1-162-927-11	s	CAPACITOR,CERAMIC 100PF/50V CH
C315	1-162-923-11	s	CAPACITOR,CERAMIC 47PF/50V CH
C316	1-115-416-11	s	CAPACITOR,CERAMIC 1000PF/25V

(RP-120 BOARD (for DSR-1800/P))

Ref. No. or Q'ty	Part No.	SP	Description
C317	1-162-964-11	s	CAPACITOR,CERAMIC 1000PF/50V B
C318	1-162-970-11	s	CAPACITOR CERAMIC 0.01MF/25V B
C319	1-162-970-11	s	CAPACITOR CERAMIC 0.01MF/25V B
C320	1-162-970-11	s	CAPACITOR CERAMIC 0.01MF/25V B
C321	1-162-913-11	s	CAPACITOR,CHIP CERAMIC 8PF/50V
C322	1-164-156-11	s	CAPACITOR,CERAMIC 0.1MF/25V F
C323	1-162-964-11	s	CAPACITOR,CERAMIC 1000PF/50V B
C325	1-162-970-11	s	CAPACITOR CERAMIC 0.01MF/25V B
C326	1-162-964-11	s	CAPACITOR,CERAMIC 1000PF/50V B
C327	1-162-970-11	s	CAPACITOR CERAMIC 0.01MF/25V B
C328	1-162-970-11	s	CAPACITOR CERAMIC 0.01MF/25V B
C329	1-162-964-11	s	CAPACITOR,CERAMIC 1000PF/50V B
C330	1-162-964-11	s	CAPACITOR,CERAMIC 1000PF/50V B
C332	1-162-970-11	s	CAPACITOR CERAMIC 0.01MF/25V B
C333	1-162-970-11	s	CAPACITOR CERAMIC 0.01MF/25V B
C334	1-104-851-11	s	CAPACITOR,TANTALUM 10MF/10V
C335	1-164-156-11	s	CAPACITOR,CERAMIC 0.1MF/25V F
C336	1-164-156-11	s	CAPACITOR,CERAMIC 0.1MF/25V F
C337	1-164-156-11	s	CAPACITOR,CERAMIC 0.1MF/25V F
C338	1-164-217-11	s	CAPACITOR,CERAMIC 150PF/50V CH
C339	1-104-851-11	s	CAPACITOR,TANTALUM 10MF/10V
C340	1-162-970-11	s	CAPACITOR CERAMIC 0.01MF/25V B
C341	1-162-970-11	s	CAPACITOR CERAMIC 0.01MF/25V B
C342	1-164-217-11	s	CAPACITOR,CERAMIC 150PF/50V CH
C343	1-162-970-11	s	CAPACITOR CERAMIC 0.01MF/25V B
C344	1-162-970-11	s	CAPACITOR CERAMIC 0.01MF/25V B
C345	1-162-970-11	s	CAPACITOR CERAMIC 0.01MF/25V B
C346	1-162-923-11	s	CAPACITOR,CERAMIC 47PF/50V CH
C347	1-162-970-11	s	CAPACITOR CERAMIC 0.01MF/25V B
C348	1-162-970-11	s	CAPACITOR CERAMIC 0.01MF/25V B
C349	1-162-923-11	s	CAPACITOR,CERAMIC 47PF/50V CH
C350	1-162-966-11	s	CAPACITOR,CERAMIC 2200PF/50V B
C351	1-162-970-11	s	CAPACITOR CERAMIC 0.01MF/25V B
C352	1-162-966-11	s	CAPACITOR,CERAMIC 2200PF/50V B
C353	1-162-970-11	s	CAPACITOR CERAMIC 0.01MF/25V B
C354	1-162-970-11	s	CAPACITOR CERAMIC 0.01MF/25V B
C355	1-162-967-11	s	CAPACITOR,CERAMIC 3300PF/50V B
C356	1-162-967-11	s	CAPACITOR,CERAMIC 3300PF/50V B
C357	1-113-985-11	s	CAPACITOR,TANTALUM 10MF/20V
C358	1-164-156-11	s	CAPACITOR,CERAMIC 0.1MF/25V F
C359	1-164-156-11	s	CAPACITOR,CERAMIC 0.1MF/25V F
C360	1-164-156-11	s	CAPACITOR,CERAMIC 0.1MF/25V F
C361	1-104-851-11	s	CAPACITOR,TANTALUM 10MF/10V
C362	1-164-156-11	s	CAPACITOR,CERAMIC 0.1MF/25V F
C365	1-162-970-11	s	CAPACITOR CERAMIC 0.01MF/25V B
C366	1-162-970-11	s	CAPACITOR CERAMIC 0.01MF/25V B
C370	1-164-156-11	s	CAPACITOR,CERAMIC 0.1MF/25V F
C371	1-164-156-11	s	CAPACITOR,CERAMIC 0.1MF/25V F
C380	1-107-826-11	s	CAPACITOR,CHIP CERAMIC 0.1MF
C381	1-107-826-11	s	CAPACITOR,CHIP CERAMIC 0.1MF
C382	1-107-826-11	s	CAPACITOR,CHIP CERAMIC 0.1MF
C383	1-107-826-11	s	CAPACITOR,CHIP CERAMIC 0.1MF
C384	1-107-826-11	s	CAPACITOR,CHIP CERAMIC 0.1MF
C385	1-107-826-11	s	CAPACITOR,CHIP CERAMIC 0.1MF
C386	1-107-826-11	s	CAPACITOR,CHIP CERAMIC 0.1MF
C400	1-113-985-11	s	CAPACITOR,TANTALUM 10MF/20V
C401	1-164-156-11	s	CAPACITOR,CERAMIC 0.1MF/25V F
C402	1-104-851-11	s	CAPACITOR,TANTALUM 10MF/10V
C403	1-164-156-11	s	CAPACITOR,CERAMIC 0.1MF/25V F

(RP-120 BOARD (for DSR-1800/P))

Ref. No. or Q'ty	Part No.	SP	Description
C405	1-164-315-11	s	CAPACITOR,CERAMIC 470PF/50V CH
C406	1-115-416-11	s	CAPACITOR,CERAMIC 1000PF/25V
C407	1-164-156-11	s	CAPACITOR,CERAMIC 0.1MF/25V F
C408	1-113-985-11	s	CAPACITOR,TANTALUM 10MF/20V
C409	1-164-156-11	s	CAPACITOR,CERAMIC 0.1MF/25V F
C410	1-164-156-11	s	CAPACITOR,CERAMIC 0.1MF/25V F
C411	1-164-156-11	s	CAPACITOR,CERAMIC 0.1MF/25V F
C412	1-164-156-11	s	CAPACITOR,CERAMIC 0.1MF/25V F
C413	1-164-156-11	s	CAPACITOR,CERAMIC 0.1MF/25V F
C414	1-162-927-11	s	CAPACITOR,CERAMIC 100PF/50V CH
C415	1-162-923-11	s	CAPACITOR,CERAMIC 47PF/50V CH
C416	1-115-416-11	s	CAPACITOR,CERAMIC 1000PF/25V
C417	1-162-964-11	s	CAPACITOR,CERAMIC 1000PF/50V B
C418	1-162-970-11	s	CAPACITOR CERAMIC 0.01MF/25V B
C419	1-162-970-11	s	CAPACITOR CERAMIC 0.01MF/25V B
C420	1-162-970-11	s	CAPACITOR CERAMIC 0.01MF/25V B
C421	1-162-913-11	s	CAPACITOR,CHIP CERAMIC 8PF/50V
C422	1-164-156-11	s	CAPACITOR,CERAMIC 0.1MF/25V F
C423	1-162-964-11	s	CAPACITOR,CERAMIC 1000PF/50V B
C425	1-162-970-11	s	CAPACITOR CERAMIC 0.01MF/25V B
C426	1-162-964-11	s	CAPACITOR,CERAMIC 1000PF/50V B
C427	1-162-970-11	s	CAPACITOR CERAMIC 0.01MF/25V B
C428	1-162-970-11	s	CAPACITOR CERAMIC 0.01MF/25V B
C429	1-162-964-11	s	CAPACITOR,CERAMIC 1000PF/50V B
C430	1-162-964-11	s	CAPACITOR,CERAMIC 1000PF/50V B
C432	1-162-970-11	s	CAPACITOR CERAMIC 0.01MF/25V B
C433	1-162-970-11	s	CAPACITOR CERAMIC 0.01MF/25V B
C434	1-104-851-11	s	CAPACITOR,TANTALUM 10MF/10V
C435	1-164-156-11	s	CAPACITOR,CERAMIC 0.1MF/25V F
C436	1-164-156-11	s	CAPACITOR,CERAMIC 0.1MF/25V F
C437	1-164-156-11	s	CAPACITOR,CERAMIC 0.1MF/25V F
C438	1-164-217-11	s	CAPACITOR,CERAMIC 150PF/50V CH
C439	1-104-851-11	s	CAPACITOR,TANTALUM 10MF/10V
C440	1-162-970-11	s	CAPACITOR CERAMIC 0.01MF/25V B
C441	1-162-970-11	s	CAPACITOR CERAMIC 0.01MF/25V B
C442	1-164-217-11	s	CAPACITOR,CERAMIC 150PF/50V CH
C443	1-162-970-11	s	CAPACITOR CERAMIC 0.01MF/25V B
C444	1-162-970-11	s	CAPACITOR CERAMIC 0.01MF/25V B
C445	1-162-970-11	s	CAPACITOR CERAMIC 0.01MF/25V B
C446	1-162-923-11	s	CAPACITOR,CERAMIC 47PF/50V CH
C447	1-162-970-11	s	CAPACITOR CERAMIC 0.01MF/25V B
C448	1-162-970-11	s	CAPACITOR CERAMIC 0.01MF/25V B
C449	1-162-923-11	s	CAPACITOR,CERAMIC 47PF/50V CH
C450	1-162-966-11	s	CAPACITOR,CERAMIC 2200PF/50V B
C451	1-162-970-11	s	CAPACITOR CERAMIC 0.01MF/25V B
C452	1-162-966-11	s	CAPACITOR,CERAMIC 2200PF/50V B
C453	1-162-970-11	s	CAPACITOR CERAMIC 0.01MF/25V B
C454	1-162-970-11	s	CAPACITOR CERAMIC 0.01MF/25V B
C455	1-162-967-11	s	CAPACITOR,CERAMIC 3300PF/50V B
C456	1-162-967-11	s	CAPACITOR,CERAMIC 3300PF/50V B
C457	1-113-985-11	s	CAPACITOR,TANTALUM 10MF/20V
C458	1-164-156-11	s	CAPACITOR,CERAMIC 0.1MF/25V F
C459	1-164-156-11	s	CAPACITOR,CERAMIC 0.1MF/25V F
C460	1-164-156-11	s	CAPACITOR,CERAMIC 0.1MF/25V F
C461	1-104-851-11	s	CAPACITOR,TANTALUM 10MF/10V
C462	1-164-156-11	s	CAPACITOR,CERAMIC 0.1MF/25V F
C465	1-162-970-11	s	CAPACITOR CERAMIC 0.01MF/25V B
C466	1-162-970-11	s	CAPACITOR CERAMIC 0.01MF/25V B
C480	1-107-826-11	s	CAPACITOR,CHIP CERAMIC 0.1MF

(RP-120 BOARD (for DSR-1800/P))

Ref. No. or Q'ty	Part No.	SP	Description
C481	1-107-826-11	s	CAPACITOR,CHIP CERAMIC 0.1MF
C482	1-107-826-11	s	CAPACITOR,CHIP CERAMIC 0.1MF
C483	1-107-826-11	s	CAPACITOR,CHIP CERAMIC 0.1MF
C484	1-107-826-11	s	CAPACITOR,CHIP CERAMIC 0.1MF
C485	1-107-826-11	s	CAPACITOR,CHIP CERAMIC 0.1MF
C486	1-107-826-11	s	CAPACITOR,CHIP CERAMIC 0.1MF
C500	1-113-985-11	s	CAPACITOR,TANTALUM 10MF/20V
C501	1-164-156-11	s	CAPACITOR,CERAMIC 0.1MF/25V F
C502	1-104-851-11	s	CAPACITOR,TANTALUM 10MF/10V
C503	1-164-156-11	s	CAPACITOR,CERAMIC 0.1MF/25V F
C505	1-164-315-11	s	CAPACITOR,CERAMIC 470PF/50V CH
C506	1-115-416-11	s	CAPACITOR,CERAMIC 1000PF/25V
C507	1-164-156-11	s	CAPACITOR,CERAMIC 0.1MF/25V F
C508	1-113-985-11	s	CAPACITOR,TANTALUM 10MF/20V
C509	1-164-156-11	s	CAPACITOR,CERAMIC 0.1MF/25V F
C510	1-164-156-11	s	CAPACITOR,CERAMIC 0.1MF/25V F
C511	1-164-156-11	s	CAPACITOR,CERAMIC 0.1MF/25V F
C512	1-164-156-11	s	CAPACITOR,CERAMIC 0.1MF/25V F
C513	1-164-156-11	s	CAPACITOR,CERAMIC 0.1MF/25V F
C514	1-162-927-11	s	CAPACITOR,CERAMIC 100PF/50V CH
C515	1-162-923-11	s	CAPACITOR,CERAMIC 47PF/50V CH
C516	1-115-416-11	s	CAPACITOR,CERAMIC 1000PF/25V
C517	1-162-964-11	s	CAPACITOR,CERAMIC 1000PF/50V B
C518	1-162-970-11	s	CAPACITOR CERAMIC 0.01MF/25V B
C519	1-162-970-11	s	CAPACITOR CERAMIC 0.01MF/25V B
C520	1-162-970-11	s	CAPACITOR CERAMIC 0.01MF/25V B
C521	1-162-925-11	s	CAPACITOR,CERAMIC 68PF/50V CH
C522	1-164-156-11	s	CAPACITOR,CERAMIC 0.1MF/25V F
C523	1-162-964-11	s	CAPACITOR,CERAMIC 1000PF/50V B
C525	1-162-970-11	s	CAPACITOR CERAMIC 0.01MF/25V B
C526	1-162-964-11	s	CAPACITOR,CERAMIC 1000PF/50V B
C527	1-162-970-11	s	CAPACITOR CERAMIC 0.01MF/25V B
C528	1-162-970-11	s	CAPACITOR CERAMIC 0.01MF/25V B
C529	1-162-964-11	s	CAPACITOR,CERAMIC 1000PF/50V B
C530	1-162-964-11	s	CAPACITOR,CERAMIC 1000PF/50V B
C532	1-162-970-11	s	CAPACITOR CERAMIC 0.01MF/25V B
C533	1-162-970-11	s	CAPACITOR CERAMIC 0.01MF/25V B
C534	1-104-851-11	s	CAPACITOR,TANTALUM 10MF/10V
C535	1-164-156-11	s	CAPACITOR,CERAMIC 0.1MF/25V F
C536	1-164-156-11	s	CAPACITOR,CERAMIC 0.1MF/25V F
C537	1-164-156-11	s	CAPACITOR,CERAMIC 0.1MF/25V F
C538	1-164-217-11	s	CAPACITOR,CERAMIC 150PF/50V CH
C539	1-104-851-11	s	CAPACITOR,TANTALUM 10MF/10V
C540	1-162-970-11	s	CAPACITOR CERAMIC 0.01MF/25V B
C541	1-162-970-11	s	CAPACITOR CERAMIC 0.01MF/25V B
C542	1-164-217-11	s	CAPACITOR,CERAMIC 150PF/50V CH
C543	1-162-970-11	s	CAPACITOR CERAMIC 0.01MF/25V B
C544	1-162-970-11	s	CAPACITOR CERAMIC 0.01MF/25V B
C545	1-162-970-11	s	CAPACITOR CERAMIC 0.01MF/25V B
C546	1-162-923-11	s	CAPACITOR,CERAMIC 47PF/50V CH
C547	1-162-970-11	s	CAPACITOR CERAMIC 0.01MF/25V B
C548	1-162-970-11	s	CAPACITOR CERAMIC 0.01MF/25V B
C549	1-162-923-11	s	CAPACITOR,CERAMIC 47PF/50V CH
C550	1-162-966-11	s	CAPACITOR,CERAMIC 2200PF/50V B
C551	1-162-970-11	s	CAPACITOR CERAMIC 0.01MF/25V B
C552	1-162-966-11	s	CAPACITOR,CERAMIC 2200PF/50V B
C553	1-162-970-11	s	CAPACITOR CERAMIC 0.01MF/25V B
C554	1-162-970-11	s	CAPACITOR CERAMIC 0.01MF/25V B
C555	1-162-967-11	s	CAPACITOR,CERAMIC 3300PF/50V B

(RP-120 BOARD (for DSR-1800/P))

Ref. No. or Q'ty	Part No.	SP	Description
C556	1-162-967-11	s	CAPACITOR,CERAMIC 3300PF/50V B
C557	1-113-985-11	s	CAPACITOR,TANTALUM 10MF/20V
C558	1-164-156-11	s	CAPACITOR,CERAMIC 0.1MF/25V F
C559	1-164-156-11	s	CAPACITOR,CERAMIC 0.1MF/25V F
C560	1-164-156-11	s	CAPACITOR,CERAMIC 0.1MF/25V F
C561	1-104-851-11	s	CAPACITOR,TANTALUM 10MF/10V
C562	1-164-156-11	s	CAPACITOR,CERAMIC 0.1MF/25V F
C563	1-164-156-11	s	CAPACITOR,CERAMIC 0.1MF/25V F
C580	1-107-826-11	s	CAPACITOR,CHIP CERAMIC 0.1MF
C581	1-107-826-11	s	CAPACITOR,CHIP CERAMIC 0.1MF
C582	1-107-826-11	s	CAPACITOR,CHIP CERAMIC 0.1MF
C583	1-107-826-11	s	CAPACITOR,CHIP CERAMIC 0.1MF
C584	1-107-826-11	s	CAPACITOR,CHIP CERAMIC 0.1MF
C585	1-107-826-11	s	CAPACITOR,CHIP CERAMIC 0.1MF
C586	1-107-826-11	s	CAPACITOR,CHIP CERAMIC 0.1MF
C600	1-162-970-11	s	CAPACITOR CERAMIC 0.01MF/25V B
C601	1-104-851-11	s	CAPACITOR,TANTALUM 10MF/10V
C602	1-164-156-11	s	CAPACITOR,CERAMIC 0.1MF/25V F
C603	1-164-156-11	s	CAPACITOR,CERAMIC 0.1MF/25V F
C604	1-164-156-11	s	CAPACITOR,CERAMIC 0.1MF/25V F
C605	1-164-156-11	s	CAPACITOR,CERAMIC 0.1MF/25V F
C606	1-164-156-11	s	CAPACITOR,CERAMIC 0.1MF/25V F
C607	1-164-156-11	s	CAPACITOR,CERAMIC 0.1MF/25V F
C608	1-164-156-11	s	CAPACITOR,CERAMIC 0.1MF/25V F
C609	1-164-156-11	s	CAPACITOR,CERAMIC 0.1MF/25V F
C610	1-164-156-11	s	CAPACITOR,CERAMIC 0.1MF/25V F
C611	1-164-156-11	s	CAPACITOR,CERAMIC 0.1MF/25V F
C612	1-164-156-11	s	CAPACITOR,CERAMIC 0.1MF/25V F
C613	1-104-851-11	s	CAPACITOR,TANTALUM 10MF/10V
C614	1-164-156-11	s	CAPACITOR,CERAMIC 0.1MF/25V F
C615	1-164-156-11	s	CAPACITOR,CERAMIC 0.1MF/25V F
C616	1-164-156-11	s	CAPACITOR,CERAMIC 0.1MF/25V F
C617	1-104-851-11	s	CAPACITOR,TANTALUM 10MF/10V
C618 *1	1-164-156-11	s	CAPACITOR,CERAMIC 0.1MF/25V F
C650	1-162-970-11	s	CAPACITOR CERAMIC 0.01MF/25V B
C651	1-104-851-11	s	CAPACITOR,TANTALUM 10MF/10V
C652	1-164-156-11	s	CAPACITOR,CERAMIC 0.1MF/25V F
C653	1-164-156-11	s	CAPACITOR,CERAMIC 0.1MF/25V F
C654	1-164-156-11	s	CAPACITOR,CERAMIC 0.1MF/25V F
C655	1-164-156-11	s	CAPACITOR,CERAMIC 0.1MF/25V F
C656	1-164-156-11	s	CAPACITOR,CERAMIC 0.1MF/25V F
C657	1-164-156-11	s	CAPACITOR,CERAMIC 0.1MF/25V F
C658	1-164-156-11	s	CAPACITOR,CERAMIC 0.1MF/25V F
C659	1-162-970-11	s	CAPACITOR CERAMIC 0.01MF/25V B
C660	1-164-156-11	s	CAPACITOR,CERAMIC 0.1MF/25V F
C661	1-164-156-11	s	CAPACITOR,CERAMIC 0.1MF/25V F
C662	1-164-156-11	s	CAPACITOR,CERAMIC 0.1MF/25V F
C663	1-164-156-11	s	CAPACITOR,CERAMIC 0.1MF/25V F
C664	1-104-851-11	s	CAPACITOR,TANTALUM 10MF/10V
C665	1-164-156-11	s	CAPACITOR,CERAMIC 0.1MF/25V F
C666	1-164-156-11	s	CAPACITOR,CERAMIC 0.1MF/25V F
C667	1-164-156-11	s	CAPACITOR,CERAMIC 0.1MF/25V F
C668 *1	1-164-156-11	s	CAPACITOR,CERAMIC 0.1MF/25V F
C700	1-162-970-11	s	CAPACITOR CERAMIC 0.01MF/25V B
C701	1-104-851-11	s	CAPACITOR,TANTALUM 10MF/10V
C702	1-164-156-11	s	CAPACITOR,CERAMIC 0.1MF/25V F
C703	1-164-156-11	s	CAPACITOR,CERAMIC 0.1MF/25V F
C704	1-164-156-11	s	CAPACITOR,CERAMIC 0.1MF/25V F
C705	1-164-156-11	s	CAPACITOR,CERAMIC 0.1MF/25V F

(RP-120 BOARD (for DSR-1800/P))

Ref. No. or Q'ty	Part No.	SP	Description
C706	1-164-156-11	s	CAPACITOR,CERAMIC 0.1MF/25V F
C707	1-164-156-11	s	CAPACITOR,CERAMIC 0.1MF/25V F
C708	1-164-156-11	s	CAPACITOR,CERAMIC 0.1MF/25V F
C709	1-164-156-11	s	CAPACITOR,CERAMIC 0.1MF/25V F
C710	1-164-156-11	s	CAPACITOR,CERAMIC 0.1MF/25V F
C711	1-164-156-11	s	CAPACITOR,CERAMIC 0.1MF/25V F
C712	1-104-851-11	s	CAPACITOR,TANTALUM 10MF/10V
C713	1-164-156-11	s	CAPACITOR,CERAMIC 0.1MF/25V F
C714	1-164-156-11	s	CAPACITOR,CERAMIC 0.1MF/25V F
C800	1-164-156-11	s	CAPACITOR,CERAMIC 0.1MF/25V F
C801	1-164-156-11	s	CAPACITOR,CERAMIC 0.1MF/25V F
C802	1-164-156-11	s	CAPACITOR,CERAMIC 0.1MF/25V F
C803	1-164-156-11	s	CAPACITOR,CERAMIC 0.1MF/25V F
C804	1-164-156-11	s	CAPACITOR,CERAMIC 0.1MF/25V F
C805	1-113-985-11	s	CAPACITOR,TANTALUM 10MF/20V
C806	1-113-985-11	s	CAPACITOR,TANTALUM 10MF/20V
C807	1-113-985-11	s	CAPACITOR,TANTALUM 10MF/20V
C808	1-113-985-11	s	CAPACITOR,TANTALUM 10MF/20V
C809	1-113-985-11	s	CAPACITOR,TANTALUM 10MF/20V
C810	1-104-851-11	s	CAPACITOR,TANTALUM 10MF/10V
C811	1-164-156-11	s	CAPACITOR,CERAMIC 0.1MF/25V F
C812	1-104-851-11	s	CAPACITOR,TANTALUM 10MF/10V
C813	1-164-156-11	s	CAPACITOR,CERAMIC 0.1MF/25V F
C814	1-104-851-11	s	CAPACITOR,TANTALUM 10MF/10V
C815	1-164-156-11	s	CAPACITOR,CERAMIC 0.1MF/25V F
C816	1-164-156-11	s	CAPACITOR,CERAMIC 0.1MF/25V F
C817	1-113-985-11	s	CAPACITOR,TANTALUM 10MF/20V
C818	1-164-156-11	s	CAPACITOR,CERAMIC 0.1MF/25V F
C819	1-113-985-11	s	CAPACITOR,TANTALUM 10MF/20V
C820	1-164-156-11	s	CAPACITOR,CERAMIC 0.1MF/25V F
C821	1-164-156-11	s	CAPACITOR,CERAMIC 0.1MF/25V F
C822	1-164-156-11	s	CAPACITOR,CERAMIC 0.1MF/25V F
C823	1-164-156-11	s	CAPACITOR,CERAMIC 0.1MF/25V F
C824	1-164-156-11	s	CAPACITOR,CERAMIC 0.1MF/25V F
C825	1-164-156-11	s	CAPACITOR,CERAMIC 0.1MF/25V F
C826	1-164-156-11	s	CAPACITOR,CERAMIC 0.1MF/25V F
C827	1-113-985-11	s	CAPACITOR,TANTALUM 10MF/20V
C830	1-164-156-11	s	CAPACITOR,CERAMIC 0.1MF/25V F
C831	1-164-156-11	s	CAPACITOR,CERAMIC 0.1MF/25V F
C900	1-113-985-11	s	CAPACITOR,TANTALUM 10MF/20V
C901	1-164-156-11	s	CAPACITOR,CERAMIC 0.1MF/25V F
C902	1-164-230-11	s	CAPACITOR,CERAMIC 220PF/50V
C903	1-164-230-11	s	CAPACITOR,CERAMIC 220PF/50V
C904	1-162-970-11	s	CAPACITOR CERAMIC 0.01MF/25V B
C905	1-162-970-11	s	CAPACITOR CERAMIC 0.01MF/25V B
C906	1-162-970-11	s	CAPACITOR CERAMIC 0.01MF/25V B
C907	1-162-970-11	s	CAPACITOR CERAMIC 0.01MF/25V B
C908	1-162-970-11	s	CAPACITOR CERAMIC 0.01MF/25V B
C909	1-162-966-11	s	CAPACITOR,CERAMIC 2200PF/50V B
C910	1-162-927-11	s	CAPACITOR,CERAMIC 100PF/50V CH
C911	1-104-851-11	s	CAPACITOR,TANTALUM 10MF/10V
C912	1-162-970-11	s	CAPACITOR CERAMIC 0.01MF/25V B
C913	1-164-156-11	s	CAPACITOR,CERAMIC 0.1MF/25V F
C930	1-113-985-11	s	CAPACITOR,TANTALUM 10MF/20V
C931	1-164-156-11	s	CAPACITOR,CERAMIC 0.1MF/25V F
C932	1-164-230-11	s	CAPACITOR,CERAMIC 220PF/50V
C933	1-164-230-11	s	CAPACITOR,CERAMIC 220PF/50V
C934	1-162-970-11	s	CAPACITOR CERAMIC 0.01MF/25V B
C935	1-162-970-11	s	CAPACITOR CERAMIC 0.01MF/25V B

(RP-120 BOARD (for DSR-1800/P))

Ref. No. or Q'ty	Part No.	SP	Description	
C936	1-162-970-11	s	CAPACITOR CERAMIC 0.01MF/25V B	
C937	1-162-970-11	s	CAPACITOR CERAMIC 0.01MF/25V B	
C938	1-162-970-11	s	CAPACITOR CERAMIC 0.01MF/25V B	
C939	1-162-966-11	s	CAPACITOR,CERAMIC 2200PF/50V B	
C940	1-162-927-11	s	CAPACITOR,CERAMIC 100PF/50V CH	
C941	1-104-851-11	s	CAPACITOR,TANTALUM 10MF/10V	
C942	1-162-970-11	s	CAPACITOR CERAMIC 0.01MF/25V B	
C943	1-164-156-11	s	CAPACITOR,CERAMIC 0.1MF/25V F	
C950	1-164-156-11	s	CAPACITOR,CERAMIC 0.1MF/25V F	
C951	1-104-851-11	s	CAPACITOR,TANTALUM 10MF/10V	
C952	1-164-156-11	s	CAPACITOR,CERAMIC 0.1MF/25V F	
C980	1-164-156-11	s	CAPACITOR,CERAMIC 0.1MF/25V F	
C981	1-164-156-11	s	CAPACITOR,CERAMIC 0.1MF/25V F	
C982	1-164-156-11	s	CAPACITOR,CERAMIC 0.1MF/25V F	
C983	1-164-156-11	s	CAPACITOR,CERAMIC 0.1MF/25V F	
C984	1-164-156-11	s	CAPACITOR,CERAMIC 0.1MF/25V F	
C985	1-164-156-11	s	CAPACITOR,CERAMIC 0.1MF/25V F	
C986	1-164-156-11	s	CAPACITOR,CERAMIC 0.1MF/25V F	
C987	1-164-156-11	s	CAPACITOR,CERAMIC 0.1MF/25V F	
C988	1-164-156-11	s	CAPACITOR,CERAMIC 0.1MF/25V F	
C989	1-164-156-11	s	CAPACITOR,CERAMIC 0.1MF/25V F	
C990	1-164-156-11	s	CAPACITOR,CERAMIC 0.1MF/25V F	
C991	1-164-156-11	s	CAPACITOR,CERAMIC 0.1MF/25V F	
C992	1-164-156-11	s	CAPACITOR,CERAMIC 0.1MF/25V F	
C993	1-164-156-11	s	CAPACITOR,CERAMIC 0.1MF/25V F	
C994	1-104-851-11	s	CAPACITOR,TANTALUM 10MF/10V	
C995	1-164-156-11	s	CAPACITOR,CERAMIC 0.1MF/25V F	
C996	1-164-156-11	s	CAPACITOR,CERAMIC 0.1MF/25V F	
C997	1-164-156-11	s	CAPACITOR,CERAMIC 0.1MF/25V F	
C998	1-164-156-11	s	CAPACITOR,CERAMIC 0.1MF/25V F	
CN1	1-770-297-21	o	HOUSING, CONNECTOR 12P	
CN2	1-770-297-21	o	HOUSING, CONNECTOR 12P	
CN3	1-778-534-11	o	CONNECTOR, FFC (ZIF) 45P	
CN200	1-778-534-11	o	CONNECTOR, FFC (ZIF) 45P	
CN201	1-778-534-11	o	CONNECTOR, FFC (ZIF) 45P	
CN202	1-778-534-11	o	CONNECTOR, FFC (ZIF) 45P	
CN300	1-764-243-11	o	CONNECTOR (COAXIAL)	
CN400	1-764-243-11	o	CONNECTOR (COAXIAL)	
CN500	1-764-243-11	o	CONNECTOR (COAXIAL)	
D1	8-719-027-95	s	DIODE HSM88WK	
D2	8-719-041-39	s	DIODE KV1470	(5MA)
D3	8-719-027-95	s	DIODE HSM88WK	
D4	8-719-041-39	s	DIODE KV1470	(5MA)
D5	8-719-027-95	s	DIODE HSM88WK	
D6	8-719-041-39	s	DIODE KV1470	(5MA)
D100	8-719-052-27	s	DIODE 1SS351-TB	
D150	8-719-052-27	s	DIODE 1SS351-TB	
DL300	1-411-274-21	s	DELAY LINE, LC (23NS)	
DL400	1-411-274-21	s	DELAY LINE, LC (23NS)	
DL500	1-411-274-21	s	DELAY LINE, LC (23NS)	
FL300	1-234-484-21	s	FILTER, LOW PASS	
FL400	1-234-484-21	s	FILTER, LOW PASS	
FL500	1-234-484-21	s	FILTER, LOW PASS	
FL900	1-233-351-21	s	FILTER, BAND PASS	
FL901	1-233-350-21	s	FILTER, BAND PASS	
FL930	1-233-351-21	s	FILTER, BAND PASS	
FL931	1-233-350-21	s	FILTER, BAND PASS	

(RP-120 BOARD (for DSR-1800/P))

Ref. No. or Q'ty	Part No.	SP	Description
IC1	8-759-524-50	s	IC TC74VHC541FT(EL)
IC2	8-752-386-38	s	IC CXD3105R (T6)
IC3	8-759-523-95	s	IC TC74VHC74FT(EL)
IC4	8-759-524-50	s	IC TC74VHC541FT(EL)
IC5	8-752-386-38	s	IC CXD3105R (T6)
IC6	8-759-058-54	s	IC TC7S00FU-TE85R
IC7	8-752-386-38	s	IC CXD3105R (T6)
IC8	8-759-196-96	s	IC TC7SH08FU (TE85R)
IC9	8-759-196-97	s	IC TC7SH32FU (TE85R)
IC10	8-759-196-97	s	IC TC7SH32FU (TE85R)
IC11	8-752-073-50	s	IC CXA2018Q
IC100	8-752-073-50	s	IC CXA2018Q
IC115	8-752-085-28	s	IC CXA3241TN-T2
IC116	8-752-085-28	s	IC CXA3241TN-T2
IC117	8-752-085-28	s	IC CXA3241TN-T2
IC118	8-752-085-27	s	IC CXA3240TN-T2
IC150	8-752-073-50	s	IC CXA2018Q
IC156	8-759-327-60	s	IC TC7W125FU-TE12R
IC165	8-752-085-28	s	IC CXA3241TN-T2
IC166	8-752-085-28	s	IC CXA3241TN-T2
IC167	8-752-085-28	s	IC CXA3241TN-T2
IC168	8-752-085-27	s	IC CXA3240TN-T2
IC200	8-752-085-28	s	IC CXA3241TN-T2
IC201	8-752-085-28	s	IC CXA3241TN-T2
IC202	8-752-085-28	s	IC CXA3241TN-T2
IC203	8-752-085-28	s	IC CXA3241TN-T2
IC204	8-759-523-94	s	IC TC74VHC32FT(EL)
IC205	8-752-085-27	s	IC CXA3240TN-T2
IC206	8-752-085-27	s	IC CXA3240TN-T2
IC207	8-759-548-97	s	IC SN74LV04APWR
IC300	8-752-074-59	s	IC CXA2023R
IC301	8-752-070-12	s	IC CXA1762Q
IC302	8-752-371-18	s	IC CXD2302Q
IC303	8-759-524-50	s	IC TC74VHC541FT(EL)
IC305	8-759-523-81	s	IC TC74VHC08FT(EL)
IC306	8-759-523-96	s	IC TC74VHC86FT (EL)
IC400	8-752-074-59	s	IC CXA2023R
IC401	8-752-070-12	s	IC CXA1762Q
IC402	8-752-371-18	s	IC CXD2302Q
IC403	8-759-524-50	s	IC TC74VHC541FT(EL)
IC500	8-752-074-59	s	IC CXA2023R
IC501	8-752-070-12	s	IC CXA1762Q
IC502	8-752-371-18	s	IC CXD2302Q
IC503	8-759-524-50	s	IC TC74VHC541FT(EL)
IC504	8-759-564-49	s	IC TC7W53FU-TE12R
IC600	8-752-386-38	s	IC CXD3105R (T6)
IC601	8-759-524-50	s	IC TC74VHC541FT(EL)
IC602	8-759-524-50	s	IC TC74VHC541FT(EL)
IC603	8-759-058-54	s	IC TC7S00FU-TE85R
IC604	8-759-523-94	s	IC TC74VHC32FT(EL)
IC605	8-759-524-50	s	IC TC74VHC541FT(EL)
IC606	8-759-196-97	s	IC TC7SH32FU (TE85R)
IC607	8-759-196-97	s	IC TC7SH32FU (TE85R)
IC650	8-752-386-38	s	IC CXD3105R (T6)
IC651	8-759-524-50	s	IC TC74VHC541FT(EL)
IC652	8-759-524-50	s	IC TC74VHC541FT(EL)
IC653	8-759-058-54	s	IC TC7S00FU-TE85R
IC667 *1	8-759-082-58	s	IC TC7W08FU
IC668 *1	8-759-082-57	s	IC TC7W04FU

(RP-120 BOARD (for DSR-1800/P))

Ref. No. or Q'ty	Part No.	SP	Description
IC700	8-752-386-38	s	IC CXD3105R (T6)
IC701	8-759-524-50	s	IC TC74VHC541FT(EL)
IC702	8-759-524-50	s	IC TC74VHC541FT(EL)
IC800	8-759-259-77	s	IC PQ20VZ5U
IC801	8-759-491-47	s	IC TC74VHCT08FT (EL)
IC802	8-759-523-02	s	IC TC74HC4053AFT(EL)
IC803	8-759-259-77	s	IC PQ20VZ5U
IC804	8-759-259-77	s	IC PQ20VZ5U
IC805	8-759-182-84	s	IC PQ05SZ5U
IC806	8-759-182-84	s	IC PQ05SZ5U
IC807	8-759-445-93	s	IC AK6440AM (E2)
IC808	8-759-064-36	s	IC MB88346BPFV
IC809	8-759-064-36	s	IC MB88346BPFV
IC810	8-759-064-36	s	IC MB88346BPFV
IC900	8-759-062-66	s	IC TC7S66F
IC901	8-759-327-00	s	IC CXA8044Q (T4)
IC902	8-759-548-97	s	IC SN74LV04APWR
IC930	8-759-062-66	s	IC TC7S66F
IC931	8-759-327-00	s	IC CXA8044Q (T4)
IC950	8-759-564-49	s	IC TC7W53FU-TE12R
IC952	8-759-196-96	s	IC TC7SH08FU (TE85R)
IC953	8-759-196-96	s	IC TC7SH08FU (TE85R)
IC954	8-759-196-97	s	IC TC7SH32FU (TE85R)
IC981 *1	8-759-196-96	s	IC TC7SH08FU (TE85R)
IC982 *1	8-759-196-96	s	IC TC7SH08FU (TE85R)
IC983 *1	8-759-196-96	s	IC TC7SH08FU (TE85R)
L1	1-414-398-11	s	INDUCTOR (SMD) 10UH
L2	1-414-398-11	s	INDUCTOR (SMD) 10UH
L3	1-412-936-11	s	INDUCTOR CHIP 0.56UH (2520)
L4	1-414-398-11	s	INDUCTOR (SMD) 10UH
L5	1-414-398-11	s	INDUCTOR (SMD) 10UH
L6	1-412-936-11	s	INDUCTOR CHIP 0.56UH (2520)
L7	1-414-398-11	s	INDUCTOR (SMD) 10UH
L8	1-412-936-11	s	INDUCTOR CHIP 0.56UH (2520)
L9	1-414-398-11	s	INDUCTOR (SMD) 10UH
L10	1-414-398-11	s	INDUCTOR (SMD) 10UH
L100	1-414-398-11	s	INDUCTOR (SMD) 10UH
L101	1-414-398-11	s	INDUCTOR (SMD) 10UH
L115	1-414-397-11	s	INDUCTOR (SMD) 6.8UH
L150	1-414-398-11	s	INDUCTOR (SMD) 10UH
L151	1-414-398-11	s	INDUCTOR (SMD) 10UH
L165	1-414-397-11	s	INDUCTOR (SMD) 6.8UH
L200	1-414-398-11	s	INDUCTOR (SMD) 10UH
L201	1-414-397-11	s	INDUCTOR (SMD) 6.8UH
L300	1-414-398-11	s	INDUCTOR (SMD) 10UH
L301	1-414-398-11	s	INDUCTOR (SMD) 10UH
L302	1-414-398-11	s	INDUCTOR (SMD) 10UH
L303	1-410-657-21	s	CHIP INDUCTOR 180UH (3225)
L304	1-410-393-11	s	INDUCTOR,CHIP 100UH (3225)
L305	1-414-398-11	s	INDUCTOR (SMD) 10UH
L306	1-414-398-11	s	INDUCTOR (SMD) 10UH
L307	1-414-398-11	s	INDUCTOR (SMD) 10UH
L308	1-414-398-11	s	INDUCTOR (SMD) 10UH
L400	1-414-398-11	s	INDUCTOR (SMD) 10UH
L401	1-414-398-11	s	INDUCTOR (SMD) 10UH
L402	1-414-398-11	s	INDUCTOR (SMD) 10UH
L403	1-410-657-21	s	CHIP INDUCTOR 180UH (3225)
L404	1-410-393-11	s	INDUCTOR,CHIP 100UH (3225)

(RP-120 BOARD (for DSR-1800/P))

Ref. No. or Q'ty	Part No.	SP	Description
L405	1-414-398-11	s	INDUCTOR (SMD) 10UH
L406	1-414-398-11	s	INDUCTOR (SMD) 10UH
L407	1-414-398-11	s	INDUCTOR (SMD) 10UH
L408	1-414-398-11	s	INDUCTOR (SMD) 10UH
L500	1-414-398-11	s	INDUCTOR (SMD) 10UH
L501	1-414-398-11	s	INDUCTOR (SMD) 10UH
L502	1-414-398-11	s	INDUCTOR (SMD) 10UH
L503	1-410-657-21	s	CHIP INDUCTOR 180UH (3225)
L505	1-414-398-11	s	INDUCTOR (SMD) 10UH
L506	1-414-398-11	s	INDUCTOR (SMD) 10UH
L507	1-414-398-11	s	INDUCTOR (SMD) 10UH
L508	1-414-398-11	s	INDUCTOR (SMD) 10UH
L600	1-414-398-11	s	INDUCTOR (SMD) 10UH
L601	1-414-398-11	s	INDUCTOR (SMD) 10UH
L602	1-414-398-11	s	INDUCTOR (SMD) 10UH
L650	1-414-398-11	s	INDUCTOR (SMD) 10UH
L651	1-414-398-11	s	INDUCTOR (SMD) 10UH
L700	1-414-398-11	s	INDUCTOR (SMD) 10UH
L701	1-414-398-11	s	INDUCTOR (SMD) 10UH
L800	1-424-673-11	s	COIL, CHOKE 4.7UH
L801	1-424-673-11	s	COIL, CHOKE 4.7UH
L802	1-414-398-11	s	INDUCTOR (SMD) 10UH
L900	1-414-398-11	s	INDUCTOR (SMD) 10UH
L901	1-412-282-41	s	INDUCTOR,CHIP 470UH (3225)
L930	1-414-398-11	s	INDUCTOR (SMD) 10UH
L931	1-412-282-41	s	INDUCTOR,CHIP 470UH (3225)
L980	1-414-398-11	s	INDUCTOR (SMD) 10UH
PS800	⚠ 1-533-282-21	s	CIRCUIT PROTECTOR 2A (3225)
PS801	⚠ 1-533-282-21	s	CIRCUIT PROTECTOR 2A (3225)
Q1	1-801-806-11	s	TRANSISTOR DTC144EAK
Q100	8-729-143-46	s	TRANSISTOR 2SC3356-R24
Q150	8-729-143-46	s	TRANSISTOR 2SC3356-R24
Q200	8-729-143-46	s	TRANSISTOR 2SC3356-R24
Q301	8-729-905-35	s	TRANSISTOR 2SC4081-R
Q302	8-729-905-35	s	TRANSISTOR 2SC4081-R
Q303	8-729-905-23	s	TRANSISTOR 2SA1576-R
Q304	8-729-905-35	s	TRANSISTOR 2SC4081-R
Q305	8-729-905-35	s	TRANSISTOR 2SC4081-R
Q306	1-801-806-11	s	TRANSISTOR DTC144EAK
Q307	1-801-806-11	s	TRANSISTOR DTC144EAK
Q308	8-729-041-82	s	TRANSISTOR UPA801T-T1/FB
Q309	8-729-041-82	s	TRANSISTOR UPA801T-T1/FB
Q401	8-729-905-35	s	TRANSISTOR 2SC4081-R
Q402	8-729-905-35	s	TRANSISTOR 2SC4081-R
Q403	8-729-905-23	s	TRANSISTOR 2SA1576-R
Q404	8-729-905-35	s	TRANSISTOR 2SC4081-R
Q405	8-729-905-35	s	TRANSISTOR 2SC4081-R
Q406	1-801-806-11	s	TRANSISTOR DTC144EAK
Q407	1-801-806-11	s	TRANSISTOR DTC144EAK
Q408	8-729-041-82	s	TRANSISTOR UPA801T-T1/FB
Q409	8-729-041-82	s	TRANSISTOR UPA801T-T1/FB
Q501	8-729-905-35	s	TRANSISTOR 2SC4081-R
Q502	8-729-905-35	s	TRANSISTOR 2SC4081-R
Q503	8-729-905-23	s	TRANSISTOR 2SA1576-R
Q504	8-729-905-35	s	TRANSISTOR 2SC4081-R
Q505	8-729-905-35	s	TRANSISTOR 2SC4081-R
Q506	1-801-806-11	s	TRANSISTOR DTC144EAK
Q507	1-801-806-11	s	TRANSISTOR DTC144EAK

(RP-120 BOARD (for DSR-1800/P))

Ref. No. or Q'ty	Part No.	SP	Description
Q508	8-729-041-82	s	TRANSISTOR UPA801T-T1/FB
Q509	8-729-041-82	s	TRANSISTOR UPA801T-T1/FB
Q900	8-729-905-35	s	TRANSISTOR 2SC4081-R
Q901	1-801-806-11	s	TRANSISTOR DTC144EAK
Q930	8-729-905-35	s	TRANSISTOR 2SC4081-R
Q931	1-801-806-11	s	TRANSISTOR DTC144EAK
R1	1-216-801-11	s	RESISTOR,CHIP 22 1/16W (1608)
R2	1-216-801-11	s	RESISTOR,CHIP 22 1/16W (1608)
R3	1-216-809-11	s	RESISTOR,CHIP 100 1/16W 1608
R4	1-216-809-11	s	RESISTOR,CHIP 100 1/16W 1608
R5	1-216-864-11	s	RESISTOR,CHIP 0 1/16W (1608)
R6	1-216-809-11	s	RESISTOR,CHIP 100 1/16W 1608
R7	1-218-871-11	s	RESISTOR,CHIP 10K 1/16W (1608)
R8	1-218-895-11	s	RESISTOR,CHIP 100K 1/16W(1608)
R9	1-216-837-11	s	RESISTOR,CHIP 22K 1/16W 1608
R10	1-216-864-11	s	RESISTOR,CHIP 0 1/16W (1608)
R11	1-216-864-11	s	RESISTOR,CHIP 0 1/16W (1608)
R12	1-216-864-11	s	RESISTOR,CHIP 0 1/16W (1608)
R13	1-216-845-11	s	RESISTOR,CHIP 100K 1/16W(1608)
R14	1-218-887-11	s	RESISTOR,CHIP 47K 1/16W (1608)
R15	1-218-887-11	s	RESISTOR,CHIP 47K 1/16W (1608)
R16	1-218-855-11	s	RESISTOR,CHIP 2.2K 1/16W(1608)
R17	1-216-809-11	s	RESISTOR,CHIP 100 1/16W 1608
R18	1-216-814-11	s	RESISTOR,CHIP 270 1/16W 1608
R19	1-216-801-11	s	RESISTOR,CHIP 22 1/16W (1608)
R20	1-216-801-11	s	RESISTOR,CHIP 22 1/16W (1608)
R21	1-216-809-11	s	RESISTOR,CHIP 100 1/16W 1608
R22	1-218-871-11	s	RESISTOR,CHIP 10K 1/16W (1608)
R23	1-218-895-11	s	RESISTOR,CHIP 100K 1/16W(1608)
R24	1-216-864-11	s	RESISTOR,CHIP 0 1/16W (1608)
R25	1-216-864-11	s	RESISTOR,CHIP 0 1/16W (1608)
R26	1-216-864-11	s	RESISTOR,CHIP 0 1/16W (1608)
R27	1-216-845-11	s	RESISTOR,CHIP 100K 1/16W(1608)
R28	1-216-864-11	s	RESISTOR,CHIP 0 1/16W (1608)
R29	1-218-887-11	s	RESISTOR,CHIP 47K 1/16W (1608)
R30	1-218-887-11	s	RESISTOR,CHIP 47K 1/16W (1608)
R31	1-216-864-11	s	RESISTOR,CHIP 0 1/16W (1608)
R32	1-218-855-11	s	RESISTOR,CHIP 2.2K 1/16W(1608)
R33	1-216-809-11	s	RESISTOR,CHIP 100 1/16W 1608
R34	1-216-814-11	s	RESISTOR,CHIP 270 1/16W 1608
R35	1-216-809-11	s	RESISTOR,CHIP 100 1/16W 1608
R36	1-216-833-11	s	RESISTOR,CHIP 10K 1/16W (1608)
R37	1-216-864-11	s	RESISTOR,CHIP 0 1/16W (1608)
R38	1-216-864-11	s	RESISTOR,CHIP 0 1/16W (1608)
R39	1-216-833-11	s	RESISTOR,CHIP 10K 1/16W (1608)
R40	1-216-864-11	s	RESISTOR,CHIP 0 1/16W (1608)
R41	1-216-845-11	s	RESISTOR,CHIP 100K 1/16W(1608)
R42	1-216-864-11	s	RESISTOR,CHIP 0 1/16W (1608)
R43	1-216-864-11	s	RESISTOR,CHIP 0 1/16W (1608)
R44	1-218-887-11	s	RESISTOR,CHIP 47K 1/16W (1608)
R45	1-218-887-11	s	RESISTOR,CHIP 47K 1/16W (1608)
R46	1-216-809-11	s	RESISTOR,CHIP 100 1/16W 1608
R47	1-218-855-11	s	RESISTOR,CHIP 2.2K 1/16W(1608)
R48	1-216-814-11	s	RESISTOR,CHIP 270 1/16W 1608
R49	1-216-809-11	s	RESISTOR,CHIP 100 1/16W 1608
R50	1-216-809-11	s	RESISTOR,CHIP 100 1/16W 1608
R51	1-216-833-11	s	RESISTOR,CHIP 10K 1/16W (1608)
R52	1-216-833-11	s	RESISTOR,CHIP 10K 1/16W (1608)

(RP-120 BOARD (for DSR-1800/P))

Ref. No. or Q'ty	Part No.	SP	Description
R53	1-216-833-11	s	RESISTOR,CHIP 10K 1/16W (1608)
R54	1-218-867-11	s	RESISTOR,CHIP 6.8K 1/16W(1608)
R55	1-216-864-11	s	RESISTOR,CHIP 0 1/16W (1608)
R56	1-216-864-11	s	RESISTOR,CHIP 0 1/16W (1608)
R100	1-216-809-11	s	RESISTOR,CHIP 100 1/16W 1608
R101	1-216-809-11	s	RESISTOR,CHIP 100 1/16W 1608
R102	1-216-829-11	s	RESISTOR,CHIP 4.7K 1/16W(1608)
R103	1-216-833-11	s	RESISTOR,CHIP 10K 1/16W (1608)
R104	1-218-871-11	s	RESISTOR,CHIP 10K 1/16W (1608)
R105	1-218-867-11	s	RESISTOR,CHIP 6.8K 1/16W(1608)
R106	1-218-879-11	s	RESISTOR,CHIP 22K 1/16W (1608)
R107	1-218-853-11	s	RESISTOR,CHIP 1.8K 1/16W(1608)
R108	1-216-834-11	s	RESISTOR,CHIP 12K 1/16W 1608
R109	1-218-867-11	s	RESISTOR,CHIP 6.8K 1/16W(1608)
R110	1-218-835-11	s	RESISTOR,CHIP 330 1/16W (1608)
R111	1-218-837-11	s	RESISTOR,CHIP 390 1/16W (1608)
R112	1-216-864-11	s	RESISTOR,CHIP 0 1/16W (1608)
R115	1-211-985-11	s	RESISTOR,CHIP 47 1/16W (1608)
R116	1-216-821-11	s	RESISTOR,CHIP 1.0K 1/16W(1608)
R117	1-216-797-11	s	RESISTOR,CHIP 10 1/16W 1608
R118	1-216-797-11	s	RESISTOR,CHIP 10 1/16W 1608
R119	1-216-795-11	s	RESISTOR,CHIP 6.8 1/16W(1608)
R120	1-216-835-11	s	RESISTOR,CHIP 15K 1/16W
R121	1-216-835-11	s	RESISTOR,CHIP 15K 1/16W
R122	1-218-827-11	s	RESISTOR,CHIP 150 1/16W (1608)
R123	1-218-827-11	s	RESISTOR,CHIP 150 1/16W (1608)
R124	1-211-985-11	s	RESISTOR,CHIP 47 1/16W (1608)
R125	1-211-985-11	s	RESISTOR,CHIP 47 1/16W (1608)
R126	1-216-805-11	s	RESISTOR,CHIP 47 1/16W 1608
R127	1-216-805-11	s	RESISTOR,CHIP 47 1/16W 1608
R128	1-216-797-11	s	RESISTOR,CHIP 10 1/16W 1608
R129	1-216-797-11	s	RESISTOR,CHIP 10 1/16W 1608
R130	1-211-985-11	s	RESISTOR,CHIP 47 1/16W (1608)
R131	1-216-805-11	s	RESISTOR,CHIP 47 1/16W 1608
R132	1-216-805-11	s	RESISTOR,CHIP 47 1/16W 1608
R133	1-216-794-11	s	RESISTOR,CHIP 5.6 1/16W 1608
R134	1-216-864-11	s	RESISTOR,CHIP 0 1/16W (1608)
R135	1-218-843-11	s	RESISTOR,CHIP 680 1/16W (1608)
R136	1-218-855-11	s	RESISTOR,CHIP 2.2K 1/16W(1608)
R137	1-218-855-11	s	RESISTOR,CHIP 2.2K 1/16W(1608)
R138	1-216-805-11	s	RESISTOR,CHIP 47 1/16W 1608
R139	1-216-817-11	s	RESISTOR,CHIP 470 1/16W 1608
R140	1-218-823-11	s	RESISTOR,CHIP 100 1/16W (1608)
R141	1-218-860-11	s	RESISTOR,CHIP 3.6K 1/16W(1608)
R142	1-218-865-11	s	RESISTOR,CHIP 5.6K 1/16W(1608)
R143	1-218-855-11	s	RESISTOR,CHIP 2.2K 1/16W(1608)
R144	1-216-864-11	s	RESISTOR,CHIP 0 1/16W (1608)
R150	1-216-809-11	s	RESISTOR,CHIP 100 1/16W 1608
R151	1-216-809-11	s	RESISTOR,CHIP 100 1/16W 1608
R152	1-216-829-11	s	RESISTOR,CHIP 4.7K 1/16W(1608)
R153	1-216-833-11	s	RESISTOR,CHIP 10K 1/16W (1608)
R154	1-218-871-11	s	RESISTOR,CHIP 10K 1/16W (1608)
R155	1-218-867-11	s	RESISTOR,CHIP 6.8K 1/16W(1608)
R156	1-218-879-11	s	RESISTOR,CHIP 22K 1/16W (1608)
R157	1-218-853-11	s	RESISTOR,CHIP 1.8K 1/16W(1608)
R158	1-216-834-11	s	RESISTOR,CHIP 12K 1/16W 1608
R159	1-218-867-11	s	RESISTOR,CHIP 6.8K 1/16W(1608)
R160	1-218-835-11	s	RESISTOR,CHIP 330 1/16W (1608)
R161	1-218-837-11	s	RESISTOR,CHIP 390 1/16W (1608)

(RP-120 BOARD (for DSR-1800/P))

Ref. No. or Q'ty	Part No.	SP	Description
R162	1-216-864-11	s	RESISTOR,CHIP 0 1/16W (1608)
R165	1-211-985-11	s	RESISTOR,CHIP 47 1/16W (1608)
R166	1-216-821-11	s	RESISTOR,CHIP 1.0K 1/16W(1608)
R167	1-216-797-11	s	RESISTOR,CHIP 10 1/16W 1608
R168	1-216-797-11	s	RESISTOR,CHIP 10 1/16W 1608
R169	1-216-795-11	s	RESISTOR,CHIP 6.8 1/16W(1608)
R170	1-216-835-11	s	RESISTOR,CHIP 15K 1/16W
R171	1-216-835-11	s	RESISTOR,CHIP 15K 1/16W
R172	1-218-827-11	s	RESISTOR,CHIP 150 1/16W (1608)
R173	1-218-827-11	s	RESISTOR,CHIP 150 1/16W (1608)
R174	1-211-985-11	s	RESISTOR,CHIP 47 1/16W (1608)
R175	1-211-985-11	s	RESISTOR,CHIP 47 1/16W (1608)
R176	1-216-805-11	s	RESISTOR,CHIP 47 1/16W 1608
R177	1-216-805-11	s	RESISTOR,CHIP 47 1/16W 1608
R178	1-216-797-11	s	RESISTOR,CHIP 10 1/16W 1608
R179	1-216-797-11	s	RESISTOR,CHIP 10 1/16W 1608
R180	1-211-985-11	s	RESISTOR,CHIP 47 1/16W (1608)
R181	1-216-805-11	s	RESISTOR,CHIP 47 1/16W 1608
R182	1-216-805-11	s	RESISTOR,CHIP 47 1/16W 1608
R183	1-216-794-11	s	RESISTOR,CHIP 5.6 1/16W 1608
R184	1-216-864-11	s	RESISTOR,CHIP 0 1/16W (1608)
R185	1-218-843-11	s	RESISTOR,CHIP 680 1/16W (1608)
R186	1-218-855-11	s	RESISTOR,CHIP 2.2K 1/16W(1608)
R187	1-218-855-11	s	RESISTOR,CHIP 2.2K 1/16W(1608)
R188	1-216-805-11	s	RESISTOR,CHIP 47 1/16W 1608
R189	1-216-817-11	s	RESISTOR,CHIP 470 1/16W 1608
R190	1-218-823-11	s	RESISTOR,CHIP 100 1/16W (1608)
R191	1-218-860-11	s	RESISTOR,CHIP 3.6K 1/16W(1608)
R192	1-218-865-11	s	RESISTOR,CHIP 5.6K 1/16W(1608)
R193	1-218-855-11	s	RESISTOR,CHIP 2.2K 1/16W(1608)
R194	1-216-864-11	s	RESISTOR,CHIP 0 1/16W (1608)
R201	1-211-985-11	s	RESISTOR,CHIP 47 1/16W (1608)
R202	1-216-821-11	s	RESISTOR,CHIP 1.0K 1/16W(1608)
R203	1-216-864-11	s	RESISTOR,CHIP 0 1/16W (1608)
R204	1-216-805-11	s	RESISTOR,CHIP 47 1/16W 1608
R205	1-216-797-11	s	RESISTOR,CHIP 10 1/16W 1608
R206	1-216-797-11	s	RESISTOR,CHIP 10 1/16W 1608
R207	1-216-795-11	s	RESISTOR,CHIP 6.8 1/16W(1608)
R208	1-216-835-11	s	RESISTOR,CHIP 15K 1/16W
R209	1-216-835-11	s	RESISTOR,CHIP 15K 1/16W
R210	1-218-827-11	s	RESISTOR,CHIP 150 1/16W (1608)
R211	1-218-827-11	s	RESISTOR,CHIP 150 1/16W (1608)
R212	1-211-985-11	s	RESISTOR,CHIP 47 1/16W (1608)
R213	1-211-985-11	s	RESISTOR,CHIP 47 1/16W (1608)
R214	1-216-864-11	s	RESISTOR,CHIP 0 1/16W (1608)
R215	1-216-864-11	s	RESISTOR,CHIP 0 1/16W (1608)
R216	1-216-864-11	s	RESISTOR,CHIP 0 1/16W (1608)
R217	1-216-805-11	s	RESISTOR,CHIP 47 1/16W 1608
R218	1-216-805-11	s	RESISTOR,CHIP 47 1/16W 1608
R219	1-216-805-11	s	RESISTOR,CHIP 47 1/16W 1608
R220	1-211-985-11	s	RESISTOR,CHIP 47 1/16W (1608)
R221	1-211-969-11	s	RESISTOR,CHIP 10 1/16W (1608)
R222	1-211-969-11	s	RESISTOR,CHIP 10 1/16W (1608)
R223	1-216-805-11	s	RESISTOR,CHIP 47 1/16W 1608
R224	1-211-969-11	s	RESISTOR,CHIP 10 1/16W (1608)
R225	1-211-969-11	s	RESISTOR,CHIP 10 1/16W (1608)
R226	1-216-805-11	s	RESISTOR,CHIP 47 1/16W 1608
R227	1-216-805-11	s	RESISTOR,CHIP 47 1/16W 1608
R228	1-216-794-11	s	RESISTOR,CHIP 5.6 1/16W 1608

(RP-120 BOARD (for DSR-1800/P))

Ref. No. or Q'ty	Part No.	SP	Description
R229	1-216-864-11	s	RESISTOR,CHIP 0 1/16W (1608)
R230	1-218-843-11	s	RESISTOR,CHIP 680 1/16W (1608)
R231	1-218-855-11	s	RESISTOR,CHIP 2.2K 1/16W(1608)
R232	1-218-855-11	s	RESISTOR,CHIP 2.2K 1/16W(1608)
R233	1-218-855-11	s	RESISTOR,CHIP 2.2K 1/16W(1608)
R234	1-218-855-11	s	RESISTOR,CHIP 2.2K 1/16W(1608)
R235	1-216-805-11	s	RESISTOR,CHIP 47 1/16W 1608
R236	1-216-817-11	s	RESISTOR,CHIP 470 1/16W 1608
R237	1-218-823-11	s	RESISTOR,CHIP 100 1/16W (1608)
R238	1-218-860-11	s	RESISTOR,CHIP 3.6K 1/16W(1608)
R239	1-218-865-11	s	RESISTOR,CHIP 5.6K 1/16W(1608)
R240	1-218-855-11	s	RESISTOR,CHIP 2.2K 1/16W(1608)
R241	1-216-805-11	s	RESISTOR,CHIP 47 1/16W 1608
R242	1-216-864-11	s	RESISTOR,CHIP 0 1/16W (1608)
R243	1-216-805-11	s	RESISTOR,CHIP 47 1/16W 1608
R244	1-216-864-11	s	RESISTOR,CHIP 0 1/16W (1608)
R301	1-218-863-11	s	RESISTOR,CHIP 4.7K 1/16W(1608)
R302	1-218-867-11	s	RESISTOR,CHIP 6.8K 1/16W(1608)
R303	1-216-853-11	s	RESISTOR,CHIP 470K 1/16W(1608)
R304	1-218-864-11	s	RESISTOR,CHIP 5.1K 1/16W(1608)
R305	1-218-863-11	s	RESISTOR,CHIP 4.7K 1/16W(1608)
R306	1-216-821-11	s	RESISTOR,CHIP 1.0K 1/16W(1608)
R307	1-218-823-11	s	RESISTOR,CHIP 100 1/16W (1608)
R308	1-216-817-11	s	RESISTOR,CHIP 470 1/16W 1608
R309	1-216-821-11	s	RESISTOR,CHIP 1.0K 1/16W(1608)
R310	1-216-809-11	s	RESISTOR,CHIP 100 1/16W 1608
R311	1-218-849-11	s	RESISTOR,CHIP 1.2K 1/16W(1608)
R312	1-218-875-11	s	RESISTOR,CHIP 15K 1/16W (1608)
R313	1-211-973-11	s	RESISTOR,CHIP 15 1/16W (1608)
R314	1-216-805-11	s	RESISTOR,CHIP 47 1/16W 1608
R315	1-216-853-11	s	RESISTOR,CHIP 470K 1/16W(1608)
R316	1-218-880-11	s	RESISTOR,CHIP 24K 1/16W (1608)
R317	1-218-880-11	s	RESISTOR,CHIP 24K 1/16W (1608)
R318	1-218-879-11	s	RESISTOR,CHIP 22K 1/16W (1608)
R319	1-218-880-11	s	RESISTOR,CHIP 24K 1/16W (1608)
R320	1-218-847-11	s	RESISTOR, CHIP 1K 1/16W (1608)
R321	1-216-864-11	s	RESISTOR,CHIP 0 1/16W (1608)
R322	1-216-864-11	s	RESISTOR,CHIP 0 1/16W (1608)
R323	1-218-875-11	s	RESISTOR,CHIP 15K 1/16W (1608)
R324	1-218-871-11	s	RESISTOR,CHIP 10K 1/16W (1608)
R325	1-218-837-11	s	RESISTOR,CHIP 390 1/16W (1608)
R326	1-218-837-11	s	RESISTOR,CHIP 390 1/16W (1608)
R327	1-218-835-11	s	RESISTOR,CHIP 330 1/16W (1608)
R328	1-218-835-11	s	RESISTOR,CHIP 330 1/16W (1608)
R329	1-218-835-11	s	RESISTOR,CHIP 330 1/16W (1608)
R330	1-218-835-11	s	RESISTOR,CHIP 330 1/16W (1608)
R331	1-218-839-11	s	RESISTOR,CHIP 470 1/16W (1608)
R332	1-218-832-11	s	RESISTOR,CHIP 240 1/16W (1608)
R333	1-218-832-11	s	RESISTOR,CHIP 240 1/16W (1608)
R334	1-216-864-11	s	RESISTOR,CHIP 0 1/16W (1608)
R335	1-218-878-11	s	RESISTOR,CHIP 20K 1/16W (1608)
R336	1-218-879-11	s	RESISTOR,CHIP 22K 1/16W (1608)
R337	1-216-835-11	s	RESISTOR,CHIP 15K 1/16W
R338	1-216-809-11	s	RESISTOR,CHIP 100 1/16W 1608
R339	1-216-809-11	s	RESISTOR,CHIP 100 1/16W 1608
R340	1-216-810-11	s	RESISTOR, CHIP 120 1/16W 1608
R341	1-216-810-11	s	RESISTOR, CHIP 120 1/16W 1608
R342	1-218-871-11	s	RESISTOR,CHIP 10K 1/16W (1608)
R343	1-218-871-11	s	RESISTOR,CHIP 10K 1/16W (1608)

(RP-120 BOARD (for DSR-1800/P))

Ref. No. or Q'ty	Part No.	SP	Description
R360	1-216-829-11	s	RESISTOR,CHIP 4.7K 1/16W(1608)
R361	1-216-829-11	s	RESISTOR,CHIP 4.7K 1/16W(1608)
R362	1-216-809-11	s	RESISTOR,CHIP 100 1/16W 1608
R363	1-216-805-11	s	RESISTOR,CHIP 47 1/16W 1608
R364	1-218-839-11	s	RESISTOR,CHIP 470 1/16W (1608)
R365	1-216-805-11	s	RESISTOR,CHIP 47 1/16W 1608
R366	1-216-817-11	s	RESISTOR,CHIP 470 1/16W 1608
R367	1-216-809-11	s	RESISTOR,CHIP 100 1/16W 1608
R368	1-216-829-11	s	RESISTOR,CHIP 4.7K 1/16W(1608)
R369	1-216-829-11	s	RESISTOR,CHIP 4.7K 1/16W(1608)
R370	1-216-809-11	s	RESISTOR,CHIP 100 1/16W 1608
R371	1-216-805-11	s	RESISTOR,CHIP 47 1/16W 1608
R372	1-218-839-11	s	RESISTOR,CHIP 470 1/16W (1608)
R373	1-211-989-11	s	RESISTOR,CHIP 68 1/16W (1608)
R375	1-216-809-11	s	RESISTOR,CHIP 100 1/16W 1608
R376	1-216-864-11	s	RESISTOR,CHIP 0 1/16W (1608)
R377	1-216-809-11	s	RESISTOR,CHIP 100 1/16W 1608
R378	1-216-864-11	s	RESISTOR,CHIP 0 1/16W (1608)
R379	1-216-864-11	s	RESISTOR,CHIP 0 1/16W (1608)
R401	1-218-863-11	s	RESISTOR,CHIP 4.7K 1/16W(1608)
R402	1-218-867-11	s	RESISTOR,CHIP 6.8K 1/16W(1608)
R403	1-216-853-11	s	RESISTOR,CHIP 470K 1/16W(1608)
R404	1-218-864-11	s	RESISTOR,CHIP 5.1K 1/16W(1608)
R405	1-218-863-11	s	RESISTOR,CHIP 4.7K 1/16W(1608)
R406	1-216-821-11	s	RESISTOR,CHIP 1.0K 1/16W(1608)
R407	1-218-823-11	s	RESISTOR,CHIP 100 1/16W (1608)
R408	1-216-817-11	s	RESISTOR,CHIP 470 1/16W 1608
R409	1-216-821-11	s	RESISTOR,CHIP 1.0K 1/16W(1608)
R410	1-216-809-11	s	RESISTOR,CHIP 100 1/16W 1608
R411	1-218-849-11	s	RESISTOR,CHIP 1.2K 1/16W(1608)
R412	1-218-875-11	s	RESISTOR,CHIP 15K 1/16W (1608)
R413	1-211-973-11	s	RESISTOR,CHIP 15 1/16W (1608)
R414	1-216-805-11	s	RESISTOR,CHIP 47 1/16W 1608
R415	1-216-853-11	s	RESISTOR,CHIP 470K 1/16W(1608)
R416	1-218-880-11	s	RESISTOR,CHIP 24K 1/16W (1608)
R417	1-218-880-11	s	RESISTOR,CHIP 24K 1/16W (1608)
R418	1-218-879-11	s	RESISTOR,CHIP 22K 1/16W (1608)
R419	1-218-880-11	s	RESISTOR,CHIP 24K 1/16W (1608)
R420	1-218-847-11	s	RESISTOR, CHIP 1K 1/16W (1608)
R421	1-216-864-11	s	RESISTOR,CHIP 0 1/16W (1608)
R422	1-216-864-11	s	RESISTOR,CHIP 0 1/16W (1608)
R423	1-218-875-11	s	RESISTOR,CHIP 15K 1/16W (1608)
R424	1-218-871-11	s	RESISTOR,CHIP 10K 1/16W (1608)
R425	1-218-837-11	s	RESISTOR,CHIP 390 1/16W (1608)
R426	1-218-837-11	s	RESISTOR,CHIP 390 1/16W (1608)
R427	1-218-835-11	s	RESISTOR,CHIP 330 1/16W (1608)
R428	1-218-835-11	s	RESISTOR,CHIP 330 1/16W (1608)
R429	1-218-835-11	s	RESISTOR,CHIP 330 1/16W (1608)
R430	1-218-835-11	s	RESISTOR,CHIP 330 1/16W (1608)
R431	1-218-839-11	s	RESISTOR,CHIP 470 1/16W (1608)
R432	1-218-832-11	s	RESISTOR,CHIP 240 1/16W (1608)
R433	1-218-832-11	s	RESISTOR,CHIP 240 1/16W (1608)
R434	1-216-864-11	s	RESISTOR,CHIP 0 1/16W (1608)
R435	1-218-878-11	s	RESISTOR,CHIP 20K 1/16W (1608)
R436	1-218-879-11	s	RESISTOR,CHIP 22K 1/16W (1608)
R437	1-216-835-11	s	RESISTOR,CHIP 15K 1/16W
R438	1-218-823-11	s	RESISTOR,CHIP 100 1/16W (1608)
R439	1-218-823-11	s	RESISTOR,CHIP 100 1/16W (1608)
R440	1-216-810-11	s	RESISTOR, CHIP 120 1/16W 1608

(RP-120 BOARD (for DSR-1800/P))

Ref. No. or Q'ty	Part No.	SP	Description
R441	1-216-810-11	s	RESISTOR, CHIP 120 1/16W 1608
R442	1-218-871-11	s	RESISTOR,CHIP 10K 1/16W (1608)
R443	1-218-871-11	s	RESISTOR,CHIP 10K 1/16W (1608)
R460	1-216-829-11	s	RESISTOR,CHIP 4.7K 1/16W(1608)
R461	1-216-829-11	s	RESISTOR,CHIP 4.7K 1/16W(1608)
R462	1-216-809-11	s	RESISTOR,CHIP 100 1/16W 1608
R463	1-216-805-11	s	RESISTOR,CHIP 47 1/16W 1608
R464	1-218-839-11	s	RESISTOR,CHIP 470 1/16W (1608)
R465	1-216-805-11	s	RESISTOR,CHIP 47 1/16W 1608
R466	1-216-817-11	s	RESISTOR,CHIP 470 1/16W 1608
R467	1-216-809-11	s	RESISTOR,CHIP 100 1/16W 1608
R468	1-216-829-11	s	RESISTOR,CHIP 4.7K 1/16W(1608)
R469	1-216-829-11	s	RESISTOR,CHIP 4.7K 1/16W(1608)
R470	1-216-809-11	s	RESISTOR,CHIP 100 1/16W 1608
R471	1-216-805-11	s	RESISTOR,CHIP 47 1/16W 1608
R472	1-218-839-11	s	RESISTOR,CHIP 470 1/16W (1608)
R473	1-211-989-11	s	RESISTOR,CHIP 68 1/16W (1608)
R475	1-216-809-11	s	RESISTOR,CHIP 100 1/16W 1608
R477	1-216-809-11	s	RESISTOR,CHIP 100 1/16W 1608
R478	1-216-864-11	s	RESISTOR,CHIP 0 1/16W (1608)
R479	1-216-864-11	s	RESISTOR,CHIP 0 1/16W (1608)
R501	1-218-863-11	s	RESISTOR,CHIP 4.7K 1/16W(1608)
R502	1-218-867-11	s	RESISTOR,CHIP 6.8K 1/16W(1608)
R503	1-216-853-11	s	RESISTOR,CHIP 470K 1/16W(1608)
R504	1-218-864-11	s	RESISTOR,CHIP 5.1K 1/16W(1608)
R505	1-218-863-11	s	RESISTOR,CHIP 4.7K 1/16W(1608)
R506	1-216-821-11	s	RESISTOR,CHIP 1.0K 1/16W(1608)
R507	1-218-823-11	s	RESISTOR,CHIP 100 1/16W (1608)
R508	1-216-817-11	s	RESISTOR,CHIP 470 1/16W 1608
R509	1-216-821-11	s	RESISTOR,CHIP 1.0K 1/16W(1608)
R510	1-216-814-11	s	RESISTOR,CHIP 270 1/16W 1608
R511	1-218-849-11	s	RESISTOR,CHIP 1.2K 1/16W(1608)
R512	1-218-875-11	s	RESISTOR,CHIP 15K 1/16W (1608)
R513	1-211-973-11	s	RESISTOR,CHIP 15 1/16W (1608)
R514	1-216-805-11	s	RESISTOR,CHIP 47 1/16W 1608
R515	1-216-853-11	s	RESISTOR,CHIP 470K 1/16W(1608)
R516	1-218-880-11	s	RESISTOR,CHIP 24K 1/16W (1608)
R517	1-218-880-11	s	RESISTOR,CHIP 24K 1/16W (1608)
R518	1-218-879-11	s	RESISTOR,CHIP 22K 1/16W (1608)
R519	1-218-880-11	s	RESISTOR,CHIP 24K 1/16W (1608)
R520	1-218-847-11	s	RESISTOR, CHIP 1K 1/16W (1608)
R521	1-211-973-11	s	RESISTOR,CHIP 15 1/16W (1608)
R523	1-218-875-11	s	RESISTOR,CHIP 15K 1/16W (1608)
R524	1-218-871-11	s	RESISTOR,CHIP 10K 1/16W (1608)
R525	1-218-837-11	s	RESISTOR,CHIP 390 1/16W (1608)
R526	1-218-837-11	s	RESISTOR,CHIP 390 1/16W (1608)
R527	1-218-835-11	s	RESISTOR,CHIP 330 1/16W (1608)
R528	1-218-835-11	s	RESISTOR,CHIP 330 1/16W (1608)
R529	1-218-835-11	s	RESISTOR,CHIP 330 1/16W (1608)
R530	1-218-835-11	s	RESISTOR,CHIP 330 1/16W (1608)
R531	1-218-839-11	s	RESISTOR,CHIP 470 1/16W (1608)
R532	1-218-832-11	s	RESISTOR,CHIP 240 1/16W (1608)
R533	1-218-832-11	s	RESISTOR,CHIP 240 1/16W (1608)
R534	1-216-864-11	s	RESISTOR,CHIP 0 1/16W (1608)
R535	1-218-878-11	s	RESISTOR,CHIP 20K 1/16W (1608)
R536	1-218-879-11	s	RESISTOR,CHIP 22K 1/16W (1608)
R537	1-216-835-11	s	RESISTOR,CHIP 15K 1/16W
R538	1-216-809-11	s	RESISTOR,CHIP 100 1/16W 1608
R539	1-216-809-11	s	RESISTOR,CHIP 100 1/16W 1608

(RP-120 BOARD (for DSR-1800/P))

Ref. No. or Q'ty	Part No.	SP	Description
R540	1-216-810-11	s	RESISTOR, CHIP 120 1/16W 1608
R541	1-216-810-11	s	RESISTOR, CHIP 120 1/16W 1608
R542	1-218-871-11	s	RESISTOR,CHIP 10K 1/16W (1608)
R543	1-218-871-11	s	RESISTOR,CHIP 10K 1/16W (1608)
R544	1-216-864-11	s	RESISTOR,CHIP 0 1/16W (1608)
R545	1-216-864-11	s	RESISTOR,CHIP 0 1/16W (1608)
R546	1-216-864-11	s	RESISTOR,CHIP 0 1/16W (1608)
R560	1-216-829-11	s	RESISTOR,CHIP 4.7K 1/16W(1608)
R561	1-216-829-11	s	RESISTOR,CHIP 4.7K 1/16W(1608)
R562	1-216-809-11	s	RESISTOR,CHIP 100 1/16W 1608
R563	1-216-805-11	s	RESISTOR,CHIP 47 1/16W 1608
R564	1-218-839-11	s	RESISTOR,CHIP 470 1/16W (1608)
R565	1-216-805-11	s	RESISTOR,CHIP 47 1/16W 1608
R566	1-216-817-11	s	RESISTOR,CHIP 470 1/16W 1608
R567	1-216-809-11	s	RESISTOR,CHIP 100 1/16W 1608
R568	1-216-829-11	s	RESISTOR,CHIP 4.7K 1/16W(1608)
R569	1-216-829-11	s	RESISTOR,CHIP 4.7K 1/16W(1608)
R570	1-216-809-11	s	RESISTOR,CHIP 100 1/16W 1608
R571	1-216-805-11	s	RESISTOR,CHIP 47 1/16W 1608
R572	1-218-839-11	s	RESISTOR,CHIP 470 1/16W (1608)
R573	1-211-989-11	s	RESISTOR,CHIP 68 1/16W (1608)
R576	1-216-809-11	s	RESISTOR,CHIP 100 1/16W 1608
R577	1-216-809-11	s	RESISTOR,CHIP 100 1/16W 1608
R578	1-216-864-11	s	RESISTOR,CHIP 0 1/16W (1608)
R600	1-216-809-11	s	RESISTOR,CHIP 100 1/16W 1608
R601	1-216-864-11	s	RESISTOR,CHIP 0 1/16W (1608)
R602	1-216-845-11	s	RESISTOR,CHIP 100K 1/16W(1608)
R603	1-216-837-11	s	RESISTOR,CHIP 22K 1/16W 1608
R604	1-216-809-11	s	RESISTOR,CHIP 100 1/16W 1608
R605	1-216-864-11	s	RESISTOR,CHIP 0 1/16W (1608)
R606	1-216-864-11	s	RESISTOR,CHIP 0 1/16W (1608)
R607	1-216-864-11	s	RESISTOR,CHIP 0 1/16W (1608)
R608	1-216-809-11	s	RESISTOR,CHIP 100 1/16W 1608
R609	1-216-809-11	s	RESISTOR,CHIP 100 1/16W 1608
R611	1-216-864-11	s	RESISTOR,CHIP 0 1/16W (1608)
R612	1-216-864-11	s	RESISTOR,CHIP 0 1/16W (1608)
R613	1-216-864-11	s	RESISTOR,CHIP 0 1/16W (1608)
R615	1-216-864-11	s	RESISTOR,CHIP 0 1/16W (1608)
R616	1-216-864-11	s	RESISTOR,CHIP 0 1/16W (1608)
R617	1-216-864-11	s	RESISTOR,CHIP 0 1/16W (1608)
R618	1-216-864-11	s	RESISTOR,CHIP 0 1/16W (1608)
R620	1-216-864-11	s	RESISTOR,CHIP 0 1/16W (1608)
R650	1-216-809-11	s	RESISTOR,CHIP 100 1/16W 1608
R651	1-216-809-11	s	RESISTOR,CHIP 100 1/16W 1608
R652	1-216-845-11	s	RESISTOR,CHIP 100K 1/16W(1608)
R653	1-216-837-11	s	RESISTOR,CHIP 22K 1/16W 1608
R654	1-216-837-11	s	RESISTOR,CHIP 22K 1/16W 1608
R655	1-216-837-11	s	RESISTOR,CHIP 22K 1/16W 1608
R656	1-218-823-11	s	RESISTOR,CHIP 100 1/16W (1608)
R657	1-216-864-11	s	RESISTOR,CHIP 0 1/16W (1608)
R658	1-216-864-11	s	RESISTOR,CHIP 0 1/16W (1608)
R659	1-216-837-11	s	RESISTOR,CHIP 22K 1/16W 1608
R660	1-216-837-11	s	RESISTOR,CHIP 22K 1/16W 1608
R700	1-216-864-11	s	RESISTOR,CHIP 0 1/16W (1608)
R701	1-216-864-11	s	RESISTOR,CHIP 0 1/16W (1608)
R702	1-216-845-11	s	RESISTOR,CHIP 100K 1/16W(1608)
R703	1-216-837-11	s	RESISTOR,CHIP 22K 1/16W 1608
R704	1-216-809-11	s	RESISTOR,CHIP 100 1/16W 1608
R705	1-216-809-11	s	RESISTOR,CHIP 100 1/16W 1608

http://getMANUAL.com

(RP-120 BOARD (for DSR-1800/P))

Ref. No. or Q'ty	Part No.	SP	Description
R706	1-216-809-11	s	RESISTOR,CHIP 100 1/16W 1608
R707	1-216-809-11	s	RESISTOR,CHIP 100 1/16W 1608
R708	1-216-809-11	s	RESISTOR,CHIP 100 1/16W 1608
R709	1-216-864-11	s	RESISTOR,CHIP 0 1/16W (1608)
R710	1-216-864-11	s	RESISTOR,CHIP 0 1/16W (1608)
R712	1-216-837-11	s	RESISTOR,CHIP 22K 1/16W 1608
R800	1-218-851-11	s	RESISTOR,CHIP 1.5K 1/16W(1608)
R801	1-218-847-11	s	RESISTOR, CHIP 1K 1/16W (1608)
R802	1-218-851-11	s	RESISTOR,CHIP 1.5K 1/16W(1608)
R803	1-218-847-11	s	RESISTOR, CHIP 1K 1/16W (1608)
R804	1-218-851-11	s	RESISTOR,CHIP 1.5K 1/16W(1608)
R805	1-218-847-11	s	RESISTOR, CHIP 1K 1/16W (1608)
R806	1-216-845-11	s	RESISTOR,CHIP 100K 1/16W(1608)
R900	1-218-855-11	s	RESISTOR,CHIP 2.2K 1/16W(1608)
R901	1-218-855-11	s	RESISTOR,CHIP 2.2K 1/16W(1608)
R902	1-218-847-11	s	RESISTOR, CHIP 1K 1/16W (1608)
R903	1-218-847-11	s	RESISTOR, CHIP 1K 1/16W (1608)
R904	1-216-832-11	s	RESISTOR,CHIP 8.2K 1/16W 1608
R905	1-216-843-11	s	RESISTOR,CHIP 68K 1/16W (1608)
R906	1-216-839-11	s	RESISTOR,CHIP 33K 1/16W 1608
R907	1-216-833-11	s	RESISTOR,CHIP 10K 1/16W (1608)
R908	1-216-834-11	s	RESISTOR,CHIP 12K 1/16W 1608
R910	1-216-833-11	s	RESISTOR,CHIP 10K 1/16W (1608)
R911	1-218-871-11	s	RESISTOR,CHIP 10K 1/16W (1608)
R912	1-218-879-11	s	RESISTOR,CHIP 22K 1/16W (1608)
R913	1-216-839-11	s	RESISTOR,CHIP 33K 1/16W 1608
R914	1-216-834-11	s	RESISTOR,CHIP 12K 1/16W 1608
R915	1-216-817-11	s	RESISTOR,CHIP 470 1/16W 1608
R916	1-216-833-11	s	RESISTOR,CHIP 10K 1/16W (1608)
R917	1-216-833-11	s	RESISTOR,CHIP 10K 1/16W (1608)
R918	1-216-833-11	s	RESISTOR,CHIP 10K 1/16W (1608)
R919	1-216-821-11	s	RESISTOR,CHIP 1.0K 1/16W(1608)
R920	1-216-864-11	s	RESISTOR,CHIP 0 1/16W (1608)
R930	1-218-855-11	s	RESISTOR,CHIP 2.2K 1/16W(1608)
R931	1-218-855-11	s	RESISTOR,CHIP 2.2K 1/16W(1608)
R932	1-218-847-11	s	RESISTOR, CHIP 1K 1/16W (1608)
R933	1-218-847-11	s	RESISTOR, CHIP 1K 1/16W (1608)
R934	1-216-832-11	s	RESISTOR,CHIP 8.2K 1/16W 1608
R935	1-216-843-11	s	RESISTOR,CHIP 68K 1/16W (1608)
R936	1-216-839-11	s	RESISTOR,CHIP 33K 1/16W 1608
R937	1-216-833-11	s	RESISTOR,CHIP 10K 1/16W (1608)
R938	1-216-834-11	s	RESISTOR,CHIP 12K 1/16W 1608
R940	1-216-833-11	s	RESISTOR,CHIP 10K 1/16W (1608)
R941	1-218-871-11	s	RESISTOR,CHIP 10K 1/16W (1608)
R942	1-218-879-11	s	RESISTOR,CHIP 22K 1/16W (1608)
R943	1-216-839-11	s	RESISTOR,CHIP 33K 1/16W 1608
R944	1-216-834-11	s	RESISTOR,CHIP 12K 1/16W 1608
R945	1-216-817-11	s	RESISTOR,CHIP 470 1/16W 1608
R946	1-216-833-11	s	RESISTOR,CHIP 10K 1/16W (1608)
R947	1-216-833-11	s	RESISTOR,CHIP 10K 1/16W (1608)
R948	1-216-833-11	s	RESISTOR,CHIP 10K 1/16W (1608)
R949	1-216-821-11	s	RESISTOR,CHIP 1.0K 1/16W(1608)
R951	1-218-823-11	s	RESISTOR,CHIP 100 1/16W (1608)
R952	1-218-823-11	s	RESISTOR,CHIP 100 1/16W (1608)
R953	1-218-823-11	s	RESISTOR,CHIP 100 1/16W (1608)
R954	1-218-823-11	s	RESISTOR,CHIP 100 1/16W (1608)
R955	1-218-823-11	s	RESISTOR,CHIP 100 1/16W (1608)
R956	1-216-809-11	s	RESISTOR,CHIP 100 1/16W 1608
R957	1-211-981-11	s	RESISTOR,CHIP 33 1/16W (1608)

(RP-120 BOARD (for DSR-1800/P))

Ref. No. or Q'ty	Part No.	SP	Description
R958	1-216-821-11	s	RESISTOR,CHIP 1.0K 1/16W(1608)
R959	1-218-823-11	s	RESISTOR,CHIP 100 1/16W (1608)
R960	1-218-823-11	s	RESISTOR,CHIP 100 1/16W (1608)
R961	1-216-809-11	s	RESISTOR,CHIP 100 1/16W 1608
R962	1-216-809-11	s	RESISTOR,CHIP 100 1/16W 1608
R980	1-216-864-11	s	RESISTOR,CHIP 0 1/16W (1608)
R981	1-216-864-11	s	RESISTOR,CHIP 0 1/16W (1608)
R982	1-216-864-11	s	RESISTOR,CHIP 0 1/16W (1608)
R983	1-216-864-11	s	RESISTOR,CHIP 0 1/16W (1608)
R984	1-216-864-11	s	RESISTOR,CHIP 0 1/16W (1608)
R985	1-216-833-11	s	RESISTOR,CHIP 10K 1/16W (1608)
R986	1-216-864-11	s	RESISTOR,CHIP 0 1/16W (1608)
R986	*1		DELETE
R987	1-216-864-11	s	RESISTOR,CHIP 0 1/16W (1608)
R987	*1		DELETE
R988	1-216-864-11	s	RESISTOR,CHIP 0 1/16W (1608)
R988	*1		DELETE
R989	1-216-833-11	s	RESISTOR,CHIP 10K 1/16W (1608)
RB1	1-239-621-11	s	NETWORK RESISTOR 22 (1608)
RB2	1-236-907-11	s	RESISTOR BLOCK 100K (1608)
RB3	1-239-621-11	s	NETWORK RESISTOR 22 (1608)
RB4	1-236-907-11	s	RESISTOR BLOCK 100K (1608)
RB600	1-236-904-11	s	RESISTOR NETWORK 1K (1608)
RB601	1-236-904-11	s	RESISTOR NETWORK 1K (1608)
RB602	1-239-711-11	s	NETWORK, RESISTOR 0 (1608)
RB650	1-236-904-11	s	RESISTOR NETWORK 1K (1608)
RB651	1-236-904-11	s	RESISTOR NETWORK 1K (1608)
RB652	1-239-711-11	s	NETWORK, RESISTOR 0 (1608)
RB700	1-236-904-11	s	RESISTOR NETWORK 1K (1608)
RB701	1-236-904-11	s	RESISTOR NETWORK 1K (1608)
RB702	1-239-711-11	s	NETWORK, RESISTOR 0 (1608)
RB703	1-239-711-11	s	NETWORK, RESISTOR 0 (1608)
RB704	1-239-711-11	s	NETWORK, RESISTOR 0 (1608)
RB800	1-239-412-11	s	NETWORK, RESISTOR 100 (1608)
RB801	1-239-412-11	s	NETWORK, RESISTOR 100 (1608)
RB802	1-239-412-11	s	NETWORK, RESISTOR 100 (1608)
RB900	1-239-412-11	s	NETWORK, RESISTOR 100 (1608)
RB980	1-239-416-11	s	NETWORK,RESISTOR 220 (1608)
RB981	1-239-416-11	s	NETWORK,RESISTOR 220 (1608)
RB982	1-239-416-11	s	NETWORK,RESISTOR 220 (1608)
RB983	1-239-416-11	s	NETWORK,RESISTOR 220 (1608)
RB984	1-239-416-11	s	NETWORK,RESISTOR 220 (1608)
RB985	1-239-416-11	s	NETWORK,RESISTOR 220 (1608)

SE-521 BOARD

Ref. No. or Q'ty	Part No.	SP	Description
1pc	A-8323-518-A	s	MOUNTED CIRCUIT BOARD, SE-521
CN3	1-784-405-21	s	CONNECTOR, FFC/FPC (ZIF) 5P
CN4	1-785-840-21	o	CONNECTOR, FFC (ZIF) 15P
PH1	8-719-988-15	s	PHOTO REFRECTOR PR-11-C
PH2	8-719-988-15	s	PHOTO REFRECTOR PR-11-C
PH3	8-719-988-15	s	PHOTO REFRECTOR PR-11-C
Q1	8-729-926-31	s	PHOTO TRANSISTOR PT483F1S

SE-522 BOARD

Ref. No. or Q'ty	Part No.	SP	Description
1pc	A-8323-519-A	s	MOUNTED CIRCUIT BOARD, SE-522
CN2	1-784-405-21	s	CONNECTOR, FFC/FPC (ZIF) 5P
CN3	1-785-840-21	o	CONNECTOR, FFC (ZIF) 15P
PH1	8-719-939-11	s	PHOTO SENSOR GP2S09B
PH2	8-719-939-11	s	PHOTO SENSOR GP2S09B
PH3	8-719-939-11	s	PHOTO SENSOR GP2S09B
PH4	8-719-988-15	s	PHOTO REFRECTOR PR-11-C
Q1	8-729-926-31	s	PHOTO TRANSISTOR PT483F1S
TH1	1-801-596-11	s	THERMISTOR

SSP-23 BOARD (for DSR-1600/P)

Ref. No. or Q'ty	Part No.	SP	Description
1pc	⚠ 1-528-749-11	s	BATTERY,MOLD TYPE (LITHIUM)
4pcs	4-886-821-11	s	SCREW,M3X6 CASE(SILVER)
C3	1-126-394-11	s	CAPACITOR,ELECT 10MF/16V(CHIP)
C8	1-126-395-11	s	CAPACITOR,ELECT 22MF/16V(CHIP)
C11	1-162-970-11	s	CAPACITOR CERAMIC 0.01MF/25V B
C200	1-126-396-11	s	CAPACITOR,ELECT 47MF/16V(CHIP)
C201	1-164-227-11	s	CAPACITOR,CERAMIC 0.022MF/25V
C202	1-165-176-11	s	CAPACITOR,CERAMIC 47000PF/16V
C203	1-164-156-11	s	CAPACITOR,CERAMIC 0.1MF/25V F
C204	1-164-156-11	s	CAPACITOR,CERAMIC 0.1MF/25V F
C205	1-162-964-11	s	CAPACITOR,CERAMIC 1000PF/50V B
C206	1-164-227-11	s	CAPACITOR,CERAMIC 0.022MF/25V
C207	1-164-227-11	s	CAPACITOR,CERAMIC 0.022MF/25V
C208	1-162-917-11	s	CAPACITOR,CERAMIC 15PF/50V CH
C209	1-162-917-11	s	CAPACITOR,CERAMIC 15PF/50V CH
C210	1-164-156-11	s	CAPACITOR,CERAMIC 0.1MF/25V F
C211	1-164-156-11	s	CAPACITOR,CERAMIC 0.1MF/25V F
C212	1-164-156-11	s	CAPACITOR,CERAMIC 0.1MF/25V F
C213	1-164-156-11	s	CAPACITOR,CERAMIC 0.1MF/25V F
C214	1-164-156-11	s	CAPACITOR,CERAMIC 0.1MF/25V F
C215	1-164-156-11	s	CAPACITOR,CERAMIC 0.1MF/25V F
C217	1-164-156-11	s	CAPACITOR,CERAMIC 0.1MF/25V F
C218	1-164-156-11	s	CAPACITOR,CERAMIC 0.1MF/25V F
C219	1-164-156-11	s	CAPACITOR,CERAMIC 0.1MF/25V F
C220	1-164-156-11	s	CAPACITOR,CERAMIC 0.1MF/25V F
C221	1-164-156-11	s	CAPACITOR,CERAMIC 0.1MF/25V F
C222	1-164-156-11	s	CAPACITOR,CERAMIC 0.1MF/25V F
C223	1-164-156-11	s	CAPACITOR,CERAMIC 0.1MF/25V F
C224	1-164-156-11	s	CAPACITOR,CERAMIC 0.1MF/25V F
C225	1-164-156-11	s	CAPACITOR,CERAMIC 0.1MF/25V F
C226	1-162-966-11	s	CAPACITOR,CERAMIC 2200PF/50V B
C300	1-162-970-11	s	CAPACITOR CERAMIC 0.01MF/25V B
C301	1-126-394-11	s	CAPACITOR,ELECT 10MF/16V(CHIP)
C302	1-162-968-11	s	CAPACITOR,CERAMIC 4700PF/50V B
C303	1-162-927-11	s	CAPACITOR,CERAMIC 100PF/50V CH
C304	1-162-927-11	s	CAPACITOR,CERAMIC 100PF/50V CH
C305	1-164-156-11	s	CAPACITOR,CERAMIC 0.1MF/25V F
C306	1-162-970-11	s	CAPACITOR CERAMIC 0.01MF/25V B
C307	1-162-964-11	s	CAPACITOR,CERAMIC 1000PF/50V B
C308	1-164-315-11	s	CAPACITOR,CERAMIC 470PF/50V CH
C309	1-162-922-11	s	CAPACITOR,CERAMIC 39PF/50V CH
C310	1-165-176-11	s	CAPACITOR,CERAMIC 47000PF/16V
C311	1-162-968-11	s	CAPACITOR,CERAMIC 4700PF/50V B
C312	1-162-922-11	s	CAPACITOR,CERAMIC 39PF/50V CH
C313	1-162-922-11	s	CAPACITOR,CERAMIC 39PF/50V CH
C314	1-162-968-11	s	CAPACITOR,CERAMIC 4700PF/50V B
C315	1-162-968-11	s	CAPACITOR,CERAMIC 4700PF/50V B
C316	1-162-964-11	s	CAPACITOR,CERAMIC 1000PF/50V B
C317	1-165-176-11	s	CAPACITOR,CERAMIC 47000PF/16V
C318	1-164-315-11	s	CAPACITOR,CERAMIC 470PF/50V CH
C319	1-162-922-11	s	CAPACITOR,CERAMIC 39PF/50V CH
C320	1-165-176-11	s	CAPACITOR,CERAMIC 47000PF/16V
C321	1-162-922-11	s	CAPACITOR,CERAMIC 39PF/50V CH
C322	1-162-922-11	s	CAPACITOR,CERAMIC 39PF/50V CH
C323	1-162-968-11	s	CAPACITOR,CERAMIC 4700PF/50V B
C324	1-162-968-11	s	CAPACITOR,CERAMIC 4700PF/50V B
C325	1-164-156-11	s	CAPACITOR,CERAMIC 0.1MF/25V F
C326	1-162-970-11	s	CAPACITOR CERAMIC 0.01MF/25V B

(SSP-23 BOARD (for DSR-1600/P))

Ref. No. or Q'ty	Part No.	SP	Description
C327	1-164-156-11	s	CAPACITOR,CERAMIC 0.1MF/25V F
C328	1-164-156-11	s	CAPACITOR,CERAMIC 0.1MF/25V F
C329	1-164-156-11	s	CAPACITOR,CERAMIC 0.1MF/25V F
C330	1-164-156-11	s	CAPACITOR,CERAMIC 0.1MF/25V F
C331	1-164-156-11	s	CAPACITOR,CERAMIC 0.1MF/25V F
C332	1-164-156-11	s	CAPACITOR,CERAMIC 0.1MF/25V F
C333	1-164-156-11	s	CAPACITOR,CERAMIC 0.1MF/25V F
C334	1-164-156-11	s	CAPACITOR,CERAMIC 0.1MF/25V F
C335	1-164-156-11	s	CAPACITOR,CERAMIC 0.1MF/25V F
C336	1-164-156-11	s	CAPACITOR,CERAMIC 0.1MF/25V F
C337	1-164-156-11	s	CAPACITOR,CERAMIC 0.1MF/25V F
C338	1-164-156-11	s	CAPACITOR,CERAMIC 0.1MF/25V F
C339	1-164-156-11	s	CAPACITOR,CERAMIC 0.1MF/25V F
C340	1-164-156-11	s	CAPACITOR,CERAMIC 0.1MF/25V F
C341	1-164-156-11	s	CAPACITOR,CERAMIC 0.1MF/25V F
C342	1-164-156-11	s	CAPACITOR,CERAMIC 0.1MF/25V F
C343	1-164-156-11	s	CAPACITOR,CERAMIC 0.1MF/25V F
C344	1-164-156-11	s	CAPACITOR,CERAMIC 0.1MF/25V F
C345	1-164-156-11	s	CAPACITOR,CERAMIC 0.1MF/25V F
C346	1-164-156-11	s	CAPACITOR,CERAMIC 0.1MF/25V F
C347	1-164-156-11	s	CAPACITOR,CERAMIC 0.1MF/25V F
C400	1-164-156-11	s	CAPACITOR,CERAMIC 0.1MF/25V F
C401	1-128-393-11	s	CAPACITOR,ELECT 100MF/10V
C402	1-128-393-11	s	CAPACITOR,ELECT 100MF/10V
C403	1-164-156-11	s	CAPACITOR,CERAMIC 0.1MF/25V F
C404	1-128-394-11	s	CAPACITOR,ELECT 220MF/10V
C405	1-164-156-11	s	CAPACITOR,CERAMIC 0.1MF/25V F
C406	1-164-156-11	s	CAPACITOR,CERAMIC 0.1MF/25V F
C407	1-162-917-11	s	CAPACITOR,CERAMIC 15PF/50V CH
C408	1-162-917-11	s	CAPACITOR,CERAMIC 15PF/50V CH
C409	1-164-156-11	s	CAPACITOR,CERAMIC 0.1MF/25V F
C412	1-164-156-11	s	CAPACITOR,CERAMIC 0.1MF/25V F
C413	1-164-156-11	s	CAPACITOR,CERAMIC 0.1MF/25V F
C414	1-164-156-11	s	CAPACITOR,CERAMIC 0.1MF/25V F
C415	1-164-156-11	s	CAPACITOR,CERAMIC 0.1MF/25V F
C416	1-164-156-11	s	CAPACITOR,CERAMIC 0.1MF/25V F
C417	1-164-156-11	s	CAPACITOR,CERAMIC 0.1MF/25V F
C418	1-164-156-11	s	CAPACITOR,CERAMIC 0.1MF/25V F
C419	1-164-156-11	s	CAPACITOR,CERAMIC 0.1MF/25V F
C420	1-164-156-11	s	CAPACITOR,CERAMIC 0.1MF/25V F
C421	1-164-156-11	s	CAPACITOR,CERAMIC 0.1MF/25V F
C422	1-164-156-11	s	CAPACITOR,CERAMIC 0.1MF/25V F
C423	1-164-156-11	s	CAPACITOR,CERAMIC 0.1MF/25V F
C424	1-164-156-11	s	CAPACITOR,CERAMIC 0.1MF/25V F
C425	1-164-156-11	s	CAPACITOR,CERAMIC 0.1MF/25V F
C426	1-164-156-11	s	CAPACITOR,CERAMIC 0.1MF/25V F
C427	1-164-156-11	s	CAPACITOR,CERAMIC 0.1MF/25V F
C428	1-164-156-11	s	CAPACITOR,CERAMIC 0.1MF/25V F
C429	1-164-156-11	s	CAPACITOR,CERAMIC 0.1MF/25V F
C430	1-164-156-11	s	CAPACITOR,CERAMIC 0.1MF/25V F
C431	1-164-156-11	s	CAPACITOR,CERAMIC 0.1MF/25V F
C432	1-164-156-11	s	CAPACITOR,CERAMIC 0.1MF/25V F
C433	1-164-156-11	s	CAPACITOR,CERAMIC 0.1MF/25V F
C434	1-164-156-11	s	CAPACITOR,CERAMIC 0.1MF/25V F
C435	1-164-156-11	s	CAPACITOR,CERAMIC 0.1MF/25V F
C436	1-164-156-11	s	CAPACITOR,CERAMIC 0.1MF/25V F
C437	1-164-156-11	s	CAPACITOR,CERAMIC 0.1MF/25V F
C438	1-164-156-11	s	CAPACITOR,CERAMIC 0.1MF/25V F
C439	1-164-156-11	s	CAPACITOR,CERAMIC 0.1MF/25V F

(SSP-23 BOARD (for DSR-1600/P))

Ref. No. or Q'ty	Part No.	SP	Description
C442	1-162-995-11	s	CAPACITOR,CERAMIC 0.022MF/50V
C443	1-162-995-11	s	CAPACITOR,CERAMIC 0.022MF/50V
C500	1-164-156-11	s	CAPACITOR,CERAMIC 0.1MF/25V F
C501	1-164-156-11	s	CAPACITOR,CERAMIC 0.1MF/25V F
C502	1-126-396-11	s	CAPACITOR,ELECT 47MF/16V(CHIP)
C503	1-164-156-11	s	CAPACITOR,CERAMIC 0.1MF/25V F
C504	1-164-156-11	s	CAPACITOR,CERAMIC 0.1MF/25V F
C505	1-164-156-11	s	CAPACITOR,CERAMIC 0.1MF/25V F
C506	1-162-917-11	s	CAPACITOR,CERAMIC 15PF/50V CH
C507	1-162-917-11	s	CAPACITOR,CERAMIC 15PF/50V CH
C508	1-164-156-11	s	CAPACITOR,CERAMIC 0.1MF/25V F
C509	1-164-156-11	s	CAPACITOR,CERAMIC 0.1MF/25V F
C510	1-135-212-21	s	CAPACITOR TANTALUM 2.2MF/35V
C511	1-164-156-11	s	CAPACITOR,CERAMIC 0.1MF/25V F
C512	1-164-156-11	s	CAPACITOR,CERAMIC 0.1MF/25V F
C513	1-164-156-11	s	CAPACITOR,CERAMIC 0.1MF/25V F
C514	1-164-156-11	s	CAPACITOR,CERAMIC 0.1MF/25V F
C515	1-164-156-11	s	CAPACITOR,CERAMIC 0.1MF/25V F
C516	1-164-156-11	s	CAPACITOR,CERAMIC 0.1MF/25V F
C517	1-164-156-11	s	CAPACITOR,CERAMIC 0.1MF/25V F
C518	1-164-156-11	s	CAPACITOR,CERAMIC 0.1MF/25V F
C519	1-164-156-11	s	CAPACITOR,CERAMIC 0.1MF/25V F
C520	1-164-156-11	s	CAPACITOR,CERAMIC 0.1MF/25V F
C521	1-164-156-11	s	CAPACITOR,CERAMIC 0.1MF/25V F
C522	1-164-156-11	s	CAPACITOR,CERAMIC 0.1MF/25V F
C523	1-164-156-11	s	CAPACITOR,CERAMIC 0.1MF/25V F
C600	1-164-156-11	s	CAPACITOR,CERAMIC 0.1MF/25V F
C601	1-164-156-11	s	CAPACITOR,CERAMIC 0.1MF/25V F
C602	1-164-156-11	s	CAPACITOR,CERAMIC 0.1MF/25V F
C603	1-164-156-11	s	CAPACITOR,CERAMIC 0.1MF/25V F
C608	1-162-995-11	s	CAPACITOR,CERAMIC 0.022MF/50V
C609	1-162-970-11	s	CAPACITOR CERAMIC 0.01MF/25V B
C610	1-162-927-11	s	CAPACITOR,CERAMIC 100PF/50V CH
C611	1-164-156-11	s	CAPACITOR,CERAMIC 0.1MF/25V F
C612	1-164-156-11	s	CAPACITOR,CERAMIC 0.1MF/25V F
C613	1-128-395-11	s	CAPACITOR, ELECT 330MF/10V CHI
C1071	1-164-156-11	s	CAPACITOR,CERAMIC 0.1MF/25V F
C1072	1-128-393-11	s	CAPACITOR,ELECT 100MF/10V
C1073	1-128-393-11	s	CAPACITOR,ELECT 100MF/10V
C1074	1-164-156-11	s	CAPACITOR,CERAMIC 0.1MF/25V F
C1075	1-128-394-11	s	CAPACITOR,ELECT 220MF/10V
C1076	1-164-156-11	s	CAPACITOR,CERAMIC 0.1MF/25V F
C1077	1-164-156-11	s	CAPACITOR,CERAMIC 0.1MF/25V F
C1078	1-164-156-11	s	CAPACITOR,CERAMIC 0.1MF/25V F
C1079	1-164-156-11	s	CAPACITOR,CERAMIC 0.1MF/25V F
C1080	1-164-156-11	s	CAPACITOR,CERAMIC 0.1MF/25V F
C1081	1-164-156-11	s	CAPACITOR,CERAMIC 0.1MF/25V F
C1082	1-164-156-11	s	CAPACITOR,CERAMIC 0.1MF/25V F
C1083	1-164-156-11	s	CAPACITOR,CERAMIC 0.1MF/25V F
C1084	1-164-156-11	s	CAPACITOR,CERAMIC 0.1MF/25V F
C1101	1-164-156-11	s	CAPACITOR,CERAMIC 0.1MF/25V F
C1102	1-164-156-11	s	CAPACITOR,CERAMIC 0.1MF/25V F
C1103	1-128-393-11	s	CAPACITOR,ELECT 100MF/10V
C1104	1-164-156-11	s	CAPACITOR,CERAMIC 0.1MF/25V F
C1105	1-164-156-11	s	CAPACITOR,CERAMIC 0.1MF/25V F
C1106	1-164-156-11	s	CAPACITOR,CERAMIC 0.1MF/25V F
C1107	1-128-393-11	s	CAPACITOR,ELECT 100MF/10V
C1108	1-164-156-11	s	CAPACITOR,CERAMIC 0.1MF/25V F
C1109	1-164-156-11	s	CAPACITOR,CERAMIC 0.1MF/25V F

(SSP-23 BOARD (for DSR-1600/P))

Ref. No. or Q'ty	Part No.	SP	Description
C1110	1-128-393-11	s	CAPACITOR,ELECT 100MF/10V
C1111	1-115-156-11	s	CAPACITOR,CERAMIC 1MF/10V(1608
C1112	1-164-156-11	s	CAPACITOR,CERAMIC 0.1MF/25V F
C1113	1-164-156-11	s	CAPACITOR,CERAMIC 0.1MF/25V F
C1114	1-164-156-11	s	CAPACITOR,CERAMIC 0.1MF/25V F
C1115	1-164-217-11	s	CAPACITOR,CERAMIC 150PF/50V CH
C1116	1-162-927-11	s	CAPACITOR,CERAMIC 100PF/50V CH
C1117	1-164-217-11	s	CAPACITOR,CERAMIC 150PF/50V CH
C1118	1-164-156-11	s	CAPACITOR,CERAMIC 0.1MF/25V F
C1119	1-164-156-11	s	CAPACITOR,CERAMIC 0.1MF/25V F
C1120	1-164-156-11	s	CAPACITOR,CERAMIC 0.1MF/25V F
C1121	1-164-156-11	s	CAPACITOR,CERAMIC 0.1MF/25V F
C1122	1-128-393-11	s	CAPACITOR,ELECT 100MF/10V
C1123	1-164-156-11	s	CAPACITOR,CERAMIC 0.1MF/25V F
C1124	1-164-156-11	s	CAPACITOR,CERAMIC 0.1MF/25V F
C1155	1-164-156-11	s	CAPACITOR,CERAMIC 0.1MF/25V F
C1156	1-164-156-11	s	CAPACITOR,CERAMIC 0.1MF/25V F
C1157	1-164-156-11	s	CAPACITOR,CERAMIC 0.1MF/25V F
C1158	1-164-156-11	s	CAPACITOR,CERAMIC 0.1MF/25V F
C1159	1-164-156-11	s	CAPACITOR,CERAMIC 0.1MF/25V F
C1160	1-128-393-11	s	CAPACITOR,ELECT 100MF/10V
C1161	1-128-393-11	s	CAPACITOR,ELECT 100MF/10V
C1251	1-164-156-11	s	CAPACITOR,CERAMIC 0.1MF/25V F
C1252	1-164-156-11	s	CAPACITOR,CERAMIC 0.1MF/25V F
C1253	1-164-156-11	s	CAPACITOR,CERAMIC 0.1MF/25V F
C1254	1-164-156-11	s	CAPACITOR,CERAMIC 0.1MF/25V F
C1255	1-164-156-11	s	CAPACITOR,CERAMIC 0.1MF/25V F
C1256	1-128-393-11	s	CAPACITOR,ELECT 100MF/10V
C1257	1-164-156-11	s	CAPACITOR,CERAMIC 0.1MF/25V F
C1258	1-164-156-11	s	CAPACITOR,CERAMIC 0.1MF/25V F
C1351	1-162-917-11	s	CAPACITOR,CERAMIC 15PF/50V CH
C1352	1-164-156-11	s	CAPACITOR,CERAMIC 0.1MF/25V F
C1353	1-162-917-11	s	CAPACITOR,CERAMIC 15PF/50V CH
C1373	1-164-156-11	s	CAPACITOR,CERAMIC 0.1MF/25V F
C1374	1-164-156-11	s	CAPACITOR,CERAMIC 0.1MF/25V F
C1375	1-128-393-11	s	CAPACITOR,ELECT 100MF/10V
C1376	1-162-964-11	s	CAPACITOR,CERAMIC 1000PF/50V B
C1377	1-162-927-11	s	CAPACITOR,CERAMIC 100PF/50V CH
C1378	1-164-156-11	s	CAPACITOR,CERAMIC 0.1MF/25V F
C1379	1-162-964-11	s	CAPACITOR,CERAMIC 1000PF/50V B
C1380	1-162-964-11	s	CAPACITOR,CERAMIC 1000PF/50V B
C1381	1-165-176-11	s	CAPACITOR,CERAMIC 47000PF/16V
C1382	1-164-505-11	s	CAPACITOR,CHIP CERAMIC 2.2MF
C1383	1-164-156-11	s	CAPACITOR,CERAMIC 0.1MF/25V F
C1384	1-164-156-11	s	CAPACITOR,CERAMIC 0.1MF/25V F
C1385	1-164-156-11	s	CAPACITOR,CERAMIC 0.1MF/25V F
C1386	1-164-156-11	s	CAPACITOR,CERAMIC 0.1MF/25V F
C1387	1-128-393-11	s	CAPACITOR,ELECT 100MF/10V
C1389	1-164-156-11	s	CAPACITOR,CERAMIC 0.1MF/25V F
C1451	1-164-230-11	s	CAPACITOR,CERAMIC 220PF/50V
C1452	1-164-230-11	s	CAPACITOR,CERAMIC 220PF/50V
C1453	1-164-156-11	s	CAPACITOR,CERAMIC 0.1MF/25V F
C1454	1-164-156-11	s	CAPACITOR,CERAMIC 0.1MF/25V F
C1455	1-164-230-11	s	CAPACITOR,CERAMIC 220PF/50V
C1456	1-164-230-11	s	CAPACITOR,CERAMIC 220PF/50V
C1457	1-164-156-11	s	CAPACITOR,CERAMIC 0.1MF/25V F
C1458	1-128-393-11	s	CAPACITOR,ELECT 100MF/10V
C1459	1-164-156-11	s	CAPACITOR,CERAMIC 0.1MF/25V F
C1460	1-164-156-11	s	CAPACITOR,CERAMIC 0.1MF/25V F

(SSP-23 BOARD (for DSR-1600/P))

Ref. No. or Q'ty	Part No.	SP	Description
C1461	1-164-156-11	s	CAPACITOR,CERAMIC 0.1MF/25V F
C1462	1-164-156-11	s	CAPACITOR,CERAMIC 0.1MF/25V F
C1463	1-164-156-11	s	CAPACITOR,CERAMIC 0.1MF/25V F
C1464	1-128-393-11	s	CAPACITOR,ELECT 100MF/10V
C1465	1-128-393-11	s	CAPACITOR,ELECT 100MF/10V
C1466	1-164-156-11	s	CAPACITOR,CERAMIC 0.1MF/25V F
C1467	1-164-156-11	s	CAPACITOR,CERAMIC 0.1MF/25V F
C1468	1-128-393-11	s	CAPACITOR,ELECT 100MF/10V
C1469	1-164-156-11	s	CAPACITOR,CERAMIC 0.1MF/25V F
C1470	1-164-156-11	s	CAPACITOR,CERAMIC 0.1MF/25V F
C1471	1-128-393-11	s	CAPACITOR,ELECT 100MF/10V
C1472	1-164-156-11	s	CAPACITOR,CERAMIC 0.1MF/25V F
C1473	1-164-156-11	s	CAPACITOR,CERAMIC 0.1MF/25V F
C1474	1-128-393-11	s	CAPACITOR,ELECT 100MF/10V
C1475	1-164-156-11	s	CAPACITOR,CERAMIC 0.1MF/25V F
C1476	1-128-393-11	s	CAPACITOR,ELECT 100MF/10V
C1477	1-164-156-11	s	CAPACITOR,CERAMIC 0.1MF/25V F
C1478	1-128-393-11	s	CAPACITOR,ELECT 100MF/10V
C1479	1-164-156-11	s	CAPACITOR,CERAMIC 0.1MF/25V F
C1480	1-164-156-11	s	CAPACITOR,CERAMIC 0.1MF/25V F
C1551	1-164-156-11	s	CAPACITOR,CERAMIC 0.1MF/25V F
C1552	1-128-393-11	s	CAPACITOR,ELECT 100MF/10V
C1553	1-128-393-11	s	CAPACITOR,ELECT 100MF/10V
C1554	1-164-156-11	s	CAPACITOR,CERAMIC 0.1MF/25V F
C1557	1-164-156-11	s	CAPACITOR,CERAMIC 0.1MF/25V F
C1558	1-164-156-11	s	CAPACITOR,CERAMIC 0.1MF/25V F
C1561	1-128-394-11	s	CAPACITOR,ELECT 220MF/10V
C1562	1-164-156-11	s	CAPACITOR,CERAMIC 0.1MF/25V F
C1571	1-164-156-11	s	CAPACITOR,CERAMIC 0.1MF/25V F
C1572	1-164-156-11	s	CAPACITOR,CERAMIC 0.1MF/25V F
C1573	1-164-156-11	s	CAPACITOR,CERAMIC 0.1MF/25V F
C1574	1-164-156-11	s	CAPACITOR,CERAMIC 0.1MF/25V F
C1575	1-164-156-11	s	CAPACITOR,CERAMIC 0.1MF/25V F
C1576	1-164-156-11	s	CAPACITOR,CERAMIC 0.1MF/25V F
C1577	1-164-156-11	s	CAPACITOR,CERAMIC 0.1MF/25V F
C1578	1-164-156-11	s	CAPACITOR,CERAMIC 0.1MF/25V F
C1581	1-216-801-11	s	RESISTOR,CHIP 22 1/16W (1608)
C1584	1-216-801-11	s	RESISTOR,CHIP 22 1/16W (1608)
C1589	1-216-801-11	s	RESISTOR,CHIP 22 1/16W (1608)
C1590	1-216-801-11	s	RESISTOR,CHIP 22 1/16W (1608)
C1591	1-216-801-11	s	RESISTOR,CHIP 22 1/16W (1608)
C1592	1-216-801-11	s	RESISTOR,CHIP 22 1/16W (1608)
C1593	1-216-801-11	s	RESISTOR,CHIP 22 1/16W (1608)
C1594	1-216-801-11	s	RESISTOR,CHIP 22 1/16W (1608)
C1595	1-216-801-11	s	RESISTOR,CHIP 22 1/16W (1608)
C1596	1-216-801-11	s	RESISTOR,CHIP 22 1/16W (1608)
C1597	1-216-801-11	s	RESISTOR,CHIP 22 1/16W (1608)
C1598	1-216-801-11	s	RESISTOR,CHIP 22 1/16W (1608)
C1599	1-216-801-11	s	RESISTOR,CHIP 22 1/16W (1608)
C1600	1-216-801-11	s	RESISTOR,CHIP 22 1/16W (1608)
C1601	1-216-801-11	s	RESISTOR,CHIP 22 1/16W (1608)
C1602	1-164-505-11	s	CAPACITOR,CHIP CERAMIC 2.2MF
C1603	1-164-505-11	s	CAPACITOR,CHIP CERAMIC 2.2MF
C1604	1-162-923-11	s	CAPACITOR,CERAMIC 47PF/50V CH
C1621	1-164-156-11	s	CAPACITOR,CERAMIC 0.1MF/25V F
C1622	1-164-156-11	s	CAPACITOR,CERAMIC 0.1MF/25V F
C1631	1-164-156-11	s	CAPACITOR,CERAMIC 0.1MF/25V F
C1632	1-164-156-11	s	CAPACITOR,CERAMIC 0.1MF/25V F
C1633	1-164-156-11	s	CAPACITOR,CERAMIC 0.1MF/25V F

(SSP-23 BOARD (for DSR-1600/P))

Ref. No. or Q'ty	Part No.	SP	Description
C1634	1-164-156-11	s	CAPACITOR,CERAMIC 0.1MF/25V F
C1635	1-164-156-11	s	CAPACITOR,CERAMIC 0.1MF/25V F
C1636	1-164-156-11	s	CAPACITOR,CERAMIC 0.1MF/25V F
C1637	1-164-156-11	s	CAPACITOR,CERAMIC 0.1MF/25V F
C1638	1-164-156-11	s	CAPACITOR,CERAMIC 0.1MF/25V F
C1639	1-164-156-11	s	CAPACITOR,CERAMIC 0.1MF/25V F
C1640	1-128-393-11	s	CAPACITOR,ELECT 100MF/10V
C1641	1-128-393-11	s	CAPACITOR,ELECT 100MF/10V
C1652	1-164-156-11	s	CAPACITOR,CERAMIC 0.1MF/25V F
C1653	1-164-156-11	s	CAPACITOR,CERAMIC 0.1MF/25V F
C1654	1-164-156-11	s	CAPACITOR,CERAMIC 0.1MF/25V F
C1655	1-128-393-11	s	CAPACITOR,ELECT 100MF/10V
C1656	1-164-156-11	s	CAPACITOR,CERAMIC 0.1MF/25V F
C1657	1-164-156-11	s	CAPACITOR,CERAMIC 0.1MF/25V F
C1658	1-164-156-11	s	CAPACITOR,CERAMIC 0.1MF/25V F
C1659	1-164-156-11	s	CAPACITOR,CERAMIC 0.1MF/25V F
C1660	1-164-156-11	s	CAPACITOR,CERAMIC 0.1MF/25V F
C1661	1-164-156-11	s	CAPACITOR,CERAMIC 0.1MF/25V F
C1662	1-164-156-11	s	CAPACITOR,CERAMIC 0.1MF/25V F
C1663	1-164-156-11	s	CAPACITOR,CERAMIC 0.1MF/25V F
C1757	1-128-393-11	s	CAPACITOR,ELECT 100MF/10V
C1758	1-128-393-11	s	CAPACITOR,ELECT 100MF/10V
C1761	1-164-156-11	s	CAPACITOR,CERAMIC 0.1MF/25V F
C1763	1-115-156-11	s	CAPACITOR,CERAMIC 1MF/10V(1608
C1765	1-164-156-11	s	CAPACITOR,CERAMIC 0.1MF/25V F
C1767	1-164-156-11	s	CAPACITOR,CERAMIC 0.1MF/25V F
C1769	1-164-156-11	s	CAPACITOR,CERAMIC 0.1MF/25V F
C1771	1-164-156-11	s	CAPACITOR,CERAMIC 0.1MF/25V F
C1773	1-164-156-11	s	CAPACITOR,CERAMIC 0.1MF/25V F
C1775	1-164-156-11	s	CAPACITOR,CERAMIC 0.1MF/25V F
C1777	1-164-156-11	s	CAPACITOR,CERAMIC 0.1MF/25V F
C1779	1-162-927-11	s	CAPACITOR,CERAMIC 100PF/50V CH
C1781	1-164-217-11	s	CAPACITOR,CERAMIC 150PF/50V CH
C1782	1-164-217-11	s	CAPACITOR,CERAMIC 150PF/50V CH
C1785	1-164-156-11	s	CAPACITOR,CERAMIC 0.1MF/25V F
C1790	1-164-156-11	s	CAPACITOR,CERAMIC 0.1MF/25V F
C1791	1-164-156-11	s	CAPACITOR,CERAMIC 0.1MF/25V F
CN1	1-770-677-11	o	CONNECTOR,BOARD TO BOARD 50P
CN2	1-770-677-11	o	CONNECTOR,BOARD TO BOARD 50P
CN103	1-569-775-21	o	PIN, CONNECTOR 5P
CN1001	1-778-532-11	o	CONNECTOR, BOARD TO BOARD 80P
CN1002	1-778-532-11	o	CONNECTOR, BOARD TO BOARD 80P
CN1003	1-778-532-11	o	CONNECTOR, BOARD TO BOARD 80P
CN1451	1-580-789-21	o	PIN,CONNECTOR (SMD) 6P
CN1452	1-760-388-11	o	CONNECTOR PIN (SMD) 9 PIN
CN1453	1-760-388-11	o	CONNECTOR PIN (SMD) 9 PIN
CN1454	1-770-677-11	o	CONNECTOR,BOARD TO BOARD 50P
CN1455	1-770-677-11	o	CONNECTOR,BOARD TO BOARD 50P
D200	8-719-941-23	s	DIODE DA204U
D201	8-719-941-86	s	DIODE DAN202U
D202	8-719-941-09	s	DIODE DAP202U
D300	8-719-941-09	s	DIODE DAP202U
D301	8-719-048-43	s	DIODE MA795
D302	8-719-048-43	s	DIODE MA795
D605	8-719-987-69	s	DIODE DAN217
D1101	8-719-041-39	s	DIODE KV1470 (5MA)
D1355	8-719-041-39	s	DIODE KV1470 (5MA)
D1356	8-719-027-95	s	DIODE HSM88WK

(SSP-23 BOARD (for DSR-1600/P))

Ref. No. or Q'ty	Part No.	SP	Description
D1751	8-719-041-39	s	DIODE KV1470 (5MA)
IC1	8-759-442-54	s	IC RH5RL50AA-T1
IC200	8-759-337-40	s	IC NJM2904V(TE2)
IC201	8-759-491-46	s	IC TC74VHCT04AFT (EL)
IC202	8-759-348-69	s	IC HD6415108RF10
IC203	8-759-523-93	s	IC TC74VHC27FT (EL)
IC204	8-759-523-81	s	IC TC74VHC08FT(EL)
IC205	8-759-523-94	s	IC TC74VHC32FT(EL)
IC206	8-759-523-79	s	IC TC74VHC02FT
IC207	8-759-523-82	s	IC TC74VHC10FT (EL)
IC208	8-759-523-93	s	IC TC74VHC27FT (EL)
IC209	8-759-523-83	s	IC TC74VHC11FT(EL)
IC211	8-759-537-83	s	IC MBM29F400BC-70PFTN
IC212	8-759-491-50	s	IC TC74VHCT244AFT(EL)
IC213	8-759-491-51	s	IC TC74VHCT245AFT(EL)
IC214	8-759-497-29	s	IC LC35256DM-70-TLM
IC215	8-759-497-29	s	IC LC35256DM-70-TLM
IC301	8-759-064-36	s	IC MB88346BPFV
IC302	8-759-337-40	s	IC NJM2904V(TE2)
IC303	8-759-273-87	s	IC NJM2901V (TE2)
IC304	8-759-466-53	s	IC NJM2060V(TE2)
IC305	8-759-338-95	s	IC NJM2903V (TE2)
IC306	8-759-523-02	s	IC TC74HC4053AFT(EL)
IC307	8-759-444-87	s	IC NJM324V (TE2)
IC308	8-759-273-87	s	IC NJM2901V (TE2)
IC309	8-759-466-53	s	IC NJM2060V(TE2)
IC310	8-759-523-96	s	IC TC74VHC86FT (EL)
IC311	8-759-523-02	s	IC TC74HC4053AFT(EL)
IC312	8-759-523-02	s	IC TC74HC4053AFT(EL)
IC313	8-759-466-53	s	IC NJM2060V(TE2)
IC314	8-759-278-58	s	IC NJM4558V (TE2)
IC400	8-759-259-77	s	IC PQ20VZ5U
IC402	8-759-271-88	s	IC TC7SHU04FU
IC405	8-759-524-07	s	IC TC74VHC138FT(EL)
IC500	8-759-523-81	s	IC TC74VHC08FT(EL)
IC501	8-759-525-99	s	IC HD6437021SC02X
IC503	8-759-577-24	s	IC KM6161000BLT-5L
IC504	8-759-523-94	s	IC TC74VHC32FT(EL)
IC505	8-759-327-80	s	IC S-80745SN-D9-T1
IC506	8-759-084-79	s	IC TC7S14F
IC507	8-759-524-07	s	IC TC74VHC138FT(EL)
IC508	8-759-524-07	s	IC TC74VHC138FT(EL)
IC509	8-759-490-41	s	IC TC74VHCT541AFT(EL)
IC510	8-759-491-50	s	IC TC74VHCT244AFT(EL)
IC511	8-759-524-28	s	IC TC74VHC245FT(EL)
IC512	8-759-479-32	s	IC SN75C1168NS (E05)
IC513	8-759-524-28	s	IC TC74VHC245FT(EL)
IC514	8-759-524-04	s	IC TC74VHC125FT (EL)
IC515	8-759-491-51	s	IC TC74VHCT245AFT(EL)
IC516	8-759-523-94	s	IC TC74VHC32FT(EL)
IC517	8-759-491-46	s	IC TC74VHCT04AFT (EL)
IC518	8-759-524-07	s	IC TC74VHC138FT(EL)
IC519	8-759-486-26	s	IC MBM29F800BA-70PFTN
IC600	8-759-399-65	s	IC M48Z58Y-70MH1TR
IC601	8-759-524-28	s	IC TC74VHC245FT(EL)
IC602	8-759-490-41	s	IC TC74VHCT541AFT(EL)
IC603	8-759-270-56	s	IC SN74HC377ANS (E20)
IC604	8-759-369-73	s	IC NJM4556AM

(SSP-23 BOARD (for DSR-1600/P))

Ref. No. or Q'ty	Part No.	SP	Description
IC1071	8-759-259-77	s	IC PQ20VZ5U
IC1101	8-759-524-50	s	IC TC74VHC541FT(EL)
IC1102	8-759-490-41	s	IC TC74VHCT541AFT(EL)
IC1103	8-759-362-16	s	IC CXD2913AQ
IC1104	8-729-039-85	s	IC UPC29L05T
IC1105	8-759-702-02	s	IC NJM062M
IC1106	8-759-679-78	s	IC CXD9127R
IC1155	8-759-524-50	s	IC TC74VHC541FT(EL)
IC1156	8-759-524-50	s	IC TC74VHC541FT(EL)
IC1157	8-759-524-50	s	IC TC74VHC541FT(EL)
IC1158	8-759-524-50	s	IC TC74VHC541FT(EL)
IC1159	8-759-524-50	s	IC TC74VHC541FT(EL)
IC1251	8-759-474-69	s	IC UPD82094GD-001-LKL
IC1252	8-759-433-17	s	IC UPD482445LG4-B10-9MH-E2-HDC
IC1351	8-759-271-88	s	IC TC7SHU04FU
IC1355	8-759-490-41	s	IC TC74VHCT541AFT(EL)
IC1356	8-759-490-41	s	IC TC74VHCT541AFT(EL)
IC1357	8-759-196-96	s	IC TC7SH08FU (TE85R)
IC1358	8-752-378-75	s	IC CXD3106R
IC1361	8-759-271-88	s	IC TC7SHU04FU
IC1451	8-759-524-50	s	IC TC74VHC541FT(EL)
IC1452	8-759-524-50	s	IC TC74VHC541FT(EL)
IC1453	8-759-524-50	s	IC TC74VHC541FT(EL)
IC1454	8-759-524-50	s	IC TC74VHC541FT(EL)
IC1455	8-759-524-50	s	IC TC74VHC541FT(EL)
IC1456	8-759-537-83	s	IC MBM29F400BC-70PFTN
IC1457	8-759-655-86	o	IC XC9536VQ44-DSR2000-DPR-V10
IC1458	8-759-537-83	s	IC MBM29F400BC-70PFTN
IC1459	8-759-655-86	o	IC XC9536VQ44-DSR2000-DPR-V10
IC1551	8-759-259-77	s	IC PQ20VZ5U
IC1553	8-759-589-36	s	IC MB81F641642C-103LFN-B
IC1604	8-759-523-97	s	IC TC74VHC123AFT(EL)
IC1607	8-759-523-79	s	IC TC74VHC02FT
IC1610	8-759-523-79	s	IC TC74VHC02FT
IC1611	8-759-523-95	s	IC TC74VHC74FT(EL)
IC1617	8-759-490-41	s	IC TC74VHCT541AFT(EL)
IC1621	8-759-524-50	s	IC TC74VHC541FT(EL)
IC1622	8-759-524-19	s	IC TC74VHC164FT(EL)
IC1623	8-759-326-71	s	IC CXD8517Q
IC1624	8-759-326-71	s	IC CXD8517Q
IC1651	8-759-523-94	s	IC TC74VHC32FT(EL)
IC1653	8-759-645-48	s	IC IDT71V016S15PH-TL
IC1654	8-752-391-87	s	IC CXD2712R
IC1752	8-759-702-02	s	IC NJM062M
IC1757	8-729-039-85	s	IC UPC29L05T
IC1758	8-759-362-16	s	IC CXD2913AQ
IC1763	8-759-524-50	s	IC TC74VHC541FT(EL)
IC1764	8-759-490-41	s	IC TC74VHCT541AFT(EL)
L400	1-414-398-11	s	INDUCTOR (SMD) 10UH
L401	1-414-398-11	s	INDUCTOR (SMD) 10UH
L1071	1-414-398-11	s	INDUCTOR (SMD) 10UH
L1072	1-414-398-11	s	INDUCTOR (SMD) 10UH
L1101	1-414-398-11	s	INDUCTOR (SMD) 10UH
L1102	1-414-398-11	s	INDUCTOR (SMD) 10UH
L1152	1-414-398-11	s	INDUCTOR (SMD) 10UH
L1153	1-414-398-11	s	INDUCTOR (SMD) 10UH
L1251	1-414-398-11	s	INDUCTOR (SMD) 10UH
L1355	1-414-398-11	s	INDUCTOR (SMD) 10UH

(SSP-23 BOARD (for DSR-1600/P))

Ref. No. or Q'ty	Part No.	SP	Description
L1356	1-412-173-11	s	MICRO INDUCTOR 0.82UH
L1357	1-414-398-11	s	INDUCTOR (SMD) 10UH
L1451	1-414-398-11	s	INDUCTOR (SMD) 10UH
L1452	1-424-643-11	s	COIL, CHOKE 10UH
L1453	1-414-398-11	s	INDUCTOR (SMD) 10UH
L1454	1-414-398-11	s	INDUCTOR (SMD) 10UH
L1455	1-424-643-11	s	COIL, CHOKE 10UH
L1456	1-424-643-11	s	COIL, CHOKE 10UH
L1457	1-424-643-11	s	COIL, CHOKE 10UH
L1551	1-414-398-11	s	INDUCTOR (SMD) 10UH
L1553	1-414-398-11	s	INDUCTOR (SMD) 10UH
L1604	1-412-939-11	s	INDUCTOR 1.0UH (2520)
L1605	1-412-939-11	s	INDUCTOR 1.0UH (2520)
L1651	1-414-398-11	s	INDUCTOR (SMD) 10UH
L1753	1-414-521-11	s	INDUCTOR, SMALL TYPE 10.0UH
LV1101	1-411-984-11	s	COIL, VARIABLE
LV1751	1-411-984-11	s	COIL, VARIABLE
PS1451 ⚠	1-533-282-21	s	CIRCUIT PROTECTOR 2A (3225)
PS1452 ⚠	1-533-282-21	s	CIRCUIT PROTECTOR 2A (3225)
PS1453 ⚠	1-533-282-21	s	CIRCUIT PROTECTOR 2A (3225)
PS1454 ⚠	1-533-282-21	s	CIRCUIT PROTECTOR 2A (3225)
PS1455 ⚠	1-533-282-21	s	CIRCUIT PROTECTOR 2A (3225)
Q500	8-729-117-32	s	TRANSISTOR 2SC4177
Q600	8-729-027-38	s	TRANSISTOR DTA144EAK-T146
Q601	8-729-027-38	s	TRANSISTOR DTA144EAK-T146
Q602	8-729-422-44	s	TRANSISTOR 2SK663
Q603	8-729-422-44	s	TRANSISTOR 2SK663
Q1451	8-729-029-14	s	TRANSISTOR DTC144EUA-T106
Q1452	8-729-117-32	s	TRANSISTOR 2SC4177
Q1453	8-729-117-32	s	TRANSISTOR 2SC4177
Q1454	8-729-029-14	s	TRANSISTOR DTC144EUA-T106
Q1456	8-729-029-14	s	TRANSISTOR DTC144EUA-T106
Q1457	8-729-029-14	s	TRANSISTOR DTC144EUA-T106
Q1458	8-729-029-14	s	TRANSISTOR DTC144EUA-T106
Q1459	8-729-029-14	s	TRANSISTOR DTC144EUA-T106
Q1460	8-729-029-14	s	TRANSISTOR DTC144EUA-T106
R200	1-216-837-11	s	RESISTOR,CHIP 22K 1/16W 1608
R201	1-216-837-11	s	RESISTOR,CHIP 22K 1/16W 1608
R203	1-216-837-11	s	RESISTOR,CHIP 22K 1/16W 1608
R204	1-218-895-11	s	RESISTOR,CHIP 100K 1/16W(1608)
R205	1-218-891-11	s	RESISTOR,CHIP 68K 1/16W (1608)
R206	1-216-841-11	s	RESISTOR, CHIP 47K 1/16W 1608
R207	1-216-837-11	s	RESISTOR,CHIP 22K 1/16W 1608
R208	1-216-837-11	s	RESISTOR,CHIP 22K 1/16W 1608
R209	1-218-871-11	s	RESISTOR,CHIP 10K 1/16W (1608)
R210	1-216-841-11	s	RESISTOR, CHIP 47K 1/16W 1608
R211	1-216-837-11	s	RESISTOR,CHIP 22K 1/16W 1608
R212	1-218-895-11	s	RESISTOR,CHIP 100K 1/16W(1608)
R213	1-216-837-11	s	RESISTOR,CHIP 22K 1/16W 1608
R214	1-216-833-11	s	RESISTOR,CHIP 10K 1/16W (1608)
R215	1-216-841-11	s	RESISTOR, CHIP 47K 1/16W 1608
R216	1-216-833-11	s	RESISTOR,CHIP 10K 1/16W (1608)
R217	1-216-833-11	s	RESISTOR,CHIP 10K 1/16W (1608)
R218	1-216-833-11	s	RESISTOR,CHIP 10K 1/16W (1608)
R219	1-216-841-11	s	RESISTOR, CHIP 47K 1/16W 1608
R220	1-216-809-11	s	RESISTOR,CHIP 100 1/16W 1608
R221	1-216-841-11	s	RESISTOR, CHIP 47K 1/16W 1608
R222	1-216-809-11	s	RESISTOR,CHIP 100 1/16W 1608

(SSP-23 BOARD (for DSR-1600/P))

Ref. No. or Q'ty	Part No.	SP	Description
R223	1-216-805-11	s	RESISTOR,CHIP 47 1/16W 1608
R224	1-216-805-11	s	RESISTOR,CHIP 47 1/16W 1608
R227	1-216-841-11	s	RESISTOR, CHIP 47K 1/16W 1608
R228	1-216-841-11	s	RESISTOR, CHIP 47K 1/16W 1608
R229	1-216-841-11	s	RESISTOR, CHIP 47K 1/16W 1608
R231	1-216-841-11	s	RESISTOR, CHIP 47K 1/16W 1608
R232	1-216-821-11	s	RESISTOR,CHIP 1.0K 1/16W(1608)
R233	1-216-805-11	s	RESISTOR,CHIP 47 1/16W 1608
R234	1-216-805-11	s	RESISTOR,CHIP 47 1/16W 1608
R235	1-216-805-11	s	RESISTOR,CHIP 47 1/16W 1608
R236	1-216-837-11	s	RESISTOR,CHIP 22K 1/16W 1608
R237	1-216-837-11	s	RESISTOR,CHIP 22K 1/16W 1608
R300	1-216-841-11	s	RESISTOR, CHIP 47K 1/16W 1608
R301	1-218-883-11	s	RESISTOR,CHIP 33K 1/16W (1608)
R302	1-218-879-11	s	RESISTOR,CHIP 22K 1/16W (1608)
R303	1-216-821-11	s	RESISTOR,CHIP 1.0K 1/16W(1608)
R304	1-216-833-11	s	RESISTOR,CHIP 10K 1/16W (1608)
R305	1-216-833-11	s	RESISTOR,CHIP 10K 1/16W (1608)
R306	1-216-853-11	s	RESISTOR,CHIP 470K 1/16W(1608)
R307	1-216-825-11	s	RESISTOR,CHIP 2.2K 1/16W 1608
R308	1-218-891-11	s	RESISTOR,CHIP 68K 1/16W (1608)
R309	1-218-891-11	s	RESISTOR,CHIP 68K 1/16W (1608)
R310	1-218-891-11	s	RESISTOR,CHIP 68K 1/16W (1608)
R311	1-216-839-11	s	RESISTOR,CHIP 33K 1/16W 1608
R312	1-216-845-11	s	RESISTOR,CHIP 100K 1/16W(1608)
R313	1-216-833-11	s	RESISTOR,CHIP 10K 1/16W (1608)
R314	1-216-833-11	s	RESISTOR,CHIP 10K 1/16W (1608)
R315	1-216-853-11	s	RESISTOR,CHIP 470K 1/16W(1608)
R316	1-216-825-11	s	RESISTOR,CHIP 2.2K 1/16W 1608
R317	1-218-891-11	s	RESISTOR,CHIP 68K 1/16W (1608)
R318	1-218-891-11	s	RESISTOR,CHIP 68K 1/16W (1608)
R319	1-218-891-11	s	RESISTOR,CHIP 68K 1/16W (1608)
R320	1-216-839-11	s	RESISTOR,CHIP 33K 1/16W 1608
R321	1-216-845-11	s	RESISTOR,CHIP 100K 1/16W(1608)
R322	1-216-833-11	s	RESISTOR,CHIP 10K 1/16W (1608)
R323	1-216-833-11	s	RESISTOR,CHIP 10K 1/16W (1608)
R324	1-216-853-11	s	RESISTOR,CHIP 470K 1/16W(1608)
R325	1-216-825-11	s	RESISTOR,CHIP 2.2K 1/16W 1608
R326	1-216-841-11	s	RESISTOR, CHIP 47K 1/16W 1608
R328	1-216-833-11	s	RESISTOR,CHIP 10K 1/16W (1608)
R329	1-216-833-11	s	RESISTOR,CHIP 10K 1/16W (1608)
R330	1-216-833-11	s	RESISTOR,CHIP 10K 1/16W (1608)
R331	1-216-853-11	s	RESISTOR,CHIP 470K 1/16W(1608)
R332	1-216-841-11	s	RESISTOR, CHIP 47K 1/16W 1608
R333	1-216-826-11	s	RESISTOR,CHIP 2.7K 1/16W(1608)
R334	1-216-825-11	s	RESISTOR,CHIP 2.2K 1/16W 1608
R335	1-216-837-11	s	RESISTOR,CHIP 22K 1/16W 1608
R336	1-216-837-11	s	RESISTOR,CHIP 22K 1/16W 1608
R337	1-216-829-11	s	RESISTOR,CHIP 4.7K 1/16W(1608)
R338	1-216-829-11	s	RESISTOR,CHIP 4.7K 1/16W(1608)
R339	1-216-833-11	s	RESISTOR,CHIP 10K 1/16W (1608)
R340	1-216-837-11	s	RESISTOR,CHIP 22K 1/16W 1608
R341	1-216-839-11	s	RESISTOR,CHIP 33K 1/16W 1608
R342	1-216-839-11	s	RESISTOR,CHIP 33K 1/16W 1608
R343	1-216-839-11	s	RESISTOR,CHIP 33K 1/16W 1608
R344	1-216-839-11	s	RESISTOR,CHIP 33K 1/16W 1608
R345	1-216-841-11	s	RESISTOR, CHIP 47K 1/16W 1608
R346	1-216-841-11	s	RESISTOR, CHIP 47K 1/16W 1608
R347	1-216-853-11	s	RESISTOR,CHIP 470K 1/16W(1608)

(SSP-23 BOARD (for DSR-1600/P))

Ref. No. or Q'ty	Part No.	SP	Description
R348	1-216-837-11	s	RESISTOR,CHIP 22K 1/16W 1608
R349	1-216-837-11	s	RESISTOR,CHIP 22K 1/16W 1608
R350	1-216-837-11	s	RESISTOR,CHIP 22K 1/16W 1608
R351	1-216-842-11	s	RESISTOR,CHIP 56K 1/16W(1608)
R352	1-216-841-11	s	RESISTOR, CHIP 47K 1/16W 1608
R353	1-218-871-11	s	RESISTOR,CHIP 10K 1/16W (1608)
R354	1-218-871-11	s	RESISTOR,CHIP 10K 1/16W (1608)
R355	1-218-881-11	s	RESISTOR, CHIP 27K 1/16W(1608)
R356	1-218-881-11	s	RESISTOR, CHIP 27K 1/16W(1608)
R357	1-218-891-11	s	RESISTOR,CHIP 68K 1/16W (1608)
R358	1-218-891-11	s	RESISTOR,CHIP 68K 1/16W (1608)
R359	1-218-891-11	s	RESISTOR,CHIP 68K 1/16W (1608)
R360	1-216-839-11	s	RESISTOR,CHIP 33K 1/16W 1608
R361	1-218-891-11	s	RESISTOR,CHIP 68K 1/16W (1608)
R362	1-216-833-11	s	RESISTOR,CHIP 10K 1/16W (1608)
R363	1-216-833-11	s	RESISTOR,CHIP 10K 1/16W (1608)
R364	1-216-853-11	s	RESISTOR,CHIP 470K 1/16W(1608)
R365	1-216-825-11	s	RESISTOR,CHIP 2.2K 1/16W 1608
R366	1-218-891-11	s	RESISTOR,CHIP 68K 1/16W (1608)
R367	1-218-891-11	s	RESISTOR,CHIP 68K 1/16W (1608)
R368	1-218-891-11	s	RESISTOR,CHIP 68K 1/16W (1608)
R369	1-216-839-11	s	RESISTOR,CHIP 33K 1/16W 1608
R370	1-218-891-11	s	RESISTOR,CHIP 68K 1/16W (1608)
R371	1-216-833-11	s	RESISTOR,CHIP 10K 1/16W (1608)
R372	1-216-833-11	s	RESISTOR,CHIP 10K 1/16W (1608)
R373	1-216-853-11	s	RESISTOR,CHIP 470K 1/16W(1608)
R374	1-216-825-11	s	RESISTOR,CHIP 2.2K 1/16W 1608
R375	1-216-842-11	s	RESISTOR,CHIP 56K 1/16W(1608)
R376	1-216-842-11	s	RESISTOR,CHIP 56K 1/16W(1608)
R377	1-216-842-11	s	RESISTOR,CHIP 56K 1/16W(1608)
R378	1-216-842-11	s	RESISTOR,CHIP 56K 1/16W(1608)
R379	1-216-841-11	s	RESISTOR, CHIP 47K 1/16W 1608
R381	1-216-829-11	s	RESISTOR,CHIP 4.7K 1/16W(1608)
R382	1-216-833-11	s	RESISTOR,CHIP 10K 1/16W (1608)
R383	1-216-833-11	s	RESISTOR,CHIP 10K 1/16W (1608)
R384	1-216-853-11	s	RESISTOR,CHIP 470K 1/16W(1608)
R385	1-216-841-11	s	RESISTOR, CHIP 47K 1/16W 1608
R386	1-216-826-11	s	RESISTOR,CHIP 2.7K 1/16W(1608)
R387	1-216-825-11	s	RESISTOR,CHIP 2.2K 1/16W 1608
R388	1-216-837-11	s	RESISTOR,CHIP 22K 1/16W 1608
R389	1-216-837-11	s	RESISTOR,CHIP 22K 1/16W 1608
R390	1-216-837-11	s	RESISTOR,CHIP 22K 1/16W 1608
R391	1-216-839-11	s	RESISTOR,CHIP 33K 1/16W 1608
R392	1-216-837-11	s	RESISTOR,CHIP 22K 1/16W 1608
R393	1-216-839-11	s	RESISTOR,CHIP 33K 1/16W 1608
R394	1-216-839-11	s	RESISTOR,CHIP 33K 1/16W 1608
R395	1-216-841-11	s	RESISTOR, CHIP 47K 1/16W 1608
R396	1-216-841-11	s	RESISTOR, CHIP 47K 1/16W 1608
R397	1-216-841-11	s	RESISTOR, CHIP 47K 1/16W 1608
R398	1-216-845-11	s	RESISTOR,CHIP 100K 1/16W(1608)
R399	1-216-842-11	s	RESISTOR,CHIP 56K 1/16W(1608)
R400	1-218-891-11	s	RESISTOR,CHIP 68K 1/16W (1608)
R401	1-218-891-11	s	RESISTOR,CHIP 68K 1/16W (1608)
R402	1-218-891-11	s	RESISTOR,CHIP 68K 1/16W (1608)
R403	1-216-839-11	s	RESISTOR,CHIP 33K 1/16W 1608
R404	1-218-891-11	s	RESISTOR,CHIP 68K 1/16W (1608)
R405	1-216-833-11	s	RESISTOR,CHIP 10K 1/16W (1608)
R406	1-216-833-11	s	RESISTOR,CHIP 10K 1/16W (1608)
R407	1-216-853-11	s	RESISTOR,CHIP 470K 1/16W(1608)

(SSP-23 BOARD (for DSR-1600/P))

Ref. No. or Q'ty	Part No.	SP	Description
R408	1-216-825-11	s	RESISTOR,CHIP 2.2K 1/16W 1608
R409	1-218-891-11	s	RESISTOR,CHIP 68K 1/16W (1608)
R410	1-218-891-11	s	RESISTOR,CHIP 68K 1/16W (1608)
R411	1-218-891-11	s	RESISTOR,CHIP 68K 1/16W (1608)
R412	1-216-839-11	s	RESISTOR,CHIP 33K 1/16W 1608
R413	1-218-891-11	s	RESISTOR,CHIP 68K 1/16W (1608)
R414	1-216-833-11	s	RESISTOR,CHIP 10K 1/16W (1608)
R415	1-216-833-11	s	RESISTOR,CHIP 10K 1/16W (1608)
R416	1-216-853-11	s	RESISTOR,CHIP 470K 1/16W(1608)
R417	1-216-825-11	s	RESISTOR,CHIP 2.2K 1/16W 1608
R418	1-216-842-11	s	RESISTOR,CHIP 56K 1/16W(1608)
R419	1-216-842-11	s	RESISTOR,CHIP 56K 1/16W(1608)
R420	1-216-842-11	s	RESISTOR,CHIP 56K 1/16W(1608)
R421	1-216-842-11	s	RESISTOR,CHIP 56K 1/16W(1608)
R450	1-216-821-11	s	RESISTOR,CHIP 1.0K 1/16W(1608)
R451	1-216-821-11	s	RESISTOR,CHIP 1.0K 1/16W(1608)
R452	1-216-841-11	s	RESISTOR, CHIP 47K 1/16W 1608
R453	1-216-857-11	s	RESISTOR,CHIP 1M 1/16W(1608)
R454	1-216-817-11	s	RESISTOR,CHIP 470 1/16W 1608
R456	1-216-837-11	s	RESISTOR,CHIP 22K 1/16W 1608
R457	1-216-837-11	s	RESISTOR,CHIP 22K 1/16W 1608
R458	1-216-809-11	s	RESISTOR,CHIP 100 1/16W 1608
R459	1-216-809-11	s	RESISTOR,CHIP 100 1/16W 1608
R460	1-216-829-11	s	RESISTOR,CHIP 4.7K 1/16W(1608)
R461	1-216-837-11	s	RESISTOR,CHIP 22K 1/16W 1608
R463	1-216-809-11	s	RESISTOR,CHIP 100 1/16W 1608
R464	1-216-837-11	s	RESISTOR,CHIP 22K 1/16W 1608
R466	1-216-837-11	s	RESISTOR,CHIP 22K 1/16W 1608
R468	1-216-864-11	s	RESISTOR,CHIP 0 1/16W (1608)
R469	1-216-864-11	s	RESISTOR,CHIP 0 1/16W (1608)
R470	1-216-809-11	s	RESISTOR,CHIP 100 1/16W 1608
R472	1-216-841-11	s	RESISTOR, CHIP 47K 1/16W 1608
R473	1-216-797-11	s	RESISTOR,CHIP 10 1/16W 1608
R474	1-216-801-11	s	RESISTOR,CHIP 22 1/16W (1608)
R478	1-216-837-11	s	RESISTOR,CHIP 22K 1/16W 1608
R479	1-216-837-11	s	RESISTOR,CHIP 22K 1/16W 1608
R480	1-216-837-11	s	RESISTOR,CHIP 22K 1/16W 1608
R481	1-216-837-11	s	RESISTOR,CHIP 22K 1/16W 1608
R482	1-216-809-11	s	RESISTOR,CHIP 100 1/16W 1608
R500	1-216-805-11	s	RESISTOR,CHIP 47 1/16W 1608
R501	1-216-805-11	s	RESISTOR,CHIP 47 1/16W 1608
R502	1-216-805-11	s	RESISTOR,CHIP 47 1/16W 1608
R503	1-216-837-11	s	RESISTOR,CHIP 22K 1/16W 1608
R504	1-216-801-11	s	RESISTOR,CHIP 22 1/16W (1608)
R505	1-216-841-11	s	RESISTOR, CHIP 47K 1/16W 1608
R507	1-216-841-11	s	RESISTOR, CHIP 47K 1/16W 1608
R509	1-216-845-11	s	RESISTOR,CHIP 100K 1/16W(1608)
R510	1-216-809-11	s	RESISTOR,CHIP 100 1/16W 1608
R511	1-216-821-11	s	RESISTOR,CHIP 1.0K 1/16W(1608)
R513	1-216-841-11	s	RESISTOR, CHIP 47K 1/16W 1608
R514	1-216-809-11	s	RESISTOR,CHIP 100 1/16W 1608
R515	1-216-841-11	s	RESISTOR, CHIP 47K 1/16W 1608
R516	1-216-801-11	s	RESISTOR,CHIP 22 1/16W (1608)
R517	1-216-809-11	s	RESISTOR,CHIP 100 1/16W 1608
R518	1-216-864-11	s	RESISTOR,CHIP 0 1/16W (1608)
R524	1-216-801-11	s	RESISTOR,CHIP 22 1/16W (1608)
R526	1-216-801-11	s	RESISTOR,CHIP 22 1/16W (1608)
R600	1-216-801-11	s	RESISTOR,CHIP 22 1/16W (1608)
R601	1-216-801-11	s	RESISTOR,CHIP 22 1/16W (1608)

(SSP-23 BOARD (for DSR-1600/P))

Ref. No. or Q'ty	Part No.	SP	Description
R602	1-216-801-11	s	RESISTOR,CHIP 22 1/16W (1608)
R603	1-216-801-11	s	RESISTOR,CHIP 22 1/16W (1608)
R604	1-216-801-11	s	RESISTOR,CHIP 22 1/16W (1608)
R605	1-216-801-11	s	RESISTOR,CHIP 22 1/16W (1608)
R612	1-211-990-11	s	RESISTOR,CHIP 75 1/16W (1608)
R614	1-216-832-11	s	RESISTOR,CHIP 8.2K 1/16W 1608
R615	1-216-837-11	s	RESISTOR,CHIP 22K 1/16W 1608
R616	1-216-837-11	s	RESISTOR,CHIP 22K 1/16W 1608
R617	1-216-827-11	s	RESISTOR, CHIP 3.3K 1/16W 1608
R619	1-216-857-11	s	RESISTOR,CHIP 1M 1/16W(1608)
R620	1-216-857-11	s	RESISTOR,CHIP 1M 1/16W(1608)
R621	1-216-821-11	s	RESISTOR,CHIP 1.0K 1/16W(1608)
R622	1-216-857-11	s	RESISTOR,CHIP 1M 1/16W(1608)
R623	1-216-857-11	s	RESISTOR,CHIP 1M 1/16W(1608)
R626	1-216-826-11	s	RESISTOR,CHIP 2.7K 1/16W(1608)
R628	1-216-833-11	s	RESISTOR,CHIP 10K 1/16W (1608)
R908	1-216-801-11	s	RESISTOR,CHIP 22 1/16W (1608)
R909	1-216-801-11	s	RESISTOR,CHIP 22 1/16W (1608)
R910	1-216-801-11	s	RESISTOR,CHIP 22 1/16W (1608)
R911	1-216-801-11	s	RESISTOR,CHIP 22 1/16W (1608)
R912	1-216-801-11	s	RESISTOR,CHIP 22 1/16W (1608)
R913	1-216-801-11	s	RESISTOR,CHIP 22 1/16W (1608)
R914	1-216-801-11	s	RESISTOR,CHIP 22 1/16W (1608)
R915	1-216-801-11	s	RESISTOR,CHIP 22 1/16W (1608)
R916	1-216-801-11	s	RESISTOR,CHIP 22 1/16W (1608)
R917	1-216-801-11	s	RESISTOR,CHIP 22 1/16W (1608)
R918	1-216-801-11	s	RESISTOR,CHIP 22 1/16W (1608)
R919	1-216-801-11	s	RESISTOR,CHIP 22 1/16W (1608)
R920	1-216-801-11	s	RESISTOR,CHIP 22 1/16W (1608)
R921	1-216-801-11	s	RESISTOR,CHIP 22 1/16W (1608)
R922	1-216-801-11	s	RESISTOR,CHIP 22 1/16W (1608)
R923	1-216-801-11	s	RESISTOR,CHIP 22 1/16W (1608)
R924	1-216-801-11	s	RESISTOR,CHIP 22 1/16W (1608)
R925	1-216-801-11	s	RESISTOR,CHIP 22 1/16W (1608)
R926	1-216-801-11	s	RESISTOR,CHIP 22 1/16W (1608)
R927	1-216-801-11	s	RESISTOR,CHIP 22 1/16W (1608)
R928	1-216-801-11	s	RESISTOR,CHIP 22 1/16W (1608)
R929	1-216-801-11	s	RESISTOR,CHIP 22 1/16W (1608)
R930	1-216-801-11	s	RESISTOR,CHIP 22 1/16W (1608)
R931	1-216-801-11	s	RESISTOR,CHIP 22 1/16W (1608)
R932	1-216-801-11	s	RESISTOR,CHIP 22 1/16W (1608)
R933	1-216-801-11	s	RESISTOR,CHIP 22 1/16W (1608)
R934	1-216-801-11	s	RESISTOR,CHIP 22 1/16W (1608)
R935	1-216-801-11	s	RESISTOR,CHIP 22 1/16W (1608)
R936	1-216-801-11	s	RESISTOR,CHIP 22 1/16W (1608)
R937	1-216-801-11	s	RESISTOR,CHIP 22 1/16W (1608)
R938	1-216-801-11	s	RESISTOR,CHIP 22 1/16W (1608)
R948	1-216-801-11	s	RESISTOR,CHIP 22 1/16W (1608)
R949	1-216-801-11	s	RESISTOR,CHIP 22 1/16W (1608)
R950	1-216-801-11	s	RESISTOR,CHIP 22 1/16W (1608)
R951	1-216-801-11	s	RESISTOR,CHIP 22 1/16W (1608)
R952	1-216-801-11	s	RESISTOR,CHIP 22 1/16W (1608)
R953	1-216-801-11	s	RESISTOR,CHIP 22 1/16W (1608)
R954	1-216-801-11	s	RESISTOR,CHIP 22 1/16W (1608)
R955	1-216-801-11	s	RESISTOR,CHIP 22 1/16W (1608)
R956	1-216-801-11	s	RESISTOR,CHIP 22 1/16W (1608)
R957	1-216-801-11	s	RESISTOR,CHIP 22 1/16W (1608)
R960	1-216-801-11	s	RESISTOR,CHIP 22 1/16W (1608)
R961	1-216-801-11	s	RESISTOR,CHIP 22 1/16W (1608)

(SSP-23 BOARD (for DSR-1600/P))

Ref. No. or Q'ty	Part No.	SP	Description
R962	1-216-801-11	s	RESISTOR,CHIP 22 1/16W (1608)
R963	1-216-801-11	s	RESISTOR,CHIP 22 1/16W (1608)
R964	1-216-801-11	s	RESISTOR,CHIP 22 1/16W (1608)
R965	1-216-801-11	s	RESISTOR,CHIP 22 1/16W (1608)
R966	1-216-801-11	s	RESISTOR,CHIP 22 1/16W (1608)
R967	1-216-801-11	s	RESISTOR,CHIP 22 1/16W (1608)
R968	1-216-801-11	s	RESISTOR,CHIP 22 1/16W (1608)
R969	1-216-801-11	s	RESISTOR,CHIP 22 1/16W (1608)
R970	1-216-801-11	s	RESISTOR,CHIP 22 1/16W (1608)
R971	1-216-801-11	s	RESISTOR,CHIP 22 1/16W (1608)
R972	1-216-801-11	s	RESISTOR,CHIP 22 1/16W (1608)
R973	1-216-801-11	s	RESISTOR,CHIP 22 1/16W (1608)
R974	1-216-801-11	s	RESISTOR,CHIP 22 1/16W (1608)
R975	1-216-801-11	s	RESISTOR,CHIP 22 1/16W (1608)
R976	1-216-801-11	s	RESISTOR,CHIP 22 1/16W (1608)
R977	1-216-801-11	s	RESISTOR,CHIP 22 1/16W (1608)
R978	1-216-801-11	s	RESISTOR,CHIP 22 1/16W (1608)
R979	1-216-801-11	s	RESISTOR,CHIP 22 1/16W (1608)
R1004	1-216-801-11	s	RESISTOR,CHIP 22 1/16W (1608)
R1005	1-216-801-11	s	RESISTOR,CHIP 22 1/16W (1608)
R1006	1-216-801-11	s	RESISTOR,CHIP 22 1/16W (1608)
R1007	1-216-801-11	s	RESISTOR,CHIP 22 1/16W (1608)
R1008	1-216-801-11	s	RESISTOR,CHIP 22 1/16W (1608)
R1009	1-216-801-11	s	RESISTOR,CHIP 22 1/16W (1608)
R1010	1-216-801-11	s	RESISTOR,CHIP 22 1/16W (1608)
R1011	1-216-801-11	s	RESISTOR,CHIP 22 1/16W (1608)
R1012	1-216-801-11	s	RESISTOR,CHIP 22 1/16W (1608)
R1026	1-216-801-11	s	RESISTOR,CHIP 22 1/16W (1608)
R1027	1-216-801-11	s	RESISTOR,CHIP 22 1/16W (1608)
R1028	1-216-801-11	s	RESISTOR,CHIP 22 1/16W (1608)
R1029	1-216-801-11	s	RESISTOR,CHIP 22 1/16W (1608)
R1030	1-216-809-11	s	RESISTOR,CHIP 100 1/16W 1608
R1071	1-216-821-11	s	RESISTOR,CHIP 1.0K 1/16W(1608)
R1072	1-216-821-11	s	RESISTOR,CHIP 1.0K 1/16W(1608)
R1073	1-216-845-11	s	RESISTOR,CHIP 100K 1/16W(1608)
R1074	1-216-864-11	s	RESISTOR,CHIP 0 1/16W (1608)
R1075	1-216-864-11	s	RESISTOR,CHIP 0 1/16W (1608)
R1077	1-216-829-11	s	RESISTOR,CHIP 4.7K 1/16W(1608)
R1101	1-216-841-11	s	RESISTOR, CHIP 47K 1/16W 1608
R1102	1-216-838-11	s	RESISTOR CHIP 27K 1/16W(1608)
R1103	1-216-839-11	s	RESISTOR,CHIP 33K 1/16W 1608
R1104	1-216-841-11	s	RESISTOR, CHIP 47K 1/16W 1608
R1105	1-216-864-11	s	RESISTOR,CHIP 0 1/16W (1608)
R1106	1-216-829-11	s	RESISTOR,CHIP 4.7K 1/16W(1608)
R1107	1-216-841-11	s	RESISTOR, CHIP 47K 1/16W 1608
R1109	1-216-835-11	s	RESISTOR,CHIP 15K 1/16W
R1110	1-216-841-11	s	RESISTOR, CHIP 47K 1/16W 1608
R1111	1-216-864-11	s	RESISTOR,CHIP 0 1/16W (1608)
R1112	1-216-845-11	s	RESISTOR,CHIP 100K 1/16W(1608)
R1113	1-216-801-11	s	RESISTOR,CHIP 22 1/16W (1608)
R1114	1-216-801-11	s	RESISTOR,CHIP 22 1/16W (1608)
R1115	1-216-801-11	s	RESISTOR,CHIP 22 1/16W (1608)
R1179	1-216-805-11	s	RESISTOR,CHIP 47 1/16W 1608
R1180	1-216-805-11	s	RESISTOR,CHIP 47 1/16W 1608
R1181	1-216-805-11	s	RESISTOR,CHIP 47 1/16W 1608
R1182	1-216-805-11	s	RESISTOR,CHIP 47 1/16W 1608
R1183	1-216-805-11	s	RESISTOR,CHIP 47 1/16W 1608
R1184	1-216-805-11	s	RESISTOR,CHIP 47 1/16W 1608
R1185	1-216-805-11	s	RESISTOR,CHIP 47 1/16W 1608

(SSP-23 BOARD (for DSR-1600/P))

Ref. No. or Q'ty	Part No.	SP	Description
R1186	1-216-805-11	s	RESISTOR,CHIP 47 1/16W 1608
R1187	1-216-805-11	s	RESISTOR,CHIP 47 1/16W 1608
R1188	1-216-805-11	s	RESISTOR,CHIP 47 1/16W 1608
R1189	1-216-805-11	s	RESISTOR,CHIP 47 1/16W 1608
R1190	1-216-805-11	s	RESISTOR,CHIP 47 1/16W 1608
R1191	1-216-805-11	s	RESISTOR,CHIP 47 1/16W 1608
R1192	1-216-805-11	s	RESISTOR,CHIP 47 1/16W 1608
R1193	1-216-805-11	s	RESISTOR,CHIP 47 1/16W 1608
R1194	1-216-805-11	s	RESISTOR,CHIP 47 1/16W 1608
R1195	1-216-805-11	s	RESISTOR,CHIP 47 1/16W 1608
R1196	1-216-805-11	s	RESISTOR,CHIP 47 1/16W 1608
R1197	1-216-805-11	s	RESISTOR,CHIP 47 1/16W 1608
R1198	1-216-805-11	s	RESISTOR,CHIP 47 1/16W 1608
R1199	1-216-805-11	s	RESISTOR,CHIP 47 1/16W 1608
R1200	1-216-805-11	s	RESISTOR,CHIP 47 1/16W 1608
R1201	1-216-801-11	s	RESISTOR,CHIP 22 1/16W (1608)
R1202	1-216-801-11	s	RESISTOR,CHIP 22 1/16W (1608)
R1203	1-216-801-11	s	RESISTOR,CHIP 22 1/16W (1608)
R1204	1-216-801-11	s	RESISTOR,CHIP 22 1/16W (1608)
R1205	1-216-801-11	s	RESISTOR,CHIP 22 1/16W (1608)
R1206	1-216-801-11	s	RESISTOR,CHIP 22 1/16W (1608)
R1207	1-216-801-11	s	RESISTOR,CHIP 22 1/16W (1608)
R1215	1-216-801-11	s	RESISTOR,CHIP 22 1/16W (1608)
R1216	1-216-801-11	s	RESISTOR,CHIP 22 1/16W (1608)
R1217	1-216-801-11	s	RESISTOR,CHIP 22 1/16W (1608)
R1218	1-216-801-11	s	RESISTOR,CHIP 22 1/16W (1608)
R1251	1-216-864-11	s	RESISTOR,CHIP 0 1/16W (1608)
R1252	1-216-864-11	s	RESISTOR,CHIP 0 1/16W (1608)
R1253	1-216-864-11	s	RESISTOR,CHIP 0 1/16W (1608)
R1254	1-216-809-11	s	RESISTOR,CHIP 100 1/16W 1608
R1255	1-216-809-11	s	RESISTOR,CHIP 100 1/16W 1608
R1256	1-216-809-11	s	RESISTOR,CHIP 100 1/16W 1608
R1257	1-216-845-11	s	RESISTOR,CHIP 100K 1/16W(1608)
R1258	1-216-845-11	s	RESISTOR,CHIP 100K 1/16W(1608)
R1259	1-216-864-11	s	RESISTOR,CHIP 0 1/16W (1608)
R1262	1-216-809-11	s	RESISTOR,CHIP 100 1/16W 1608
R1264	1-216-809-11	s	RESISTOR,CHIP 100 1/16W 1608
R1351	1-216-857-11	s	RESISTOR,CHIP 1M 1/16W(1608)
R1352	1-216-801-11	s	RESISTOR,CHIP 22 1/16W (1608)
R1353	1-216-801-11	s	RESISTOR,CHIP 22 1/16W (1608)
R1354	1-216-801-11	s	RESISTOR,CHIP 22 1/16W (1608)
R1355	1-216-801-11	s	RESISTOR,CHIP 22 1/16W (1608)
R1356	1-216-801-11	s	RESISTOR,CHIP 22 1/16W (1608)
R1357	1-216-801-11	s	RESISTOR,CHIP 22 1/16W (1608)
R1358	1-216-801-11	s	RESISTOR,CHIP 22 1/16W (1608)
R1359	1-216-801-11	s	RESISTOR,CHIP 22 1/16W (1608)
R1360	1-216-809-11	s	RESISTOR,CHIP 100 1/16W 1608
R1361	1-216-797-11	s	RESISTOR,CHIP 10 1/16W 1608
R1375	1-216-801-11	s	RESISTOR,CHIP 22 1/16W (1608)
R1376	1-216-801-11	s	RESISTOR,CHIP 22 1/16W (1608)
R1377	1-216-801-11	s	RESISTOR,CHIP 22 1/16W (1608)
R1378	1-216-801-11	s	RESISTOR,CHIP 22 1/16W (1608)
R1385	1-216-801-11	s	RESISTOR,CHIP 22 1/16W (1608)
R1386	1-216-801-11	s	RESISTOR,CHIP 22 1/16W (1608)
R1394	1-216-833-11	s	RESISTOR,CHIP 10K 1/16W (1608)
R1395	1-216-833-11	s	RESISTOR,CHIP 10K 1/16W (1608)
R1396	1-216-829-11	s	RESISTOR,CHIP 4.7K 1/16W(1608)
R1397	1-216-857-11	s	RESISTOR,CHIP 1M 1/16W(1608)
R1398	1-216-864-11	s	RESISTOR,CHIP 0 1/16W (1608)

(SSP-23 BOARD (for DSR-1600/P))

Ref. No. or Q'ty	Part No.	SP	Description
R1400	1-216-805-11	s	RESISTOR,CHIP 47 1/16W 1608
R1401	1-216-817-11	s	RESISTOR,CHIP 470 1/16W 1608
R1402	1-216-845-11	s	RESISTOR,CHIP 100K 1/16W(1608)
R1403	1-216-864-11	s	RESISTOR,CHIP 0 1/16W (1608)
R1404	1-216-845-11	s	RESISTOR,CHIP 100K 1/16W(1608)
R1405	1-216-864-11	s	RESISTOR,CHIP 0 1/16W (1608)
R1406	1-216-809-11	s	RESISTOR,CHIP 100 1/16W 1608
R1407	1-216-809-11	s	RESISTOR,CHIP 100 1/16W 1608
R1408	1-216-809-11	s	RESISTOR,CHIP 100 1/16W 1608
R1409	1-216-797-11	s	RESISTOR,CHIP 10 1/16W 1608
R1410	1-216-801-11	s	RESISTOR,CHIP 22 1/16W (1608)
R1411	1-216-801-11	s	RESISTOR,CHIP 22 1/16W (1608)
R1451	1-216-845-11	s	RESISTOR,CHIP 100K 1/16W(1608)
R1452	1-216-845-11	s	RESISTOR,CHIP 100K 1/16W(1608)
R1453	1-216-845-11	s	RESISTOR,CHIP 100K 1/16W(1608)
R1454	1-216-845-11	s	RESISTOR,CHIP 100K 1/16W(1608)
R1455	1-216-809-11	s	RESISTOR,CHIP 100 1/16W 1608
R1456	1-216-809-11	s	RESISTOR,CHIP 100 1/16W 1608
R1457	1-216-833-11	s	RESISTOR,CHIP 10K 1/16W (1608)
R1459	1-216-829-11	s	RESISTOR,CHIP 4.7K 1/16W(1608)
R1460	1-216-833-11	s	RESISTOR,CHIP 10K 1/16W (1608)
R1461	1-216-833-11	s	RESISTOR,CHIP 10K 1/16W (1608)
R1462	1-216-833-11	s	RESISTOR,CHIP 10K 1/16W (1608)
R1463	1-216-833-11	s	RESISTOR,CHIP 10K 1/16W (1608)
R1468	1-216-833-11	s	RESISTOR,CHIP 10K 1/16W (1608)
R1469	1-216-833-11	s	RESISTOR,CHIP 10K 1/16W (1608)
R1470	1-216-833-11	s	RESISTOR,CHIP 10K 1/16W (1608)
R1471	1-216-833-11	s	RESISTOR,CHIP 10K 1/16W (1608)
R1472	1-216-833-11	s	RESISTOR,CHIP 10K 1/16W (1608)
R1473	1-216-833-11	s	RESISTOR,CHIP 10K 1/16W (1608)
R1474	1-216-833-11	s	RESISTOR,CHIP 10K 1/16W (1608)
R1475	1-216-833-11	s	RESISTOR,CHIP 10K 1/16W (1608)
R1476	1-216-833-11	s	RESISTOR,CHIP 10K 1/16W (1608)
R1477	1-216-833-11	s	RESISTOR,CHIP 10K 1/16W (1608)
R1478	1-216-833-11	s	RESISTOR,CHIP 10K 1/16W (1608)
R1479	1-216-833-11	s	RESISTOR,CHIP 10K 1/16W (1608)
R1480	1-220-258-11	s	RESISTOR, CHIP 100 1/4W (3225)
R1564	1-216-821-11	s	RESISTOR,CHIP 1.0K 1/16W(1608)
R1565	1-216-821-11	s	RESISTOR,CHIP 1.0K 1/16W(1608)
R1566	1-216-829-11	s	RESISTOR,CHIP 4.7K 1/16W(1608)
R1567	1-216-801-11	s	RESISTOR,CHIP 22 1/16W (1608)
R1568	1-216-801-11	s	RESISTOR,CHIP 22 1/16W (1608)
R1569	1-216-801-11	s	RESISTOR,CHIP 22 1/16W (1608)
R1570	1-216-864-11	s	RESISTOR,CHIP 0 1/16W (1608)
R1571	1-216-864-11	s	RESISTOR,CHIP 0 1/16W (1608)
R1572	1-216-864-11	s	RESISTOR,CHIP 0 1/16W (1608)
R1573	1-216-801-11	s	RESISTOR,CHIP 22 1/16W (1608)
R1574	1-216-801-11	s	RESISTOR,CHIP 22 1/16W (1608)
R1575	1-216-801-11	s	RESISTOR,CHIP 22 1/16W (1608)
R1576	1-216-801-11	s	RESISTOR,CHIP 22 1/16W (1608)
R1577	1-216-801-11	s	RESISTOR,CHIP 22 1/16W (1608)
R1578	1-216-801-11	s	RESISTOR,CHIP 22 1/16W (1608)
R1579	1-216-801-11	s	RESISTOR,CHIP 22 1/16W (1608)
R1580	1-216-801-11	s	RESISTOR,CHIP 22 1/16W (1608)
R1582	1-216-864-11	s	RESISTOR,CHIP 0 1/16W (1608)
R1583	1-216-845-11	s	RESISTOR,CHIP 100K 1/16W(1608)
R1585	1-216-864-11	s	RESISTOR,CHIP 0 1/16W (1608)
R1586	1-216-864-11	s	RESISTOR,CHIP 0 1/16W (1608)
R1587	1-216-801-11	s	RESISTOR,CHIP 22 1/16W (1608)

(SSP-23 BOARD (for DSR-1600/P))

Ref. No. or Q'ty	Part No.	SP	Description
R1588	1-216-801-11	s	RESISTOR,CHIP 22 1/16W (1608)
R1602	1-216-821-11	s	RESISTOR,CHIP 1.0K 1/16W(1608)
R1603	1-218-904-11	s	RESISTOR,CHIP 240K 1/16W(1608)
R1604	1-218-904-11	s	RESISTOR,CHIP 240K 1/16W(1608)
R1605	1-216-837-11	s	RESISTOR,CHIP 22K 1/16W 1608
R1607	1-216-801-11	s	RESISTOR,CHIP 22 1/16W (1608)
R1608	1-216-801-11	s	RESISTOR,CHIP 22 1/16W (1608)
R1609	1-216-801-11	s	RESISTOR,CHIP 22 1/16W (1608)
R1610	1-216-801-11	s	RESISTOR,CHIP 22 1/16W (1608)
R1611	1-216-801-11	s	RESISTOR,CHIP 22 1/16W (1608)
R1612	1-216-801-11	s	RESISTOR,CHIP 22 1/16W (1608)
R1615	1-216-801-11	s	RESISTOR,CHIP 22 1/16W (1608)
R1616	1-216-801-11	s	RESISTOR,CHIP 22 1/16W (1608)
R1617	1-216-801-11	s	RESISTOR,CHIP 22 1/16W (1608)
R1618	1-216-864-11	s	RESISTOR,CHIP 0 1/16W (1608)
R1619	1-216-801-11	s	RESISTOR,CHIP 22 1/16W (1608)
R1620	1-216-801-11	s	RESISTOR,CHIP 22 1/16W (1608)
R1621	1-216-801-11	s	RESISTOR,CHIP 22 1/16W (1608)
R1624	1-216-833-11	s	RESISTOR,CHIP 10K 1/16W (1608)
R1625	1-216-833-11	s	RESISTOR,CHIP 10K 1/16W (1608)
R1626	1-216-833-11	s	RESISTOR,CHIP 10K 1/16W (1608)
R1632	1-216-864-11	s	RESISTOR,CHIP 0 1/16W (1608)
R1634	1-216-801-11	s	RESISTOR,CHIP 22 1/16W (1608)
R1651	1-216-801-11	s	RESISTOR,CHIP 22 1/16W (1608)
R1652	1-216-801-11	s	RESISTOR,CHIP 22 1/16W (1608)
R1653	1-216-801-11	s	RESISTOR,CHIP 22 1/16W (1608)
R1654	1-216-801-11	s	RESISTOR,CHIP 22 1/16W (1608)
R1655	1-216-801-11	s	RESISTOR,CHIP 22 1/16W (1608)
R1656	1-216-801-11	s	RESISTOR,CHIP 22 1/16W (1608)
R1659	1-216-801-11	s	RESISTOR,CHIP 22 1/16W (1608)
R1661	1-216-801-11	s	RESISTOR,CHIP 22 1/16W (1608)
R1662	1-216-833-11	s	RESISTOR,CHIP 10K 1/16W (1608)
R1663	1-216-864-11	s	RESISTOR,CHIP 0 1/16W (1608)
R1664	1-216-801-11	s	RESISTOR,CHIP 22 1/16W (1608)
R1665	1-216-801-11	s	RESISTOR,CHIP 22 1/16W (1608)
R1666	1-216-801-11	s	RESISTOR,CHIP 22 1/16W (1608)
R1667	1-216-801-11	s	RESISTOR,CHIP 22 1/16W (1608)
R1668	1-216-801-11	s	RESISTOR,CHIP 22 1/16W (1608)
R1669	1-216-801-11	s	RESISTOR,CHIP 22 1/16W (1608)
R1670	1-216-801-11	s	RESISTOR,CHIP 22 1/16W (1608)
R1671	1-216-845-11	s	RESISTOR,CHIP 100K 1/16W(1608)
R1672	1-216-845-11	s	RESISTOR,CHIP 100K 1/16W(1608)
R1673	1-216-845-11	s	RESISTOR,CHIP 100K 1/16W(1608)
R1674	1-216-864-11	s	RESISTOR,CHIP 0 1/16W (1608)
R1675	1-216-864-11	s	RESISTOR,CHIP 0 1/16W (1608)
R1676	1-216-864-11	s	RESISTOR,CHIP 0 1/16W (1608)
R1677	1-216-864-11	s	RESISTOR,CHIP 0 1/16W (1608)
R1678	1-216-845-11	s	RESISTOR,CHIP 100K 1/16W(1608)
R1679	1-216-801-11	s	RESISTOR,CHIP 22 1/16W (1608)
R1680	1-216-864-11	s	RESISTOR,CHIP 0 1/16W (1608)
R1681	1-216-864-11	s	RESISTOR,CHIP 0 1/16W (1608)
R1682	1-216-864-11	s	RESISTOR,CHIP 0 1/16W (1608)
R1683	1-216-833-11	s	RESISTOR,CHIP 10K 1/16W (1608)
R1684	1-216-833-11	s	RESISTOR,CHIP 10K 1/16W (1608)
R1685	1-216-801-11	s	RESISTOR,CHIP 22 1/16W (1608)
R1686	1-216-801-11	s	RESISTOR,CHIP 22 1/16W (1608)
R1687	1-216-801-11	s	RESISTOR,CHIP 22 1/16W (1608)
R1775	1-216-838-11	s	RESISTOR CHIP 27K 1/16W(1608)
R1776	1-216-839-11	s	RESISTOR,CHIP 33K 1/16W 1608

http://getMANUAL.com

(SSP-23 BOARD (for DSR-1600/P))

Ref. No. or Q'ty	Part No.	SP	Description
R1779	1-216-841-11	s	RESISTOR, CHIP 47K 1/16W 1608
R1781	1-216-829-11	s	RESISTOR,CHIP 4.7K 1/16W(1608)
R1786	1-216-841-11	s	RESISTOR, CHIP 47K 1/16W 1608
R1788	1-216-835-11	s	RESISTOR,CHIP 15K 1/16W
R1790	1-216-841-11	s	RESISTOR, CHIP 47K 1/16W 1608
R1792	1-216-841-11	s	RESISTOR, CHIP 47K 1/16W 1608
R1793	1-216-841-11	s	RESISTOR, CHIP 47K 1/16W 1608
R1796	1-216-801-11	s	RESISTOR,CHIP 22 1/16W (1608)
R1797	1-216-801-11	s	RESISTOR,CHIP 22 1/16W (1608)
R1798	1-216-801-11	s	RESISTOR,CHIP 22 1/16W (1608)
R1799	1-216-801-11	s	RESISTOR,CHIP 22 1/16W (1608)
R1800	1-216-801-11	s	RESISTOR,CHIP 22 1/16W (1608)
R1802	1-216-801-11	s	RESISTOR,CHIP 22 1/16W (1608)
R1803	1-216-801-11	s	RESISTOR,CHIP 22 1/16W (1608)
R1819	1-216-801-11	s	RESISTOR,CHIP 22 1/16W (1608)
R1820	1-216-801-11	s	RESISTOR,CHIP 22 1/16W (1608)
R1821	1-216-801-11	s	RESISTOR,CHIP 22 1/16W (1608)
R1822	1-216-801-11	s	RESISTOR,CHIP 22 1/16W (1608)
R1823	1-216-801-11	s	RESISTOR,CHIP 22 1/16W (1608)
R1825	1-216-801-11	s	RESISTOR,CHIP 22 1/16W (1608)
R1826	1-216-801-11	s	RESISTOR,CHIP 22 1/16W (1608)
R1832	1-216-801-11	s	RESISTOR,CHIP 22 1/16W (1608)
R1836	1-216-801-11	s	RESISTOR,CHIP 22 1/16W (1608)
R1837	1-216-801-11	s	RESISTOR,CHIP 22 1/16W (1608)
R1838	1-216-801-11	s	RESISTOR,CHIP 22 1/16W (1608)
R1839	1-216-801-11	s	RESISTOR,CHIP 22 1/16W (1608)
RB201	1-236-908-11	s	RESISTOR,NETWORK 10K (3216)
RB202	1-236-908-11	s	RESISTOR,NETWORK 10K (3216)
RB203	1-239-409-11	s	RESISTOR NETWORK 47 (1608)
RB204	1-239-409-11	s	RESISTOR NETWORK 47 (1608)
RB400	1-239-308-11	s	RESISTOR ARRAY,CHIP 47K
RB401	1-236-908-11	s	RESISTOR,NETWORK 10K (3216)
RB407	1-239-621-11	s	NETWORK RESISTOR 22 (1608)
RB500	1-236-906-11	s	RESISTOR, NETWORK 15K (1608)
RB501	1-236-907-11	s	RESISTOR BLOCK 100K (1608)
RB502	1-236-907-11	s	RESISTOR BLOCK 100K (1608)
RB503	1-239-308-11	s	RESISTOR ARRAY,CHIP 47K
RB504	1-239-308-11	s	RESISTOR ARRAY,CHIP 47K
RB505	1-239-621-11	s	NETWORK RESISTOR 22 (1608)
RB506	1-239-621-11	s	NETWORK RESISTOR 22 (1608)
RB507	1-239-621-11	s	NETWORK RESISTOR 22 (1608)
RB508	1-239-621-11	s	NETWORK RESISTOR 22 (1608)
RB509	1-239-308-11	s	RESISTOR ARRAY,CHIP 47K
RB510	1-239-621-11	s	NETWORK RESISTOR 22 (1608)
RB511	1-239-621-11	s	NETWORK RESISTOR 22 (1608)
RB512	1-239-621-11	s	NETWORK RESISTOR 22 (1608)
RB513	1-239-621-11	s	NETWORK RESISTOR 22 (1608)
RB514	1-239-621-11	s	NETWORK RESISTOR 22 (1608)
RB515	1-239-621-11	s	NETWORK RESISTOR 22 (1608)
RB516	1-239-621-11	s	NETWORK RESISTOR 22 (1608)
RB517	1-239-621-11	s	NETWORK RESISTOR 22 (1608)
RB518	1-239-621-11	s	NETWORK RESISTOR 22 (1608)
RB519	1-239-621-11	s	NETWORK RESISTOR 22 (1608)
RB520	1-239-621-11	s	NETWORK RESISTOR 22 (1608)
RB521	1-239-621-11	s	NETWORK RESISTOR 22 (1608)
RB522	1-239-621-11	s	NETWORK RESISTOR 22 (1608)
RB523	1-239-621-11	s	NETWORK RESISTOR 22 (1608)
RB528	1-239-621-11	s	NETWORK RESISTOR 22 (1608)

(SSP-23 BOARD (for DSR-1600/P))

Ref. No. or Q'ty	Part No.	SP	Description
RB529	1-239-621-11	s	NETWORK RESISTOR 22 (1608)
RB530	1-239-621-11	s	NETWORK RESISTOR 22 (1608)
RB531	1-239-621-11	s	NETWORK RESISTOR 22 (1608)
RB532	1-239-621-11	s	NETWORK RESISTOR 22 (1608)
RB533	1-239-621-11	s	NETWORK RESISTOR 22 (1608)
RB534	1-239-621-11	s	NETWORK RESISTOR 22 (1608)
RB535	1-239-621-11	s	NETWORK RESISTOR 22 (1608)
RB600	1-239-621-11	s	NETWORK RESISTOR 22 (1608)
RB601	1-239-621-11	s	NETWORK RESISTOR 22 (1608)
RB602	1-239-621-11	s	NETWORK RESISTOR 22 (1608)
RB603	1-239-308-11	s	RESISTOR ARRAY,CHIP 47K
S400	1-692-536-11	s	SWITCH DIP (8P)
S500	1-572-473-11	s	SWITCH, TACTIL
X200	1-579-996-21	s	VIBRATOR, CERAMIC
X400	1-781-073-21	s	OSCILLATOR, CRYSTAL
X500	1-767-559-11	s	VIBRATOR, CRYSTAL
X1351	1-767-449-11	s	VIBRATOR, CRYSTAL
X1651	1-795-007-11	s	OSCILLATOR, CRYSTAL

SSP-24/24A BOARD (for DSR-1800/P)

Ref. No. or Q'ty	Part No.	SP	Description
1pc	A-8326-498-A	o	MOUNTED CIRCUIT BOARD, SSP-24
1pc	⚠ 1-528-749-11	s	BATTERY,MOLD TYPE (LITHIUM)
16pcs	7-685-862-09	s	SCREW,+BVTP 2.6X6(EP-FE/ZNBK/C
1pc	7-685-646-79	s	SCREW +BVTP 3X8(EP-FE/ZNBK/CM2
2pcs	4-886-821-11	s	SCREW,M3X6 CASE (SILVER)
2pcs	7-685-871-01	s	SCREW BVTT 3X6(EP-FE/ZN/CM2)
C101	1-164-156-11	s	CAPACITOR,CERAMIC 0.1MF/25V F
C102	1-164-156-11	s	CAPACITOR,CERAMIC 0.1MF/25V F
C103	1-126-394-11	s	CAPACITOR,ELECT 10MF/16V(CHIP)
C104	1-126-395-11	s	CAPACITOR,ELECT 22MF/16V(CHIP)
C105	1-164-156-11	s	CAPACITOR,CERAMIC 0.1MF/25V F
C106	1-126-396-11	s	CAPACITOR,ELECT 47MF/16V(CHIP)
C107	1-126-395-11	s	CAPACITOR,ELECT 22MF/16V(CHIP)
C108	1-126-395-11	s	CAPACITOR,ELECT 22MF/16V(CHIP)
C110	1-164-156-11	s	CAPACITOR,CERAMIC 0.1MF/25V F
C111	1-162-970-11	s	CAPACITOR CERAMIC 0.01MF/25V B
C112	1-164-156-11	s	CAPACITOR,CERAMIC 0.1MF/25V F
C113	1-164-156-11	s	CAPACITOR,CERAMIC 0.1MF/25V F
C114	1-126-396-11	s	CAPACITOR,ELECT 47MF/16V(CHIP)
C115	1-164-156-11	s	CAPACITOR,CERAMIC 0.1MF/25V F
C200	1-126-396-11	s	CAPACITOR,ELECT 47MF/16V(CHIP)
C201	1-164-227-11	s	CAPACITOR,CERAMIC 0.022MF/25V
C202	1-165-176-11	s	CAPACITOR,CERAMIC 47000PF/16V
C203	1-164-156-11	s	CAPACITOR,CERAMIC 0.1MF/25V F
C204	1-164-156-11	s	CAPACITOR,CERAMIC 0.1MF/25V F
C205	1-162-964-11	s	CAPACITOR,CERAMIC 1000PF/50V B
C206	1-164-227-11	s	CAPACITOR,CERAMIC 0.022MF/25V
C207	1-164-227-11	s	CAPACITOR,CERAMIC 0.022MF/25V
C208	1-162-917-11	s	CAPACITOR,CERAMIC 15PF/50V CH
C209	1-162-917-11	s	CAPACITOR,CERAMIC 15PF/50V CH
C210	1-164-156-11	s	CAPACITOR,CERAMIC 0.1MF/25V F
C211	1-164-156-11	s	CAPACITOR,CERAMIC 0.1MF/25V F
C212	1-164-156-11	s	CAPACITOR,CERAMIC 0.1MF/25V F
C213	1-164-156-11	s	CAPACITOR,CERAMIC 0.1MF/25V F
C214	1-164-156-11	s	CAPACITOR,CERAMIC 0.1MF/25V F
C215	1-164-156-11	s	CAPACITOR,CERAMIC 0.1MF/25V F
C217	1-164-156-11	s	CAPACITOR,CERAMIC 0.1MF/25V F
C218	1-164-156-11	s	CAPACITOR,CERAMIC 0.1MF/25V F
C219	1-164-156-11	s	CAPACITOR,CERAMIC 0.1MF/25V F
C220	1-164-156-11	s	CAPACITOR,CERAMIC 0.1MF/25V F
C221	1-164-156-11	s	CAPACITOR,CERAMIC 0.1MF/25V F
C222	1-164-156-11	s	CAPACITOR,CERAMIC 0.1MF/25V F
C223	1-164-156-11	s	CAPACITOR,CERAMIC 0.1MF/25V F
C224	1-164-156-11	s	CAPACITOR,CERAMIC 0.1MF/25V F
C225	1-164-156-11	s	CAPACITOR,CERAMIC 0.1MF/25V F
C226	1-162-966-11	s	CAPACITOR,CERAMIC 2200PF/50V B
C300	1-162-970-11	s	CAPACITOR CERAMIC 0.01MF/25V B
C301	1-126-394-11	s	CAPACITOR,ELECT 10MF/16V(CHIP)
C302	1-162-968-11	s	CAPACITOR,CERAMIC 4700PF/50V B
C303	1-162-927-11	s	CAPACITOR,CERAMIC 100PF/50V CH
C304	1-162-927-11	s	CAPACITOR,CERAMIC 100PF/50V CH
C305	1-164-156-11	s	CAPACITOR,CERAMIC 0.1MF/25V F
C306	1-162-970-11	s	CAPACITOR CERAMIC 0.01MF/25V B
C307	1-162-964-11	s	CAPACITOR,CERAMIC 1000PF/50V B
C308	1-164-315-11	s	CAPACITOR,CERAMIC 470PF/50V CH
C309	1-162-922-11	s	CAPACITOR,CERAMIC 39PF/50V CH
C310	1-165-176-11	s	CAPACITOR,CERAMIC 47000PF/16V
C311	1-162-968-11	s	CAPACITOR,CERAMIC 4700PF/50V B

(SSP-24/24A BOARD (for DSR-1800/P))

Ref. No. or Q'ty	Part No.	SP	Description
C312	1-162-922-11	s	CAPACITOR,CERAMIC 39PF/50V CH
C313	1-162-922-11	s	CAPACITOR,CERAMIC 39PF/50V CH
C314	1-162-968-11	s	CAPACITOR,CERAMIC 4700PF/50V B
C315	1-162-968-11	s	CAPACITOR,CERAMIC 4700PF/50V B
C316	1-162-964-11	s	CAPACITOR,CERAMIC 1000PF/50V B
C317	1-165-176-11	s	CAPACITOR,CERAMIC 47000PF/16V
C318	1-164-315-11	s	CAPACITOR,CERAMIC 470PF/50V CH
C319	1-162-922-11	s	CAPACITOR,CERAMIC 39PF/50V CH
C320	1-165-176-11	s	CAPACITOR,CERAMIC 47000PF/16V
C321	1-162-922-11	s	CAPACITOR,CERAMIC 39PF/50V CH
C322	1-162-922-11	s	CAPACITOR,CERAMIC 39PF/50V CH
C323	1-162-968-11	s	CAPACITOR,CERAMIC 4700PF/50V B
C324	1-162-968-11	s	CAPACITOR,CERAMIC 4700PF/50V B
C325	1-164-156-11	s	CAPACITOR,CERAMIC 0.1MF/25V F
C326	1-162-970-11	s	CAPACITOR CERAMIC 0.01MF/25V B
C327	1-164-156-11	s	CAPACITOR,CERAMIC 0.1MF/25V F
C328	1-164-156-11	s	CAPACITOR,CERAMIC 0.1MF/25V F
C329	1-164-156-11	s	CAPACITOR,CERAMIC 0.1MF/25V F
C330	1-164-156-11	s	CAPACITOR,CERAMIC 0.1MF/25V F
C331	1-164-156-11	s	CAPACITOR,CERAMIC 0.1MF/25V F
C332	1-164-156-11	s	CAPACITOR,CERAMIC 0.1MF/25V F
C333	1-164-156-11	s	CAPACITOR,CERAMIC 0.1MF/25V F
C334	1-164-156-11	s	CAPACITOR,CERAMIC 0.1MF/25V F
C335	1-164-156-11	s	CAPACITOR,CERAMIC 0.1MF/25V F
C336	1-164-156-11	s	CAPACITOR,CERAMIC 0.1MF/25V F
C337	1-164-156-11	s	CAPACITOR,CERAMIC 0.1MF/25V F
C338	1-164-156-11	s	CAPACITOR,CERAMIC 0.1MF/25V F
C339	1-164-156-11	s	CAPACITOR,CERAMIC 0.1MF/25V F
C340	1-164-156-11	s	CAPACITOR,CERAMIC 0.1MF/25V F
C341	1-164-156-11	s	CAPACITOR,CERAMIC 0.1MF/25V F
C342	1-164-156-11	s	CAPACITOR,CERAMIC 0.1MF/25V F
C343	1-164-156-11	s	CAPACITOR,CERAMIC 0.1MF/25V F
C344	1-164-156-11	s	CAPACITOR,CERAMIC 0.1MF/25V F
C345	1-164-156-11	s	CAPACITOR,CERAMIC 0.1MF/25V F
C346	1-164-156-11	s	CAPACITOR,CERAMIC 0.1MF/25V F
C347	1-164-156-11	s	CAPACITOR,CERAMIC 0.1MF/25V F
C400	1-164-156-11	s	CAPACITOR,CERAMIC 0.1MF/25V F
C401	1-128-393-11	s	CAPACITOR,ELECT 100MF/10V
C402	1-128-393-11	s	CAPACITOR,ELECT 100MF/10V
C403	1-164-156-11	s	CAPACITOR,CERAMIC 0.1MF/25V F
C404	1-128-394-11	s	CAPACITOR,ELECT 220MF/10V
C405	1-164-156-11	s	CAPACITOR,CERAMIC 0.1MF/25V F
C406	1-164-156-11	s	CAPACITOR,CERAMIC 0.1MF/25V F
C407	1-162-917-11	s	CAPACITOR,CERAMIC 15PF/50V CH
C408	1-162-917-11	s	CAPACITOR,CERAMIC 15PF/50V CH
C409	1-164-156-11	s	CAPACITOR,CERAMIC 0.1MF/25V F
C410	1-164-156-11	s	CAPACITOR,CERAMIC 0.1MF/25V F
C411	1-164-156-11	s	CAPACITOR,CERAMIC 0.1MF/25V F
C412	1-164-156-11	s	CAPACITOR,CERAMIC 0.1MF/25V F
C413	1-164-156-11	s	CAPACITOR,CERAMIC 0.1MF/25V F
C414	1-164-156-11	s	CAPACITOR,CERAMIC 0.1MF/25V F
C415	1-164-156-11	s	CAPACITOR,CERAMIC 0.1MF/25V F
C416	1-164-156-11	s	CAPACITOR,CERAMIC 0.1MF/25V F
C417	1-164-156-11	s	CAPACITOR,CERAMIC 0.1MF/25V F
C418	1-164-156-11	s	CAPACITOR,CERAMIC 0.1MF/25V F
C419	1-164-156-11	s	CAPACITOR,CERAMIC 0.1MF/25V F
C420	1-164-156-11	s	CAPACITOR,CERAMIC 0.1MF/25V F
C421	1-164-156-11	s	CAPACITOR,CERAMIC 0.1MF/25V F
C422	1-164-156-11	s	CAPACITOR,CERAMIC 0.1MF/25V F

(SSP-24/24A BOARD (for DSR-1800/P))

Ref. No. or Q'ty	Part No.	SP	Description
C423	1-164-156-11	s	CAPACITOR,CERAMIC 0.1MF/25V F
C424	1-164-156-11	s	CAPACITOR,CERAMIC 0.1MF/25V F
C425	1-164-156-11	s	CAPACITOR,CERAMIC 0.1MF/25V F
C426	1-164-156-11	s	CAPACITOR,CERAMIC 0.1MF/25V F
C427	1-164-156-11	s	CAPACITOR,CERAMIC 0.1MF/25V F
C428	1-164-156-11	s	CAPACITOR,CERAMIC 0.1MF/25V F
C429	1-164-156-11	s	CAPACITOR,CERAMIC 0.1MF/25V F
C430	1-164-156-11	s	CAPACITOR,CERAMIC 0.1MF/25V F
C431	1-164-156-11	s	CAPACITOR,CERAMIC 0.1MF/25V F
C432	1-164-156-11	s	CAPACITOR,CERAMIC 0.1MF/25V F
C433	1-164-156-11	s	CAPACITOR,CERAMIC 0.1MF/25V F
C434	1-164-156-11	s	CAPACITOR,CERAMIC 0.1MF/25V F
C435	1-164-156-11	s	CAPACITOR,CERAMIC 0.1MF/25V F
C436	1-164-156-11	s	CAPACITOR,CERAMIC 0.1MF/25V F
C437	1-164-156-11	s	CAPACITOR,CERAMIC 0.1MF/25V F
C438	1-164-156-11	s	CAPACITOR,CERAMIC 0.1MF/25V F
C439	1-164-156-11	s	CAPACITOR,CERAMIC 0.1MF/25V F
C441	1-164-156-11	s	CAPACITOR,CERAMIC 0.1MF/25V F
C442	1-162-995-11	s	CAPACITOR,CERAMIC 0.022MF/50V
C443	1-162-995-11	s	CAPACITOR,CERAMIC 0.022MF/50V
C500	1-164-156-11	s	CAPACITOR,CERAMIC 0.1MF/25V F
C501	1-164-156-11	s	CAPACITOR,CERAMIC 0.1MF/25V F
C502	1-126-396-11	s	CAPACITOR,ELECT 47MF/16V(CHIP)
C503	1-164-156-11	s	CAPACITOR,CERAMIC 0.1MF/25V F
C504	1-164-156-11	s	CAPACITOR,CERAMIC 0.1MF/25V F
C505	1-164-156-11	s	CAPACITOR,CERAMIC 0.1MF/25V F
C506	1-162-917-11	s	CAPACITOR,CERAMIC 15PF/50V CH
C507	1-162-917-11	s	CAPACITOR,CERAMIC 15PF/50V CH
C508	1-164-156-11	s	CAPACITOR,CERAMIC 0.1MF/25V F
C509	1-164-156-11	s	CAPACITOR,CERAMIC 0.1MF/25V F
C510	1-135-212-21	s	CAPACITOR TANTALUM 2.2MF/35V
C511	1-164-156-11	s	CAPACITOR,CERAMIC 0.1MF/25V F
C512	1-164-156-11	s	CAPACITOR,CERAMIC 0.1MF/25V F
C513	1-164-156-11	s	CAPACITOR,CERAMIC 0.1MF/25V F
C514	1-164-156-11	s	CAPACITOR,CERAMIC 0.1MF/25V F
C515	1-164-156-11	s	CAPACITOR,CERAMIC 0.1MF/25V F
C516	1-164-156-11	s	CAPACITOR,CERAMIC 0.1MF/25V F
C517	1-164-156-11	s	CAPACITOR,CERAMIC 0.1MF/25V F
C518	1-164-156-11	s	CAPACITOR,CERAMIC 0.1MF/25V F
C519	1-164-156-11	s	CAPACITOR,CERAMIC 0.1MF/25V F
C520	1-164-156-11	s	CAPACITOR,CERAMIC 0.1MF/25V F
C521	1-164-156-11	s	CAPACITOR,CERAMIC 0.1MF/25V F
C522	1-164-156-11	s	CAPACITOR,CERAMIC 0.1MF/25V F
C523	1-164-156-11	s	CAPACITOR,CERAMIC 0.1MF/25V F
C600	1-164-156-11	s	CAPACITOR,CERAMIC 0.1MF/25V F
C601	1-164-156-11	s	CAPACITOR,CERAMIC 0.1MF/25V F
C602	1-164-156-11	s	CAPACITOR,CERAMIC 0.1MF/25V F
C603	1-164-156-11	s	CAPACITOR,CERAMIC 0.1MF/25V F
C604	1-126-405-11	s	CAPACITOR,ELECT 10MF/50V(CHIP
C605	1-126-405-11	s	CAPACITOR,ELECT 10MF/50V(CHIP
C606	1-164-156-11	s	CAPACITOR,CERAMIC 0.1MF/25V F
C607	1-162-964-11	s	CAPACITOR,CERAMIC 1000PF/50V B
C608	1-162-995-11	s	CAPACITOR,CERAMIC 0.022MF/50V
C609	1-162-970-11	s	CAPACITOR CERAMIC 0.01MF/25V B
C610	1-162-927-11	s	CAPACITOR,CERAMIC 100PF/50V CH
C611	1-164-156-11	s	CAPACITOR,CERAMIC 0.1MF/25V F
C612	1-164-156-11	s	CAPACITOR,CERAMIC 0.1MF/25V F
C613	1-164-156-11	s	CAPACITOR,CERAMIC 0.1MF/25V F
C614	1-164-156-11	s	CAPACITOR,CERAMIC 0.1MF/25V F

(SSP-24/24A BOARD (for DSR-1800/P))

Ref. No. or Q'ty	Part No.	SP	Description
C615	1-128-395-11	s	CAPACITOR, ELECT 330MF/10V CHI
C1001	1-164-227-11	s	CAPACITOR,CERAMIC 0.022MF/25V
C1002	1-164-227-11	s	CAPACITOR,CERAMIC 0.022MF/25V
C1003	1-128-416-11	s	CAPACITOR ELECT 100MF/16V(105C
C1004	1-128-416-11	s	CAPACITOR ELECT 100MF/16V(105C
C1005	1-128-416-11	s	CAPACITOR ELECT 100MF/16V(105C
C1006	1-128-416-11	s	CAPACITOR ELECT 100MF/16V(105C
C1031	1-128-416-11	s	CAPACITOR ELECT 100MF/16V(105C
C1101	1-164-315-11	s	CAPACITOR,CERAMIC 470PF/50V CH
C1102	1-164-315-11	s	CAPACITOR,CERAMIC 470PF/50V CH
C1104	1-164-315-11	s	CAPACITOR,CERAMIC 470PF/50V CH
C1105	1-164-315-11	s	CAPACITOR,CERAMIC 470PF/50V CH
C1106	1-126-405-11	s	CAPACITOR,ELECT 10MF/50V(CHIP
C1107	1-126-405-11	s	CAPACITOR,ELECT 10MF/50V(CHIP
C1108	1-162-923-11	s	CAPACITOR,CERAMIC 47PF/50V CH
C1109	1-162-923-11	s	CAPACITOR,CERAMIC 47PF/50V CH
C1151	1-126-395-11	s	CAPACITOR,ELECT 22MF/16V(CHIP)
C1152	1-126-395-11	s	CAPACITOR,ELECT 22MF/16V(CHIP)
C1153	1-162-923-11	s	CAPACITOR,CERAMIC 47PF/50V CH
C1154	1-162-923-11	s	CAPACITOR,CERAMIC 47PF/50V CH
C1155	1-162-927-11	s	CAPACITOR,CERAMIC 100PF/50V CH
C1156	1-162-923-11	s	CAPACITOR,CERAMIC 47PF/50V CH
C1157	1-164-156-11	s	CAPACITOR,CERAMIC 0.1MF/25V F
C1158	1-164-156-11	s	CAPACITOR,CERAMIC 0.1MF/25V F
C1159	1-104-851-11	s	CAPACITOR,TANTALUM 10MF/10V
C1160	1-126-394-11	s	CAPACITOR,ELECT 10MF/16V(CHIP)
C1161	1-126-394-11	s	CAPACITOR,ELECT 10MF/16V(CHIP)
C1162	1-104-851-11	s	CAPACITOR,TANTALUM 10MF/10V
C1163	1-164-156-11	s	CAPACITOR,CERAMIC 0.1MF/25V F
C1164	1-162-966-11	s	CAPACITOR,CERAMIC 2200PF/50V B
C1165	1-104-851-11	s	CAPACITOR,TANTALUM 10MF/10V
C1166	1-164-156-11	s	CAPACITOR,CERAMIC 0.1MF/25V F
C1167	1-162-965-11	s	CAPACITOR,CERAMIC 1500PF/50V B
C1169	1-162-966-11	s	CAPACITOR,CERAMIC 2200PF/50V B
C1170	1-164-156-11	s	CAPACITOR,CERAMIC 0.1MF/25V F
C1171	1-164-156-11	s	CAPACITOR,CERAMIC 0.1MF/25V F
C1172	1-164-156-11	s	CAPACITOR,CERAMIC 0.1MF/25V F
C1173	1-104-851-11	s	CAPACITOR,TANTALUM 10MF/10V
C1174	1-164-315-11	s	CAPACITOR,CERAMIC 470PF/50V CH
C1175	1-164-227-11	s	CAPACITOR,CERAMIC 0.022MF/25V
C1176	1-164-227-11	s	CAPACITOR,CERAMIC 0.022MF/25V
C1201	1-164-315-11	s	CAPACITOR,CERAMIC 470PF/50V CH
C1202	1-164-315-11	s	CAPACITOR,CERAMIC 470PF/50V CH
C1204	1-164-315-11	s	CAPACITOR,CERAMIC 470PF/50V CH
C1205	1-164-315-11	s	CAPACITOR,CERAMIC 470PF/50V CH
C1206	1-126-405-11	s	CAPACITOR,ELECT 10MF/50V(CHIP
C1207	1-126-405-11	s	CAPACITOR,ELECT 10MF/50V(CHIP
C1208	1-162-923-11	s	CAPACITOR,CERAMIC 47PF/50V CH
C1209	1-162-923-11	s	CAPACITOR,CERAMIC 47PF/50V CH
C1251	1-126-395-11	s	CAPACITOR,ELECT 22MF/16V(CHIP)
C1252	1-126-395-11	s	CAPACITOR,ELECT 22MF/16V(CHIP)
C1253	1-162-923-11	s	CAPACITOR,CERAMIC 47PF/50V CH
C1254	1-162-923-11	s	CAPACITOR,CERAMIC 47PF/50V CH
C1255	1-162-927-11	s	CAPACITOR,CERAMIC 100PF/50V CH
C1256	1-162-923-11	s	CAPACITOR,CERAMIC 47PF/50V CH
C1257	1-164-156-11	s	CAPACITOR,CERAMIC 0.1MF/25V F
C1258	1-164-156-11	s	CAPACITOR,CERAMIC 0.1MF/25V F
C1259	1-104-851-11	s	CAPACITOR,TANTALUM 10MF/10V
C1260	1-126-394-11	s	CAPACITOR,ELECT 10MF/16V(CHIP)

(SSP-24/24A BOARD (for DSR-1800/P))

Ref. No. or Q'ty	Part No.	SP	Description
C1261	1-126-394-11	s	CAPACITOR,ELECT 10MF/16V(CHIP)
C1267	1-162-965-11	s	CAPACITOR,CERAMIC 1500PF/50V B
C1301	1-164-315-11	s	CAPACITOR,CERAMIC 470PF/50V CH
C1302	1-164-315-11	s	CAPACITOR,CERAMIC 470PF/50V CH
C1303	1-164-156-11	s	CAPACITOR,CERAMIC 0.1MF/25V F
C1304	1-164-315-11	s	CAPACITOR,CERAMIC 470PF/50V CH
C1305	1-164-315-11	s	CAPACITOR,CERAMIC 470PF/50V CH
C1306	1-126-405-11	s	CAPACITOR,ELECT 10MF/50V(CHIP
C1307	1-126-405-11	s	CAPACITOR,ELECT 10MF/50V(CHIP
C1308	1-162-923-11	s	CAPACITOR,CERAMIC 47PF/50V CH
C1309	1-162-923-11	s	CAPACITOR,CERAMIC 47PF/50V CH
C1351	1-126-395-11	s	CAPACITOR,ELECT 22MF/16V(CHIP)
C1352	1-126-395-11	s	CAPACITOR,ELECT 22MF/16V(CHIP)
C1353	1-162-923-11	s	CAPACITOR,CERAMIC 47PF/50V CH
C1354	1-162-923-11	s	CAPACITOR,CERAMIC 47PF/50V CH
C1355	1-162-927-11	s	CAPACITOR,CERAMIC 100PF/50V CH
C1356	1-162-923-11	s	CAPACITOR,CERAMIC 47PF/50V CH
C1357	1-164-156-11	s	CAPACITOR,CERAMIC 0.1MF/25V F
C1358	1-164-156-11	s	CAPACITOR,CERAMIC 0.1MF/25V F
C1359	1-104-851-11	s	CAPACITOR,TANTALUM 10MF/10V
C1360	1-126-394-11	s	CAPACITOR,ELECT 10MF/16V(CHIP)
C1361	1-126-394-11	s	CAPACITOR,ELECT 10MF/16V(CHIP)
C1362	1-104-851-11	s	CAPACITOR,TANTALUM 10MF/10V
C1363	1-164-156-11	s	CAPACITOR,CERAMIC 0.1MF/25V F
C1364	1-162-966-11	s	CAPACITOR,CERAMIC 2200PF/50V B
C1365	1-104-851-11	s	CAPACITOR,TANTALUM 10MF/10V
C1366	1-164-156-11	s	CAPACITOR,CERAMIC 0.1MF/25V F
C1367	1-162-965-11	s	CAPACITOR,CERAMIC 1500PF/50V B
C1369	1-162-966-11	s	CAPACITOR,CERAMIC 2200PF/50V B
C1370	1-164-156-11	s	CAPACITOR,CERAMIC 0.1MF/25V F
C1371	1-164-156-11	s	CAPACITOR,CERAMIC 0.1MF/25V F
C1372	1-164-156-11	s	CAPACITOR,CERAMIC 0.1MF/25V F
C1373	1-104-851-11	s	CAPACITOR,TANTALUM 10MF/10V
C1401	1-164-315-11	s	CAPACITOR,CERAMIC 470PF/50V CH
C1402	1-164-315-11	s	CAPACITOR,CERAMIC 470PF/50V CH
C1404	1-164-315-11	s	CAPACITOR,CERAMIC 470PF/50V CH
C1405	1-164-315-11	s	CAPACITOR,CERAMIC 470PF/50V CH
C1406	1-126-405-11	s	CAPACITOR,ELECT 10MF/50V(CHIP
C1407	1-126-405-11	s	CAPACITOR,ELECT 10MF/50V(CHIP
C1408	1-162-923-11	s	CAPACITOR,CERAMIC 47PF/50V CH
C1409	1-162-923-11	s	CAPACITOR,CERAMIC 47PF/50V CH
C1451	1-126-395-11	s	CAPACITOR,ELECT 22MF/16V(CHIP)
C1452	1-126-395-11	s	CAPACITOR,ELECT 22MF/16V(CHIP)
C1453	1-162-923-11	s	CAPACITOR,CERAMIC 47PF/50V CH
C1454	1-162-923-11	s	CAPACITOR,CERAMIC 47PF/50V CH
C1455	1-162-927-11	s	CAPACITOR,CERAMIC 100PF/50V CH
C1456	1-162-923-11	s	CAPACITOR,CERAMIC 47PF/50V CH
C1457	1-164-156-11	s	CAPACITOR,CERAMIC 0.1MF/25V F
C1458	1-164-156-11	s	CAPACITOR,CERAMIC 0.1MF/25V F
C1459	1-104-851-11	s	CAPACITOR,TANTALUM 10MF/10V
C1460	1-126-394-11	s	CAPACITOR,ELECT 10MF/16V(CHIP)
C1461	1-126-394-11	s	CAPACITOR,ELECT 10MF/16V(CHIP)
C1467	1-162-965-11	s	CAPACITOR,CERAMIC 1500PF/50V B
C1501	1-162-923-11	s	CAPACITOR,CERAMIC 47PF/50V CH
C1502	1-128-416-11	s	CAPACITOR ELECT 100MF/16V(105C
C1504	1-126-395-11	s	CAPACITOR,ELECT 22MF/16V(CHIP)
C1505	1-128-416-11	s	CAPACITOR ELECT 100MF/16V(105C
C1506	1-104-851-11	s	CAPACITOR,TANTALUM 10MF/10V
C1507	1-164-156-11	s	CAPACITOR,CERAMIC 0.1MF/25V F

(SSP-24/24A BOARD (for DSR-1800/P))

Ref. No. or Q'ty	Part No.	SP	Description
C1508	1-164-156-11	s	CAPACITOR,CERAMIC 0.1MF/25V F
C1509	1-104-851-11	s	CAPACITOR,TANTALUM 10MF/10V
C1510	1-164-156-11	s	CAPACITOR,CERAMIC 0.1MF/25V F
C1511	1-126-394-11	s	CAPACITOR,ELECT 10MF/16V(CHIP)
C1512	1-126-394-11	s	CAPACITOR,ELECT 10MF/16V(CHIP)
C1513	1-126-394-11	s	CAPACITOR,ELECT 10MF/16V(CHIP)
C1514	1-126-394-11	s	CAPACITOR,ELECT 10MF/16V(CHIP)
C1515	1-162-927-11	s	CAPACITOR,CERAMIC 100PF/50V CH
C1516	1-162-927-11	s	CAPACITOR,CERAMIC 100PF/50V CH
C1517	1-162-927-11	s	CAPACITOR,CERAMIC 100PF/50V CH
C1518	1-162-927-11	s	CAPACITOR,CERAMIC 100PF/50V CH
C1519	1-164-227-11	s	CAPACITOR,CERAMIC 0.022MF/25V
C1520	1-164-227-11	s	CAPACITOR,CERAMIC 0.022MF/25V
C1521	1-165-176-11	s	CAPACITOR,CERAMIC 47000PF/16V
C1601	1-164-227-11	s	CAPACITOR,CERAMIC 0.022MF/25V
C1602	1-164-227-11	s	CAPACITOR,CERAMIC 0.022MF/25V
C1603	1-126-394-11	s	CAPACITOR,ELECT 10MF/16V(CHIP)
C1604	1-126-394-11	s	CAPACITOR,ELECT 10MF/16V(CHIP)
C1605	1-104-852-11	s	CAPACITOR,TANTALUM 22MF/10V
C1606	1-164-227-11	s	CAPACITOR,CERAMIC 0.022MF/25V
C1607	1-164-227-11	s	CAPACITOR,CERAMIC 0.022MF/25V
C1608	1-164-227-11	s	CAPACITOR,CERAMIC 0.022MF/25V
C1609	1-164-227-11	s	CAPACITOR,CERAMIC 0.022MF/25V
C1610	1-164-156-11	s	CAPACITOR,CERAMIC 0.1MF/25V F
C1611	1-164-156-11	s	CAPACITOR,CERAMIC 0.1MF/25V F
C1612	1-162-970-11	s	CAPACITOR CERAMIC 0.01MF/25V B
C1613	1-126-395-11	s	CAPACITOR,ELECT 22MF/16V(CHIP)
C1614	1-126-395-11	s	CAPACITOR,ELECT 22MF/16V(CHIP)
C1615	1-104-852-11	s	CAPACITOR,TANTALUM 22MF/10V
C1616	1-128-416-11	s	CAPACITOR ELECT 100MF/16V(105C
C1617	1-128-416-11	s	CAPACITOR ELECT 100MF/16V(105C
C1618	1-128-416-11	s	CAPACITOR ELECT 100MF/16V(105C
C2101	1-104-851-11	s	CAPACITOR,TANTALUM 10MF/10V
C2102	1-164-156-11	s	CAPACITOR,CERAMIC 0.1MF/25V F
C2103	1-164-156-11	s	CAPACITOR,CERAMIC 0.1MF/25V F
C2104	1-104-851-11	s	CAPACITOR,TANTALUM 10MF/10V
C2105	1-164-156-11	s	CAPACITOR,CERAMIC 0.1MF/25V F
C2106	1-126-394-11	s	CAPACITOR,ELECT 10MF/16V(CHIP)
C2107	1-126-394-11	s	CAPACITOR,ELECT 10MF/16V(CHIP)
C2108	1-162-927-11	s	CAPACITOR,CERAMIC 100PF/50V CH
C2109	1-162-927-11	s	CAPACITOR,CERAMIC 100PF/50V CH
C2110	1-164-227-11	s	CAPACITOR,CERAMIC 0.022MF/25V
C2111	1-164-227-11	s	CAPACITOR,CERAMIC 0.022MF/25V
C2112	1-126-395-11	s	CAPACITOR,ELECT 22MF/16V(CHIP)
C2113	1-162-927-11	s	CAPACITOR,CERAMIC 100PF/50V CH
C2114	1-164-156-11	s	CAPACITOR,CERAMIC 0.1MF/25V F
C2115	1-164-156-11	s	CAPACITOR,CERAMIC 0.1MF/25V F
C2116	1-164-227-11	s	CAPACITOR,CERAMIC 0.022MF/25V
C2151	1-164-156-11	s	CAPACITOR,CERAMIC 0.1MF/25V F
C2152	1-164-156-11	s	CAPACITOR,CERAMIC 0.1MF/25V F
C2153	1-162-927-11	s	CAPACITOR,CERAMIC 100PF/50V CH
C2154	1-126-395-11	s	CAPACITOR,ELECT 22MF/16V(CHIP)
C2155	1-162-923-11	s	CAPACITOR,CERAMIC 47PF/50V CH
C2156	1-162-923-11	s	CAPACITOR,CERAMIC 47PF/50V CH
C2157	1-162-927-11	s	CAPACITOR,CERAMIC 100PF/50V CH
C2158	1-128-398-11	s	CAP, ELECT 220MF/16V (CHIP)
C2159	1-128-398-11	s	CAP, ELECT 220MF/16V (CHIP)
C2206	1-126-394-11	s	CAPACITOR,ELECT 10MF/16V(CHIP)
C2207	1-126-394-11	s	CAPACITOR,ELECT 10MF/16V(CHIP)

(SSP-24/24A BOARD (for DSR-1800/P))

Ref. No. or Q'ty	Part No.	SP	Description
C2208	1-162-927-11	s	CAPACITOR,CERAMIC 100PF/50V CH
C2209	1-162-927-11	s	CAPACITOR,CERAMIC 100PF/50V CH
C2210	1-164-227-11	s	CAPACITOR,CERAMIC 0.022MF/25V
C2211	1-164-227-11	s	CAPACITOR,CERAMIC 0.022MF/25V
C2212	1-126-395-11	s	CAPACITOR,ELECT 22MF/16V(CHIP)
C2213	1-162-927-11	s	CAPACITOR,CERAMIC 100PF/50V CH
C2214	1-164-156-11	s	CAPACITOR,CERAMIC 0.1MF/25V F
C2215	1-164-156-11	s	CAPACITOR,CERAMIC 0.1MF/25V F
C2251	1-164-156-11	s	CAPACITOR,CERAMIC 0.1MF/25V F
C2252	1-164-156-11	s	CAPACITOR,CERAMIC 0.1MF/25V F
C2253	1-162-927-11	s	CAPACITOR,CERAMIC 100PF/50V CH
C2254	1-126-395-11	s	CAPACITOR,ELECT 22MF/16V(CHIP)
C2255	1-162-923-11	s	CAPACITOR,CERAMIC 47PF/50V CH
C2256	1-162-923-11	s	CAPACITOR,CERAMIC 47PF/50V CH
C2257	1-162-927-11	s	CAPACITOR,CERAMIC 100PF/50V CH
C2258	1-128-398-11	s	CAP, ELECT 220MF/16V (CHIP)
C2259	1-128-398-11	s	CAP, ELECT 220MF/16V (CHIP)
C2301	1-104-851-11	s	CAPACITOR,TANTALUM 10MF/10V
C2302	1-164-156-11	s	CAPACITOR,CERAMIC 0.1MF/25V F
C2303	1-164-156-11	s	CAPACITOR,CERAMIC 0.1MF/25V F
C2304	1-104-851-11	s	CAPACITOR,TANTALUM 10MF/10V
C2305	1-164-156-11	s	CAPACITOR,CERAMIC 0.1MF/25V F
C2306	1-126-394-11	s	CAPACITOR,ELECT 10MF/16V(CHIP)
C2307	1-126-394-11	s	CAPACITOR,ELECT 10MF/16V(CHIP)
C2308	1-162-927-11	s	CAPACITOR,CERAMIC 100PF/50V CH
C2309	1-162-927-11	s	CAPACITOR,CERAMIC 100PF/50V CH
C2310	1-164-227-11	s	CAPACITOR,CERAMIC 0.022MF/25V
C2311	1-164-227-11	s	CAPACITOR,CERAMIC 0.022MF/25V
C2312	1-126-395-11	s	CAPACITOR,ELECT 22MF/16V(CHIP)
C2313	1-162-927-11	s	CAPACITOR,CERAMIC 100PF/50V CH
C2314	1-164-156-11	s	CAPACITOR,CERAMIC 0.1MF/25V F
C2315	1-164-156-11	s	CAPACITOR,CERAMIC 0.1MF/25V F
C2351	1-164-156-11	s	CAPACITOR,CERAMIC 0.1MF/25V F
C2352	1-164-156-11	s	CAPACITOR,CERAMIC 0.1MF/25V F
C2353	1-162-927-11	s	CAPACITOR,CERAMIC 100PF/50V CH
C2354	1-126-395-11	s	CAPACITOR,ELECT 22MF/16V(CHIP)
C2355	1-162-923-11	s	CAPACITOR,CERAMIC 47PF/50V CH
C2356	1-162-923-11	s	CAPACITOR,CERAMIC 47PF/50V CH
C2357	1-162-927-11	s	CAPACITOR,CERAMIC 100PF/50V CH
C2358	1-128-398-11	s	CAP, ELECT 220MF/16V (CHIP)
C2359	1-128-398-11	s	CAP, ELECT 220MF/16V (CHIP)
C2406	1-126-394-11	s	CAPACITOR,ELECT 10MF/16V(CHIP)
C2407	1-126-394-11	s	CAPACITOR,ELECT 10MF/16V(CHIP)
C2408	1-162-927-11	s	CAPACITOR,CERAMIC 100PF/50V CH
C2409	1-162-927-11	s	CAPACITOR,CERAMIC 100PF/50V CH
C2410	1-164-227-11	s	CAPACITOR,CERAMIC 0.022MF/25V
C2411	1-164-227-11	s	CAPACITOR,CERAMIC 0.022MF/25V
C2412	1-126-395-11	s	CAPACITOR,ELECT 22MF/16V(CHIP)
C2413	1-162-927-11	s	CAPACITOR,CERAMIC 100PF/50V CH
C2414	1-164-156-11	s	CAPACITOR,CERAMIC 0.1MF/25V F
C2415	1-164-156-11	s	CAPACITOR,CERAMIC 0.1MF/25V F
C2451	1-164-156-11	s	CAPACITOR,CERAMIC 0.1MF/25V F
C2452	1-164-156-11	s	CAPACITOR,CERAMIC 0.1MF/25V F
C2453	1-162-927-11	s	CAPACITOR,CERAMIC 100PF/50V CH
C2454	1-126-395-11	s	CAPACITOR,ELECT 22MF/16V(CHIP)
C2455	1-162-923-11	s	CAPACITOR,CERAMIC 47PF/50V CH
C2456	1-162-923-11	s	CAPACITOR,CERAMIC 47PF/50V CH
C2457	1-162-927-11	s	CAPACITOR,CERAMIC 100PF/50V CH
C2458	1-128-398-11	s	CAP, ELECT 220MF/16V (CHIP)

(SSP-24/24A BOARD (for DSR-1800/P))

Ref. No. or Q'ty	Part No.	SP	Description
C2459	1-128-398-11	s	CAP, ELECT 220MF/16V (CHIP)
CN1	1-770-677-11	o	CONNECTOR,BOARD TO BOARD 50P
CN2	1-770-677-11	o	CONNECTOR,BOARD TO BOARD 50P
CN103	1-569-775-21	o	PIN, CONNECTOR 5P
CN1101	1-794-099-11	s	CONNECTOR, ROUND TYPE [for DSR-1800(UC), 1800P]
CN1101	1-794-097-11	s	CONNECTOR, ROUND TYPE [for DSR-1800(J)]
CN1201	1-794-099-11	s	CONNECTOR, ROUND TYPE [for DSR-1800(UC), 1800P]
CN1201	1-794-097-11	s	CONNECTOR, ROUND TYPE [for DSR-1800(J)]
CN1301	1-794-099-11	s	CONNECTOR, ROUND TYPE [for DSR-1800(UC), 1800P]
CN1301	1-794-097-11	s	CONNECTOR, ROUND TYPE [for DSR-1800(J)]
CN1401	1-794-099-11	s	CONNECTOR, ROUND TYPE [for DSR-1800(UC), 1800P]
CN1401	1-794-097-11	s	CONNECTOR, ROUND TYPE [for DSR-1800(J)]
CN1501	1-573-566-11	s	CONNECTOR (DELC-J9SAF-1029)
CN1504	1-794-820-11	s	JACK, PIN (1P)
CN2151	1-794-097-11	s	CONNECTOR, ROUND TYPE [for DSR-1800(UC), 1800P]
CN2151	1-794-099-11	s	CONNECTOR, ROUND TYPE [for DSR-1800(J)]
CN2251	1-794-097-11	s	CONNECTOR, ROUND TYPE [for DSR-1800(UC), 1800P]
CN2251	1-794-099-11	s	CONNECTOR, ROUND TYPE [for DSR-1800(J)]
CN2351	1-794-097-11	s	CONNECTOR, ROUND TYPE [for DSR-1800(UC), 1800P]
CN2351	1-794-099-11	s	CONNECTOR, ROUND TYPE [for DSR-1800(J)]
CN2451	1-794-097-11	s	CONNECTOR, ROUND TYPE [for DSR-1800(UC), 1800P]
CN2451	1-794-099-11	s	CONNECTOR, ROUND TYPE [for DSR-1800(J)]
D200	8-719-941-23	s	DIODE DA204U
D201	8-719-941-86	s	DIODE DAN202U
D202	8-719-941-09	s	DIODE DAP202U
D300	8-719-941-09	s	DIODE DAP202U
D301	8-719-048-43	s	DIODE MA795
D302	8-719-048-43	s	DIODE MA795
D600	8-719-987-69	s	DIODE DAN217
D601	8-719-987-69	s	DIODE DAN217
D602	8-719-987-69	s	DIODE DAN217
D603	8-719-987-69	s	DIODE DAN217
D604	8-719-987-69	s	DIODE DAN217
D605	8-719-987-69	s	DIODE DAN217
D1031	8-719-820-41	s	DIODE 1SS302
D1032	8-719-820-41	s	DIODE 1SS302
D1033	8-719-941-86	s	DIODE DAN202U
D1101	8-719-820-41	s	DIODE 1SS302
D1102	8-719-820-41	s	DIODE 1SS302
D1151	8-719-941-09	s	DIODE DAP202U
D1201	8-719-820-41	s	DIODE 1SS302
D1202	8-719-820-41	s	DIODE 1SS302
D1251	8-719-941-09	s	DIODE DAP202U
D1301	8-719-820-41	s	DIODE 1SS302

(SSP-24/24A BOARD (for DSR-1800/P))

Ref. No. or Q'ty	Part No.	SP	Description
D1302	8-719-820-41	s	DIODE 1SS302
D1351	8-719-941-09	s	DIODE DAP202U
D1401	8-719-820-41	s	DIODE 1SS302
D1402	8-719-820-41	s	DIODE 1SS302
D1451	8-719-941-09	s	DIODE DAP202U
D1601	8-719-157-20	s	DIODE RD4.3M-B
D1602	8-719-157-20	s	DIODE RD4.3M-B
D1603	8-719-157-20	s	DIODE RD4.3M-B
D2151	8-719-820-41	s	DIODE 1SS302
D2152	8-719-820-41	s	DIODE 1SS302
D2251	8-719-820-41	s	DIODE 1SS302
D2252	8-719-820-41	s	DIODE 1SS302
D2351	8-719-820-41	s	DIODE 1SS302
D2352	8-719-820-41	s	DIODE 1SS302
D2451	8-719-820-41	s	DIODE 1SS302
D2452	8-719-820-41	s	DIODE 1SS302
FL1501	1-239-895-11	s	FILTER, EMI (SMD)
FL1502	1-239-896-12	s	FILTER, EMI (SMD)
FL1503	1-239-896-12	s	FILTER, EMI (SMD)
FL1504	1-239-896-12	s	FILTER, EMI (SMD)
FL1505	1-239-896-12	s	FILTER, EMI (SMD)
FL2151	1-239-895-11	s	FILTER, EMI (SMD)
FL2152	1-239-895-11	s	FILTER, EMI (SMD)
FL2251	1-239-895-11	s	FILTER, EMI (SMD)
FL2252	1-239-895-11	s	FILTER, EMI (SMD)
FL2351	1-239-895-11	s	FILTER, EMI (SMD)
FL2352	1-239-895-11	s	FILTER, EMI (SMD)
FL2451	1-239-895-11	s	FILTER, EMI (SMD)
FL2452	1-239-895-11	s	FILTER, EMI (SMD)
IC101	8-759-442-54	s	IC RH5RL50AA-T1
IC200	8-759-337-40	s	IC NJM2904V(TE2)
IC201	8-759-491-46	s	IC TC74VHCT04AFT (EL)
IC202	8-759-348-69	s	IC HD6415108RF10
IC203	8-759-523-93	s	IC TC74VHC27FT (EL)
IC204	8-759-523-81	s	IC TC74VHC08FT(EL)
IC205	8-759-523-94	s	IC TC74VHC32FT(EL)
IC206	8-759-523-79	s	IC TC74VHC02FT
IC207	8-759-523-82	s	IC TC74VHC10FT (EL)
IC208	8-759-523-93	s	IC TC74VHC27FT (EL)
IC209	8-759-523-83	s	IC TC74VHC11FT(EL)
IC211	8-759-537-83	s	IC MBM29F400BC-70PFTN
IC212	8-759-491-50	s	IC TC74VHCT244AFT(EL)
IC213	8-759-491-51	s	IC TC74VHCT245AFT(EL)
IC214	8-759-497-29	s	IC LC35256DM-70-TLM
IC215	8-759-497-29	s	IC LC35256DM-70-TLM
IC301	8-759-064-36	s	IC MB88346BPFV
IC302	8-759-337-40	s	IC NJM2904V(TE2)
IC303	8-759-273-87	s	IC NJM2901V (TE2)
IC304	8-759-466-53	s	IC NJM2060V(TE2)
IC305	8-759-338-95	s	IC NJM2903V (TE2)
IC306	8-759-523-02	s	IC TC74HC4053AFT(EL)
IC307	8-759-444-87	s	IC NJM324V (TE2)
IC308	8-759-273-87	s	IC NJM2901V (TE2)
IC309	8-759-466-53	s	IC NJM2060V(TE2)
IC310	8-759-523-96	s	IC TC74VHC86FT (EL)
IC311	8-759-523-02	s	IC TC74HC4053AFT(EL)
IC312	8-759-523-02	s	IC TC74HC4053AFT(EL)
IC313	8-759-466-53	s	IC NJM2060V(TE2)

(SSP-24/24A BOARD (for DSR-1800/P))

Ref. No. or Q'ty	Part No.	SP	Description
IC314	8-759-278-58	s	IC NJM4558V (TE2)
IC400	8-759-259-77	s	IC PQ20VZ5U
IC402	8-759-271-88	s	IC TC7SHU04FU
IC403	8-759-524-07	s	IC TC74VHC138FT(EL)
IC404	8-759-524-07	s	IC TC74VHC138FT(EL)
IC405	8-759-524-07	s	IC TC74VHC138FT(EL)
IC406	8-759-564-49	s	IC TC7W53FU-TE12R
IC500	8-759-523-81	s	IC TC74VHC08FT(EL)
IC501	8-759-525-99	s	IC HD6437021SC02X
IC503	8-759-577-24	s	IC KM6161000BLT-5L
IC504	8-759-523-94	s	IC TC74VHC32FT(EL)
IC505	8-759-327-80	s	IC S-80745SN-D9-T1
IC506	8-759-084-79	s	IC TC7S14F
IC507	8-759-524-07	s	IC TC74VHC138FT(EL)
IC508	8-759-524-07	s	IC TC74VHC138FT(EL)
IC509	8-759-490-41	s	IC TC74VHCT541AFT(EL)
IC510	8-759-491-50	s	IC TC74VHCT244AFT(EL)
IC511	8-759-524-28	s	IC TC74VHC245FT(EL)
IC512	8-759-479-32	s	IC SN75C1168NS (E05)
IC513	8-759-524-28	s	IC TC74VHC245FT(EL)
IC514	8-759-524-04	s	IC TC74VHC125FT (EL)
IC515	8-759-491-51	s	IC TC74VHCT245AFT(EL)
IC516	8-759-523-94	s	IC TC74VHC32FT(EL)
IC517	8-759-491-46	s	IC TC74VHCT04AFT (EL)
IC518	8-759-524-07	s	IC TC74VHC138FT(EL)
IC519	8-759-486-26	s	IC MBM29F800BA-70PFTN
IC600	8-759-399-65	s	IC M48Z58Y-70MH1TR
IC601	8-759-524-28	s	IC TC74VHC245FT(EL)
IC602	8-759-490-41	s	IC TC74VHCT541AFT(EL)
IC603	8-759-270-56	s	IC SN74HC377ANS (E20)
IC604	8-759-369-73	s	IC NJM4556AM
IC605	8-759-100-96	s	IC UPC4558G2
IC606	8-759-700-07	s	IC NJM2903M
IC1101	8-759-711-85	s	IC NJM4580E-D
IC1102	8-759-523-01	s	IC TC74HC4052AFT(EL)
IC1151	8-759-394-76	s	IC NJM2068M-D (TE2)
IC1152	8-759-523-01	s	IC TC74HC4052AFT(EL)
IC1153	8-759-711-85	s	IC NJM4580E-D
IC1154	8-759-462-08	s	IC AK5352-VF (E2)
IC1155	8-759-490-41	s	IC TC74VHCT541AFT(EL)
IC1156	8-759-497-44	s	IC TC7WH125FU(TE12R)
IC1201	8-759-711-85	s	IC NJM4580E-D
IC1202	8-759-523-01	s	IC TC74HC4052AFT(EL)
IC1251	8-759-394-76	s	IC NJM2068M-D (TE2)
IC1252	8-759-523-01	s	IC TC74HC4052AFT(EL)
IC1253	8-759-711-85	s	IC NJM4580E-D
IC1301	8-759-711-85	s	IC NJM4580E-D
IC1302	8-759-523-01	s	IC TC74HC4052AFT(EL)
IC1303	8-759-490-41	s	IC TC74VHCT541AFT(EL)
IC1351	8-759-394-76	s	IC NJM2068M-D (TE2)
IC1352	8-759-523-01	s	IC TC74HC4052AFT(EL)
IC1353	8-759-711-85	s	IC NJM4580E-D
IC1354	8-759-462-08	s	IC AK5352-VF (E2)
IC1401	8-759-711-85	s	IC NJM4580E-D
IC1402	8-759-523-01	s	IC TC74HC4052AFT(EL)
IC1451	8-759-394-76	s	IC NJM2068M-D (TE2)
IC1452	8-759-523-01	s	IC TC74HC4052AFT(EL)
IC1453	8-759-711-85	s	IC NJM4580E-D
IC1501	8-759-711-85	s	IC NJM4580E-D

(SSP-24/24A BOARD (for DSR-1800/P))

Ref. No. or Q'ty	Part No.	SP	Description
IC1502	8-759-711-85	s	IC NJM4580E-D
IC1503	8-759-711-85	s	IC NJM4580E-D
IC1505	8-759-536-23	s	IC AK4324-VF-E2
IC1601	8-759-324-03	s	IC HA17431UA(TL)
IC1602	8-759-710-78	s	IC NJM082BM
IC1603	8-759-710-78	s	IC NJM082BM
IC2101	8-759-536-23	s	IC AK4324-VF-E2
IC2102	8-759-711-85	s	IC NJM4580E-D
IC2103	8-759-523-01	s	IC TC74HC4052AFT(EL)
IC2104	8-759-490-41	s	IC TC74VHCT541AFT(EL)
IC2151	8-759-523-01	s	IC TC74HC4052AFT(EL)
IC2152	8-759-711-85	s	IC NJM4580E-D
IC2153	8-759-281-24	s	IC SSM-2142S (R)
IC2202	8-759-711-85	s	IC NJM4580E-D
IC2203	8-759-523-01	s	IC TC74HC4052AFT(EL)
IC2251	8-759-523-01	s	IC TC74HC4052AFT(EL)
IC2252	8-759-711-85	s	IC NJM4580E-D
IC2253	8-759-281-24	s	IC SSM-2142S (R)
IC2301	8-759-536-23	s	IC AK4324-VF-E2
IC2302	8-759-711-85	s	IC NJM4580E-D
IC2303	8-759-523-01	s	IC TC74HC4052AFT(EL)
IC2351	8-759-523-01	s	IC TC74HC4052AFT(EL)
IC2352	8-759-711-85	s	IC NJM4580E-D
IC2353	8-759-281-24	s	IC SSM-2142S (R)
IC2402	8-759-711-85	s	IC NJM4580E-D
IC2403	8-759-523-01	s	IC TC74HC4052AFT(EL)
IC2451	8-759-523-01	s	IC TC74HC4052AFT(EL)
IC2452	8-759-711-85	s	IC NJM4580E-D
IC2453	8-759-281-24	s	IC SSM-2142S (R)
L101	1-412-030-11	s	INDUCTOR,CHIP 22UH (3225)
L102	1-406-824-11	s	COIL, CHOKE 22UH
L103	1-412-030-11	s	INDUCTOR,CHIP 22UH (3225)
L104	1-412-030-11	s	INDUCTOR,CHIP 22UH (3225)
L400	1-414-398-11	s	INDUCTOR (SMD) 10UH
L401	1-414-398-11	s	INDUCTOR (SMD) 10UH
L1101	1-410-380-31	s	INDUCTOR,CHIP 8.2UH (3225)
L1102	1-410-380-31	s	INDUCTOR,CHIP 8.2UH (3225)
L1201	1-410-380-31	s	INDUCTOR,CHIP 8.2UH (3225)
L1202	1-410-380-31	s	INDUCTOR,CHIP 8.2UH (3225)
L1301	1-410-380-31	s	INDUCTOR,CHIP 8.2UH (3225)
L1302	1-410-380-31	s	INDUCTOR,CHIP 8.2UH (3225)
L1401	1-410-380-31	s	INDUCTOR,CHIP 8.2UH (3225)
L1402	1-410-380-31	s	INDUCTOR,CHIP 8.2UH (3225)
L1601	1-424-643-11	s	COIL, CHOKE 10UH
L1602	1-424-643-11	s	COIL, CHOKE 10UH
L1603	1-412-030-11	s	INDUCTOR,CHIP 22UH (3225)
L1604	1-412-030-11	s	INDUCTOR,CHIP 22UH (3225)
L1609	1-414-398-11	s	INDUCTOR (SMD) 10UH
PS101	⚠ 1-576-124-11	s	LINK IC 1A (3225)
PS102	⚠ 1-576-124-11	s	LINK IC 1A (3225)
PS103	⚠ 1-576-124-11	s	LINK IC 1A (3225)
PS104	⚠ 1-576-124-11	s	LINK IC 1A (3225)
PS105	⚠ 1-576-124-11	s	LINK IC 1A (3225)
PS106	⚠ 1-576-124-11	s	LINK IC 1A (3225)
Q500	8-729-117-32	s	TRANSISTOR 2SC4177
Q600	8-729-027-38	s	TRANSISTOR DTA144EAK-T146
Q601	8-729-027-38	s	TRANSISTOR DTA144EAK-T146
Q602	8-729-422-44	s	TRANSISTOR 2SK663

(SSP-24/24A BOARD (for DSR-1800/P))

Ref. No. or Q'ty	Part No.	SP	Description
Q603	8-729-422-44	s	TRANSISTOR 2SK663
Q1001	8-729-020-93	s	TRANSISTOR 2SC2982C-TE12L
Q1002	8-729-106-60	s	TRANSISTOR 2SB1115A
Q1031	8-729-029-14	s	TRANSISTOR DTC144EUA-T106
Q1032	8-729-110-94	s	TRANSISTOR 2SK425-X15 (0.2W)
Q1033	8-729-141-48	s	TRANSISTOR 2SB624-BV345
Q1034	8-729-110-94	s	TRANSISTOR 2SK425-X15 (0.2W)
Q1151	8-729-029-14	s	TRANSISTOR DTC144EUA-T106
Q1501	8-729-209-07	s	TRANSISTOR 2SC4213-B
Q1502	8-729-209-07	s	TRANSISTOR 2SC4213-B
Q1503	8-729-209-07	s	TRANSISTOR 2SC4213-B
Q1601	8-729-020-94	s	TRANSISTOR 2SA1314C-TE12L
Q1602	8-729-808-42	s	TRANSISTOR 2SD1624-T
Q1603	8-729-141-48	s	TRANSISTOR 2SB624-BV345
Q2151	8-729-209-07	s	TRANSISTOR 2SC4213-B
Q2153	8-729-209-07	s	TRANSISTOR 2SC4213-B
Q2154	8-729-209-07	s	TRANSISTOR 2SC4213-B
Q2251	8-729-209-07	s	TRANSISTOR 2SC4213-B
Q2253	8-729-209-07	s	TRANSISTOR 2SC4213-B
Q2254	8-729-209-07	s	TRANSISTOR 2SC4213-B
Q2351	8-729-209-07	s	TRANSISTOR 2SC4213-B
Q2353	8-729-209-07	s	TRANSISTOR 2SC4213-B
Q2354	8-729-209-07	s	TRANSISTOR 2SC4213-B
Q2451	8-729-209-07	s	TRANSISTOR 2SC4213-B
Q2453	8-729-209-07	s	TRANSISTOR 2SC4213-B
Q2454	8-729-209-07	s	TRANSISTOR 2SC4213-B
R102	1-218-823-11	s	RESISTOR,CHIP 100 1/16W (1608)
R104	1-220-258-11	s	RESISTOR, CHIP 100 1/4W (3225)
R200	1-218-879-11	s	RESISTOR,CHIP 22K 1/16W (1608)
R201	1-218-879-11	s	RESISTOR,CHIP 22K 1/16W (1608)
R203	1-218-879-11	s	RESISTOR,CHIP 22K 1/16W (1608)
R204	1-218-895-11	s	RESISTOR,CHIP 100K 1/16W(1608)
R205	1-218-891-11	s	RESISTOR,CHIP 68K 1/16W (1608)
R206	1-218-887-11	s	RESISTOR,CHIP 47K 1/16W (1608)
R207	1-218-879-11	s	RESISTOR,CHIP 22K 1/16W (1608)
R208	1-218-879-11	s	RESISTOR,CHIP 22K 1/16W (1608)
R209	1-218-871-11	s	RESISTOR,CHIP 10K 1/16W (1608)
R210	1-218-887-11	s	RESISTOR,CHIP 47K 1/16W (1608)
R211	1-218-879-11	s	RESISTOR,CHIP 22K 1/16W (1608)
R212	1-218-895-11	s	RESISTOR,CHIP 100K 1/16W(1608)
R213	1-218-879-11	s	RESISTOR,CHIP 22K 1/16W (1608)
R214	1-218-871-11	s	RESISTOR,CHIP 10K 1/16W (1608)
R215	1-218-887-11	s	RESISTOR,CHIP 47K 1/16W (1608)
R216	1-218-871-11	s	RESISTOR,CHIP 10K 1/16W (1608)
R217	1-218-871-11	s	RESISTOR,CHIP 10K 1/16W (1608)
R218	1-218-871-11	s	RESISTOR,CHIP 10K 1/16W (1608)
R219	1-218-887-11	s	RESISTOR,CHIP 47K 1/16W (1608)
R220	1-218-823-11	s	RESISTOR,CHIP 100 1/16W (1608)
R221	1-218-887-11	s	RESISTOR,CHIP 47K 1/16W (1608)
R222	1-218-823-11	s	RESISTOR,CHIP 100 1/16W (1608)
R223	1-216-805-11	s	RESISTOR,CHIP 47 1/16W 1608
R224	1-216-805-11	s	RESISTOR,CHIP 47 1/16W 1608
R227	1-218-887-11	s	RESISTOR,CHIP 47K 1/16W (1608)
R228	1-218-887-11	s	RESISTOR,CHIP 47K 1/16W (1608)
R229	1-218-887-11	s	RESISTOR,CHIP 47K 1/16W (1608)
R231	1-218-887-11	s	RESISTOR,CHIP 47K 1/16W (1608)
R232	1-218-847-11	s	RESISTOR, CHIP 1K 1/16W (1608)
R233	1-216-805-11	s	RESISTOR,CHIP 47 1/16W 1608

(SSP-24/24A BOARD (for DSR-1800/P))

Ref. No. or Q'ty	Part No.	SP	Description
R234	1-216-805-11	s	RESISTOR,CHIP 47 1/16W 1608
R235	1-216-805-11	s	RESISTOR,CHIP 47 1/16W 1608
R236	1-218-879-11	s	RESISTOR,CHIP 22K 1/16W (1608)
R237	1-218-879-11	s	RESISTOR,CHIP 22K 1/16W (1608)
R300	1-218-887-11	s	RESISTOR,CHIP 47K 1/16W (1608)
R301	1-218-883-11	s	RESISTOR,CHIP 33K 1/16W (1608)
R302	1-218-879-11	s	RESISTOR,CHIP 22K 1/16W (1608)
R303	1-218-847-11	s	RESISTOR, CHIP 1K 1/16W (1608)
R304	1-218-871-11	s	RESISTOR,CHIP 10K 1/16W (1608)
R305	1-218-871-11	s	RESISTOR,CHIP 10K 1/16W (1608)
R306	1-216-853-11	s	RESISTOR,CHIP 470K 1/16W(1608)
R307	1-218-855-11	s	RESISTOR,CHIP 2.2K 1/16W(1608)
R308	1-218-891-11	s	RESISTOR,CHIP 68K 1/16W (1608)
R309	1-218-891-11	s	RESISTOR,CHIP 68K 1/16W (1608)
R310	1-218-891-11	s	RESISTOR,CHIP 68K 1/16W (1608)
R311	1-218-883-11	s	RESISTOR,CHIP 33K 1/16W (1608)
R312	1-218-895-11	s	RESISTOR,CHIP 100K 1/16W(1608)
R313	1-218-871-11	s	RESISTOR,CHIP 10K 1/16W (1608)
R314	1-218-871-11	s	RESISTOR,CHIP 10K 1/16W (1608)
R315	1-216-853-11	s	RESISTOR,CHIP 470K 1/16W(1608)
R316	1-218-855-11	s	RESISTOR,CHIP 2.2K 1/16W(1608)
R317	1-218-891-11	s	RESISTOR,CHIP 68K 1/16W (1608)
R318	1-218-891-11	s	RESISTOR,CHIP 68K 1/16W (1608)
R319	1-218-891-11	s	RESISTOR,CHIP 68K 1/16W (1608)
R320	1-218-883-11	s	RESISTOR,CHIP 33K 1/16W (1608)
R321	1-218-895-11	s	RESISTOR,CHIP 100K 1/16W(1608)
R322	1-218-871-11	s	RESISTOR,CHIP 10K 1/16W (1608)
R323	1-218-871-11	s	RESISTOR,CHIP 10K 1/16W (1608)
R324	1-216-853-11	s	RESISTOR,CHIP 470K 1/16W(1608)
R325	1-218-855-11	s	RESISTOR,CHIP 2.2K 1/16W(1608)
R326	1-218-887-11	s	RESISTOR,CHIP 47K 1/16W (1608)
R328	1-218-871-11	s	RESISTOR,CHIP 10K 1/16W (1608)
R329	1-218-871-11	s	RESISTOR,CHIP 10K 1/16W (1608)
R330	1-218-871-11	s	RESISTOR,CHIP 10K 1/16W (1608)
R331	1-216-853-11	s	RESISTOR,CHIP 470K 1/16W(1608)
R332	1-218-887-11	s	RESISTOR,CHIP 47K 1/16W (1608)
R333	1-216-826-11	s	RESISTOR,CHIP 2.7K 1/16W(1608)
R334	1-218-855-11	s	RESISTOR,CHIP 2.2K 1/16W(1608)
R335	1-218-879-11	s	RESISTOR,CHIP 22K 1/16W (1608)
R336	1-218-879-11	s	RESISTOR,CHIP 22K 1/16W (1608)
R337	1-218-863-11	s	RESISTOR,CHIP 4.7K 1/16W(1608)
R338	1-218-863-11	s	RESISTOR,CHIP 4.7K 1/16W(1608)
R339	1-218-871-11	s	RESISTOR,CHIP 10K 1/16W (1608)
R340	1-218-879-11	s	RESISTOR,CHIP 22K 1/16W (1608)
R341	1-218-883-11	s	RESISTOR,CHIP 33K 1/16W (1608)
R342	1-218-883-11	s	RESISTOR,CHIP 33K 1/16W (1608)
R343	1-218-883-11	s	RESISTOR,CHIP 33K 1/16W (1608)
R344	1-218-883-11	s	RESISTOR,CHIP 33K 1/16W (1608)
R345	1-218-887-11	s	RESISTOR,CHIP 47K 1/16W (1608)
R346	1-218-887-11	s	RESISTOR,CHIP 47K 1/16W (1608)
R347	1-216-853-11	s	RESISTOR,CHIP 470K 1/16W(1608)
R348	1-218-879-11	s	RESISTOR,CHIP 22K 1/16W (1608)
R349	1-218-879-11	s	RESISTOR,CHIP 22K 1/16W (1608)
R350	1-218-879-11	s	RESISTOR,CHIP 22K 1/16W (1608)
R351	1-218-889-11	s	RESISTOR,CHIP 56K 1/16W(1608)
R352	1-218-887-11	s	RESISTOR,CHIP 47K 1/16W (1608)
R353	1-218-871-11	s	RESISTOR,CHIP 10K 1/16W (1608)
R354	1-218-871-11	s	RESISTOR,CHIP 10K 1/16W (1608)
R355	1-218-881-11	s	RESISTOR, CHIP 27K 1/16W(1608)

(SSP-24/24A BOARD (for DSR-1800/P))

Ref. No. or Q'ty	Part No.	SP	Description
R356	1-218-881-11	s	RESISTOR, CHIP 27K 1/16W(1608)
R357	1-218-891-11	s	RESISTOR,CHIP 68K 1/16W (1608)
R358	1-218-891-11	s	RESISTOR,CHIP 68K 1/16W (1608)
R359	1-218-891-11	s	RESISTOR,CHIP 68K 1/16W (1608)
R360	1-218-883-11	s	RESISTOR,CHIP 33K 1/16W (1608)
R361	1-218-891-11	s	RESISTOR,CHIP 68K 1/16W (1608)
R362	1-218-871-11	s	RESISTOR,CHIP 10K 1/16W (1608)
R363	1-218-871-11	s	RESISTOR,CHIP 10K 1/16W (1608)
R364	1-216-853-11	s	RESISTOR,CHIP 470K 1/16W(1608)
R365	1-218-855-11	s	RESISTOR,CHIP 2.2K 1/16W(1608)
R366	1-218-891-11	s	RESISTOR,CHIP 68K 1/16W (1608)
R367	1-218-891-11	s	RESISTOR,CHIP 68K 1/16W (1608)
R368	1-218-891-11	s	RESISTOR,CHIP 68K 1/16W (1608)
R369	1-218-883-11	s	RESISTOR,CHIP 33K 1/16W (1608)
R370	1-218-891-11	s	RESISTOR,CHIP 68K 1/16W (1608)
R371	1-218-871-11	s	RESISTOR,CHIP 10K 1/16W (1608)
R372	1-218-871-11	s	RESISTOR,CHIP 10K 1/16W (1608)
R373	1-216-853-11	s	RESISTOR,CHIP 470K 1/16W(1608)
R374	1-218-855-11	s	RESISTOR,CHIP 2.2K 1/16W(1608)
R375	1-216-842-11	s	RESISTOR,CHIP 56K 1/16W(1608)
R376	1-216-842-11	s	RESISTOR,CHIP 56K 1/16W(1608)
R377	1-216-842-11	s	RESISTOR,CHIP 56K 1/16W(1608)
R378	1-218-889-11	s	RESISTOR,CHIP 56K 1/16W(1608)
R379	1-218-887-11	s	RESISTOR,CHIP 47K 1/16W (1608)
R381	1-218-863-11	s	RESISTOR,CHIP 4.7K 1/16W(1608)
R382	1-218-871-11	s	RESISTOR,CHIP 10K 1/16W (1608)
R383	1-218-871-11	s	RESISTOR,CHIP 10K 1/16W (1608)
R384	1-216-853-11	s	RESISTOR,CHIP 470K 1/16W(1608)
R385	1-218-887-11	s	RESISTOR,CHIP 47K 1/16W (1608)
R386	1-216-826-11	s	RESISTOR,CHIP 2.7K 1/16W(1608)
R387	1-218-855-11	s	RESISTOR,CHIP 2.2K 1/16W(1608)
R388	1-218-879-11	s	RESISTOR,CHIP 22K 1/16W (1608)
R389	1-218-879-11	s	RESISTOR,CHIP 22K 1/16W (1608)
R390	1-218-879-11	s	RESISTOR,CHIP 22K 1/16W (1608)
R391	1-218-883-11	s	RESISTOR,CHIP 33K 1/16W (1608)
R392	1-218-879-11	s	RESISTOR,CHIP 22K 1/16W (1608)
R393	1-218-883-11	s	RESISTOR,CHIP 33K 1/16W (1608)
R394	1-218-883-11	s	RESISTOR,CHIP 33K 1/16W (1608)
R395	1-218-887-11	s	RESISTOR,CHIP 47K 1/16W (1608)
R396	1-218-887-11	s	RESISTOR,CHIP 47K 1/16W (1608)
R397	1-218-887-11	s	RESISTOR,CHIP 47K 1/16W (1608)
R398	1-218-895-11	s	RESISTOR,CHIP 100K 1/16W(1608)
R399	1-216-842-11	s	RESISTOR,CHIP 56K 1/16W(1608)
R400	1-218-891-11	s	RESISTOR,CHIP 68K 1/16W (1608)
R401	1-218-891-11	s	RESISTOR,CHIP 68K 1/16W (1608)
R402	1-218-891-11	s	RESISTOR,CHIP 68K 1/16W (1608)
R403	1-218-883-11	s	RESISTOR,CHIP 33K 1/16W (1608)
R404	1-218-891-11	s	RESISTOR,CHIP 68K 1/16W (1608)
R405	1-218-871-11	s	RESISTOR,CHIP 10K 1/16W (1608)
R406	1-218-871-11	s	RESISTOR,CHIP 10K 1/16W (1608)
R407	1-216-853-11	s	RESISTOR,CHIP 470K 1/16W(1608)
R408	1-218-855-11	s	RESISTOR,CHIP 2.2K 1/16W(1608)
R409	1-218-891-11	s	RESISTOR,CHIP 68K 1/16W (1608)
R410	1-218-891-11	s	RESISTOR,CHIP 68K 1/16W (1608)
R411	1-218-891-11	s	RESISTOR,CHIP 68K 1/16W (1608)
R412	1-218-883-11	s	RESISTOR,CHIP 33K 1/16W (1608)
R413	1-218-891-11	s	RESISTOR,CHIP 68K 1/16W (1608)
R414	1-218-871-11	s	RESISTOR,CHIP 10K 1/16W (1608)
R415	1-218-871-11	s	RESISTOR,CHIP 10K 1/16W (1608)

(SSP-24/24A BOARD (for DSR-1800/P))

Ref. No. or Q'ty	Part No.	SP	Description
R416	1-216-853-11	s	RESISTOR,CHIP 470K 1/16W(1608)
R417	1-218-855-11	s	RESISTOR,CHIP 2.2K 1/16W(1608)
R418	1-216-842-11	s	RESISTOR,CHIP 56K 1/16W(1608)
R419	1-216-842-11	s	RESISTOR,CHIP 56K 1/16W(1608)
R420	1-216-842-11	s	RESISTOR,CHIP 56K 1/16W(1608)
R421	1-218-889-11	s	RESISTOR,CHIP 56K 1/16W(1608)
R450	1-218-847-11	s	RESISTOR, CHIP 1K 1/16W (1608)
R451	1-218-847-11	s	RESISTOR, CHIP 1K 1/16W (1608)
R452	1-218-887-11	s	RESISTOR,CHIP 47K 1/16W (1608)
R453	1-216-857-11	s	RESISTOR,CHIP 1M 1/16W(1608)
R454	1-218-839-11	s	RESISTOR,CHIP 470 1/16W (1608)
R456	1-218-879-11	s	RESISTOR,CHIP 22K 1/16W (1608)
R457	1-218-879-11	s	RESISTOR,CHIP 22K 1/16W (1608)
R458	1-218-823-11	s	RESISTOR,CHIP 100 1/16W (1608)
R459	1-218-823-11	s	RESISTOR,CHIP 100 1/16W (1608)
R460	1-216-829-11	s	RESISTOR,CHIP 4.7K 1/16W(1608)
R461	1-218-879-11	s	RESISTOR,CHIP 22K 1/16W (1608)
R463	1-218-823-11	s	RESISTOR,CHIP 100 1/16W (1608)
R464	1-218-879-11	s	RESISTOR,CHIP 22K 1/16W (1608)
R465	1-218-879-11	s	RESISTOR,CHIP 22K 1/16W (1608)
R466	1-218-879-11	s	RESISTOR,CHIP 22K 1/16W (1608)
R467	1-218-879-11	s	RESISTOR,CHIP 22K 1/16W (1608)
R468	1-216-864-11	s	RESISTOR,CHIP 0 1/16W (1608)
R469	1-216-864-11	s	RESISTOR,CHIP 0 1/16W (1608)
R470	1-218-823-11	s	RESISTOR,CHIP 100 1/16W (1608)
R471	1-218-823-11	s	RESISTOR,CHIP 100 1/16W (1608)
R472	1-218-887-11	s	RESISTOR,CHIP 47K 1/16W (1608)
R473	1-216-797-11	s	RESISTOR,CHIP 10 1/16W 1608
R474	1-216-801-11	s	RESISTOR,CHIP 22 1/16W (1608)
R478	1-218-879-11	s	RESISTOR,CHIP 22K 1/16W (1608)
R479	1-218-879-11	s	RESISTOR,CHIP 22K 1/16W (1608)
R480	1-218-879-11	s	RESISTOR,CHIP 22K 1/16W (1608)
R481	1-218-879-11	s	RESISTOR,CHIP 22K 1/16W (1608)
R482	1-218-823-11	s	RESISTOR,CHIP 100 1/16W (1608)
R500	1-216-805-11	s	RESISTOR,CHIP 47 1/16W 1608
R501	1-216-805-11	s	RESISTOR,CHIP 47 1/16W 1608
R502	1-216-805-11	s	RESISTOR,CHIP 47 1/16W 1608
R503	1-218-879-11	s	RESISTOR,CHIP 22K 1/16W (1608)
R504	1-216-801-11	s	RESISTOR,CHIP 22 1/16W (1608)
R505	1-218-887-11	s	RESISTOR,CHIP 47K 1/16W (1608)
R506	1-218-887-11	s	RESISTOR,CHIP 47K 1/16W (1608)
R507	1-218-887-11	s	RESISTOR,CHIP 47K 1/16W (1608)
R509	1-218-895-11	s	RESISTOR,CHIP 100K 1/16W(1608)
R510	1-218-823-11	s	RESISTOR,CHIP 100 1/16W (1608)
R511	1-218-847-11	s	RESISTOR, CHIP 1K 1/16W (1608)
R513	1-218-887-11	s	RESISTOR,CHIP 47K 1/16W (1608)
R514	1-218-823-11	s	RESISTOR,CHIP 100 1/16W (1608)
R515	1-218-887-11	s	RESISTOR,CHIP 47K 1/16W (1608)
R516	1-216-801-11	s	RESISTOR,CHIP 22 1/16W (1608)
R517	1-218-823-11	s	RESISTOR,CHIP 100 1/16W (1608)
R518	1-216-864-11	s	RESISTOR,CHIP 0 1/16W (1608)
R524	1-216-801-11	s	RESISTOR,CHIP 22 1/16W (1608)
R526	1-216-801-11	s	RESISTOR,CHIP 22 1/16W (1608)
R600	1-216-801-11	s	RESISTOR,CHIP 22 1/16W (1608)
R601	1-216-801-11	s	RESISTOR,CHIP 22 1/16W (1608)
R602	1-216-801-11	s	RESISTOR,CHIP 22 1/16W (1608)
R603	1-216-801-11	s	RESISTOR,CHIP 22 1/16W (1608)
R604	1-216-801-11	s	RESISTOR,CHIP 22 1/16W (1608)
R605	1-216-801-11	s	RESISTOR,CHIP 22 1/16W (1608)

(SSP-24/24A BOARD (for DSR-1800/P))

Ref. No. or Q'ty	Part No.	SP	Description
R606	1-218-859-11	s	RESISTOR,CHIP 3.3K 1/16W(1608)
R608	1-218-887-11	s	RESISTOR,CHIP 47K 1/16W (1608)
R609	1-218-887-11	s	RESISTOR,CHIP 47K 1/16W (1608)
R610	1-218-855-11	s	RESISTOR,CHIP 2.2K 1/16W(1608)
R611	1-218-855-11	s	RESISTOR,CHIP 2.2K 1/16W(1608)
R612	1-211-990-11	s	RESISTOR,CHIP 75 1/16W (1608)
R613	1-218-895-11	s	RESISTOR,CHIP 100K 1/16W(1608)
R614	1-216-832-11	s	RESISTOR,CHIP 8.2K 1/16W 1608
R615	1-218-879-11	s	RESISTOR,CHIP 22K 1/16W (1608)
R616	1-218-879-11	s	RESISTOR,CHIP 22K 1/16W (1608)
R617	1-218-859-11	s	RESISTOR,CHIP 3.3K 1/16W(1608)
R618	1-218-895-11	s	RESISTOR,CHIP 100K 1/16W(1608)
R619	1-216-857-11	s	RESISTOR,CHIP 1M 1/16W(1608)
R620	1-216-857-11	s	RESISTOR,CHIP 1M 1/16W(1608)
R621	1-218-847-11	s	RESISTOR, CHIP 1K 1/16W (1608)
R622	1-216-857-11	s	RESISTOR,CHIP 1M 1/16W(1608)
R623	1-216-857-11	s	RESISTOR,CHIP 1M 1/16W(1608)
R624	1-218-863-11	s	RESISTOR,CHIP 4.7K 1/16W(1608)
R625	1-218-895-11	s	RESISTOR,CHIP 100K 1/16W(1608)
R626	1-218-857-11	s	RESISTOR,CHIP 2.7K 1/16W(1608)
R628	1-218-865-11	s	RESISTOR,CHIP 5.6K 1/16W(1608)
R629	1-218-863-11	s	RESISTOR,CHIP 4.7K 1/16W(1608)
R630	1-218-871-11	s	RESISTOR,CHIP 10K 1/16W (1608)
R1001	1-218-895-11	s	RESISTOR,CHIP 100K 1/16W(1608) [for DSR-1800(UC), 1800P]
R1002	1-218-895-11	s	RESISTOR,CHIP 100K 1/16W(1608) [for DSR-1800(UC), 1800P]
R1003	1-218-847-11	s	RESISTOR, CHIP 1K 1/16W (1608)
R1004	1-218-847-11	s	RESISTOR, CHIP 1K 1/16W (1608)
R1011	1-218-895-11	s	RESISTOR,CHIP 100K 1/16W(1608)
R1012	1-218-895-11	s	RESISTOR,CHIP 100K 1/16W(1608)
R1031	1-218-839-11	s	RESISTOR,CHIP 470 1/16W (1608)
R1032	1-218-823-11	s	RESISTOR,CHIP 100 1/16W (1608)
R1033	1-218-861-11	s	RESISTOR,CHIP 3.9K 1/16W(1608)
R1101	1-218-864-11	s	RESISTOR,CHIP 5.1K 1/16W(1608)
R1102	1-218-831-11	s	RESISTOR, CHIP 220 1/16W(1608)
R1105	1-218-825-11	s	RESISTOR,CHIP 120 1/16W (1608)
R1106	1-218-842-11	s	RESISTOR,CHIP 620 1/16W (1608)
R1107	1-218-867-11	s	RESISTOR,CHIP 6.8K 1/16W(1608)
R1108	1-218-867-11	s	RESISTOR,CHIP 6.8K 1/16W(1608)
R1109	1-218-834-11	s	RESISTOR,CHIP 300 1/16W (1608)
R1110	1-218-834-11	s	RESISTOR,CHIP 300 1/16W (1608)
R1111	1-218-861-11	s	RESISTOR,CHIP 3.9K 1/16W(1608)
R1112	1-218-883-11	s	RESISTOR,CHIP 33K 1/16W (1608)
R1115	1-218-883-11	s	RESISTOR,CHIP 33K 1/16W (1608)
R1116	1-218-859-11	s	RESISTOR,CHIP 3.3K 1/16W(1608)
R1117	1-218-859-11	s	RESISTOR,CHIP 3.3K 1/16W(1608)
R1119	1-218-872-11	s	RESISTOR,CHIP 11K 1/16W (1608)
R1120	1-218-858-11	s	RESISTOR, CHIP 3K 1/16W (1608)
R1151	1-218-863-11	s	RESISTOR,CHIP 4.7K 1/16W(1608)
R1152	1-218-863-11	s	RESISTOR,CHIP 4.7K 1/16W(1608)
R1153	1-218-863-11	s	RESISTOR,CHIP 4.7K 1/16W(1608)
R1154	1-218-863-11	s	RESISTOR,CHIP 4.7K 1/16W(1608)
R1155	1-218-839-11	s	RESISTOR,CHIP 470 1/16W (1608)
R1156	1-218-853-11	s	RESISTOR,CHIP 1.8K 1/16W(1608)
R1157	1-218-875-11	s	RESISTOR,CHIP 15K 1/16W (1608)
R1158	1-218-875-11	s	RESISTOR,CHIP 15K 1/16W (1608)
R1159	1-218-868-11	s	RESISTOR,CHIP 7.5K 1/16W(1608)
R1160	1-218-872-11	s	RESISTOR,CHIP 11K 1/16W (1608)

(SSP-24/24A BOARD (for DSR-1800/P))

Ref. No. or Q'ty	Part No.	SP	Description
R1161	1-218-861-11	s	RESISTOR,CHIP 3.9K 1/16W(1608)
R1162	1-218-845-11	s	RESISTOR,CHIP 820 1/16W (1608)
R1163	1-218-871-11	s	RESISTOR,CHIP 10K 1/16W (1608)
R1164	1-218-871-11	s	RESISTOR,CHIP 10K 1/16W (1608)
R1165	1-218-871-11	s	RESISTOR,CHIP 10K 1/16W (1608)
R1166	1-218-887-11	s	RESISTOR,CHIP 47K 1/16W (1608)
R1167	1-218-882-11	s	RESISTOR, CHIP 30K 1/16W(1608)
R1168	1-218-887-11	s	RESISTOR,CHIP 47K 1/16W (1608)
R1169	1-218-887-11	s	RESISTOR,CHIP 47K 1/16W (1608)
R1170	1-218-823-11	s	RESISTOR,CHIP 100 1/16W (1608)
R1171	1-218-823-11	s	RESISTOR,CHIP 100 1/16W (1608)
R1175	1-216-797-11	s	RESISTOR,CHIP 10 1/16W 1608
R1176	1-216-805-11	s	RESISTOR,CHIP 47 1/16W 1608
R1177	1-218-871-11	s	RESISTOR,CHIP 10K 1/16W (1608)
R1201	1-218-864-11	s	RESISTOR,CHIP 5.1K 1/16W(1608) [for DSR-1800(UC), 1800P]
R1202	1-218-831-11	s	RESISTOR, CHIP 220 1/16W(1608) [for DSR-1800(UC), 1800P]
R1205	1-218-825-11	s	RESISTOR,CHIP 120 1/16W (1608)
R1206	1-218-842-11	s	RESISTOR,CHIP 620 1/16W (1608)
R1207	1-218-867-11	s	RESISTOR,CHIP 6.8K 1/16W(1608)
R1208	1-218-867-11	s	RESISTOR,CHIP 6.8K 1/16W(1608)
R1209	1-218-834-11	s	RESISTOR,CHIP 300 1/16W (1608)
R1210	1-218-834-11	s	RESISTOR,CHIP 300 1/16W (1608)
R1211	1-218-861-11	s	RESISTOR,CHIP 3.9K 1/16W(1608)
R1212	1-218-883-11	s	RESISTOR,CHIP 33K 1/16W (1608)
R1215	1-218-883-11	s	RESISTOR,CHIP 33K 1/16W (1608)
R1216	1-218-859-11	s	RESISTOR,CHIP 3.3K 1/16W(1608)
R1217	1-218-859-11	s	RESISTOR,CHIP 3.3K 1/16W(1608)
R1219	1-218-872-11	s	RESISTOR,CHIP 11K 1/16W (1608)
R1220	1-218-858-11	s	RESISTOR, CHIP 3K 1/16W (1608)
R1251	1-218-863-11	s	RESISTOR,CHIP 4.7K 1/16W(1608)
R1252	1-218-863-11	s	RESISTOR,CHIP 4.7K 1/16W(1608)
R1253	1-218-863-11	s	RESISTOR,CHIP 4.7K 1/16W(1608)
R1254	1-218-863-11	s	RESISTOR,CHIP 4.7K 1/16W(1608)
R1255	1-218-839-11	s	RESISTOR,CHIP 470 1/16W (1608)
R1256	1-218-853-11	s	RESISTOR,CHIP 1.8K 1/16W(1608)
R1257	1-218-875-11	s	RESISTOR,CHIP 15K 1/16W (1608)
R1258	1-218-875-11	s	RESISTOR,CHIP 15K 1/16W (1608)
R1259	1-218-868-11	s	RESISTOR,CHIP 7.5K 1/16W(1608)
R1260	1-218-872-11	s	RESISTOR,CHIP 11K 1/16W (1608)
R1261	1-218-861-11	s	RESISTOR,CHIP 3.9K 1/16W(1608)
R1262	1-218-845-11	s	RESISTOR,CHIP 820 1/16W (1608)
R1263	1-218-871-11	s	RESISTOR,CHIP 10K 1/16W (1608)
R1264	1-218-871-11	s	RESISTOR,CHIP 10K 1/16W (1608)
R1265	1-218-871-11	s	RESISTOR,CHIP 10K 1/16W (1608)
R1266	1-218-887-11	s	RESISTOR,CHIP 47K 1/16W (1608)
R1267	1-218-882-11	s	RESISTOR, CHIP 30K 1/16W(1608)
R1268	1-218-887-11	s	RESISTOR,CHIP 47K 1/16W (1608)
R1269	1-218-887-11	s	RESISTOR,CHIP 47K 1/16W (1608)
R1270	1-218-823-11	s	RESISTOR,CHIP 100 1/16W (1608)
R1271	1-218-823-11	s	RESISTOR,CHIP 100 1/16W (1608)
R1272	1-218-863-11	s	RESISTOR,CHIP 4.7K 1/16W(1608)
R1301	1-218-864-11	s	RESISTOR,CHIP 5.1K 1/16W(1608) [for DSR-1800(UC), 1800P]
R1302	1-218-831-11	s	RESISTOR, CHIP 220 1/16W(1608) [for DSR-1800(UC), 1800P]
R1305	1-218-825-11	s	RESISTOR,CHIP 120 1/16W (1608)
R1306	1-218-842-11	s	RESISTOR,CHIP 620 1/16W (1608)

(SSP-24/24A BOARD (for DSR-1800/P))

Ref. No. or Q'ty	Part No.	SP	Description
R1307	1-218-867-11	s	RESISTOR,CHIP 6.8K 1/16W(1608)
R1308	1-218-867-11	s	RESISTOR,CHIP 6.8K 1/16W(1608)
R1309	1-218-834-11	s	RESISTOR,CHIP 300 1/16W (1608)
R1310	1-218-834-11	s	RESISTOR,CHIP 300 1/16W (1608)
R1311	1-218-861-11	s	RESISTOR,CHIP 3.9K 1/16W(1608)
R1312	1-218-883-11	s	RESISTOR,CHIP 33K 1/16W (1608)
R1315	1-218-883-11	s	RESISTOR,CHIP 33K 1/16W (1608)
R1316	1-218-859-11	s	RESISTOR,CHIP 3.3K 1/16W(1608)
R1317	1-218-859-11	s	RESISTOR,CHIP 3.3K 1/16W(1608)
R1319	1-218-872-11	s	RESISTOR,CHIP 11K 1/16W (1608)
R1320	1-218-858-11	s	RESISTOR, CHIP 3K 1/16W (1608)
R1351	1-218-863-11	s	RESISTOR,CHIP 4.7K 1/16W(1608)
R1352	1-218-863-11	s	RESISTOR,CHIP 4.7K 1/16W(1608)
R1353	1-218-863-11	s	RESISTOR,CHIP 4.7K 1/16W(1608)
R1354	1-218-863-11	s	RESISTOR,CHIP 4.7K 1/16W(1608)
R1355	1-218-839-11	s	RESISTOR,CHIP 470 1/16W (1608)
R1356	1-218-853-11	s	RESISTOR,CHIP 1.8K 1/16W(1608)
R1357	1-218-875-11	s	RESISTOR,CHIP 15K 1/16W (1608)
R1358	1-218-875-11	s	RESISTOR,CHIP 15K 1/16W (1608)
R1359	1-218-868-11	s	RESISTOR,CHIP 7.5K 1/16W(1608)
R1360	1-218-872-11	s	RESISTOR,CHIP 11K 1/16W (1608)
R1361	1-218-861-11	s	RESISTOR,CHIP 3.9K 1/16W(1608)
R1362	1-218-845-11	s	RESISTOR,CHIP 820 1/16W (1608)
R1363	1-218-871-11	s	RESISTOR,CHIP 10K 1/16W (1608)
R1364	1-218-871-11	s	RESISTOR,CHIP 10K 1/16W (1608)
R1365	1-218-871-11	s	RESISTOR,CHIP 10K 1/16W (1608)
R1366	1-218-887-11	s	RESISTOR,CHIP 47K 1/16W (1608)
R1367	1-218-882-11	s	RESISTOR, CHIP 30K 1/16W(1608)
R1368	1-218-887-11	s	RESISTOR,CHIP 47K 1/16W (1608)
R1369	1-218-887-11	s	RESISTOR,CHIP 47K 1/16W (1608)
R1370	1-218-823-11	s	RESISTOR,CHIP 100 1/16W (1608)
R1371	1-218-823-11	s	RESISTOR,CHIP 100 1/16W (1608)
R1375	1-216-797-11	s	RESISTOR,CHIP 10 1/16W 1608
R1376	1-216-805-11	s	RESISTOR,CHIP 47 1/16W 1608
R1401	1-218-864-11	s	RESISTOR,CHIP 5.1K 1/16W(1608) [for DSR-1800(UC), 1800P]
R1402	1-218-831-11	s	RESISTOR, CHIP 220 1/16W(1608) [for DSR-1800(UC), 1800P]
R1405	1-218-825-11	s	RESISTOR,CHIP 120 1/16W (1608)
R1406	1-218-842-11	s	RESISTOR,CHIP 620 1/16W (1608)
R1407	1-218-867-11	s	RESISTOR,CHIP 6.8K 1/16W(1608)
R1408	1-218-867-11	s	RESISTOR,CHIP 6.8K 1/16W(1608)
R1409	1-218-834-11	s	RESISTOR,CHIP 300 1/16W (1608)
R1410	1-218-834-11	s	RESISTOR,CHIP 300 1/16W (1608)
R1411	1-218-861-11	s	RESISTOR,CHIP 3.9K 1/16W(1608)
R1412	1-218-883-11	s	RESISTOR,CHIP 33K 1/16W (1608)
R1415	1-218-883-11	s	RESISTOR,CHIP 33K 1/16W (1608)
R1416	1-218-859-11	s	RESISTOR,CHIP 3.3K 1/16W(1608)
R1417	1-218-859-11	s	RESISTOR,CHIP 3.3K 1/16W(1608)
R1419	1-218-872-11	s	RESISTOR,CHIP 11K 1/16W (1608)
R1420	1-218-858-11	s	RESISTOR, CHIP 3K 1/16W (1608)
R1451	1-218-863-11	s	RESISTOR,CHIP 4.7K 1/16W(1608)
R1452	1-218-863-11	s	RESISTOR,CHIP 4.7K 1/16W(1608)
R1453	1-218-863-11	s	RESISTOR,CHIP 4.7K 1/16W(1608)
R1454	1-218-863-11	s	RESISTOR,CHIP 4.7K 1/16W(1608)
R1455	1-218-839-11	s	RESISTOR,CHIP 470 1/16W (1608)
R1456	1-218-853-11	s	RESISTOR,CHIP 1.8K 1/16W(1608)
R1457	1-218-875-11	s	RESISTOR,CHIP 15K 1/16W (1608)
R1458	1-218-875-11	s	RESISTOR,CHIP 15K 1/16W (1608)

http://getMANUAL.com

(SSP-24/24A BOARD (for DSR-1800/P))

Ref. No. or Q'ty	Part No.	SP	Description
R1459	1-218-868-11	s	RESISTOR,CHIP 7.5K 1/16W(1608)
R1460	1-218-872-11	s	RESISTOR,CHIP 11K 1/16W (1608)
R1461	1-218-861-11	s	RESISTOR,CHIP 3.9K 1/16W(1608)
R1462	1-218-845-11	s	RESISTOR,CHIP 820 1/16W (1608)
R1463	1-218-871-11	s	RESISTOR,CHIP 10K 1/16W (1608)
R1464	1-218-871-11	s	RESISTOR,CHIP 10K 1/16W (1608)
R1465	1-218-871-11	s	RESISTOR,CHIP 10K 1/16W (1608)
R1466	1-218-887-11	s	RESISTOR,CHIP 47K 1/16W (1608)
R1467	1-218-882-11	s	RESISTOR, CHIP 30K 1/16W(1608)
R1468	1-218-887-11	s	RESISTOR,CHIP 47K 1/16W (1608)
R1469	1-218-887-11	s	RESISTOR,CHIP 47K 1/16W (1608)
R1470	1-218-823-11	s	RESISTOR,CHIP 100 1/16W (1608)
R1471	1-218-823-11	s	RESISTOR,CHIP 100 1/16W (1608)
R1501	1-216-797-11	s	RESISTOR,CHIP 10 1/16W 1608
R1502	1-218-880-11	s	RESISTOR,CHIP 24K 1/16W (1608)
R1503	1-218-880-11	s	RESISTOR,CHIP 24K 1/16W (1608)
R1504	1-218-881-11	s	RESISTOR, CHIP 27K 1/16W(1608)
R1505	1-218-881-11	s	RESISTOR, CHIP 27K 1/16W(1608)
R1506	1-218-880-11	s	RESISTOR,CHIP 24K 1/16W (1608)
R1507	1-218-880-11	s	RESISTOR,CHIP 24K 1/16W (1608)
R1508	1-218-881-11	s	RESISTOR, CHIP 27K 1/16W(1608)
R1509	1-218-881-11	s	RESISTOR, CHIP 27K 1/16W(1608)
R1510	1-216-864-11	s	RESISTOR,CHIP 0 1/16W (1608)
R1511	1-218-864-11	s	RESISTOR,CHIP 5.1K 1/16W(1608)
R1514	1-211-981-11	s	RESISTOR,CHIP 33 1/16W (1608)
R1516	1-218-831-11	s	RESISTOR, CHIP 220 1/16W(1608)
R1517	1-218-831-11	s	RESISTOR, CHIP 220 1/16W(1608)
R1518	1-218-831-11	s	RESISTOR, CHIP 220 1/16W(1608)
R1520	1-218-871-11	s	RESISTOR,CHIP 10K 1/16W (1608)
R1521	1-218-871-11	s	RESISTOR,CHIP 10K 1/16W (1608)
R1522	1-211-981-11	s	RESISTOR,CHIP 33 1/16W (1608)
R1523	1-211-981-11	s	RESISTOR,CHIP 33 1/16W (1608)
R1601	1-218-853-11	s	RESISTOR,CHIP 1.8K 1/16W(1608)
R1602	1-218-879-11	s	RESISTOR,CHIP 22K 1/16W (1608)
R1603	1-218-879-11	s	RESISTOR,CHIP 22K 1/16W (1608)
R1604	1-216-864-11	s	RESISTOR,CHIP 0 1/16W (1608)
R1605	1-218-879-11	s	RESISTOR,CHIP 22K 1/16W (1608)
R1606	1-218-879-11	s	RESISTOR,CHIP 22K 1/16W (1608)
R1607	1-218-847-11	s	RESISTOR, CHIP 1K 1/16W (1608)
R1608	1-218-887-11	s	RESISTOR,CHIP 47K 1/16W (1608)
R1609	1-218-887-11	s	RESISTOR,CHIP 47K 1/16W (1608)
R2101	1-216-797-11	s	RESISTOR,CHIP 10 1/16W 1608
R2102	1-218-880-11	s	RESISTOR,CHIP 24K 1/16W (1608)
R2103	1-218-881-11	s	RESISTOR, CHIP 27K 1/16W(1608)
R2104	1-218-880-11	s	RESISTOR,CHIP 24K 1/16W (1608)
R2105	1-218-881-11	s	RESISTOR, CHIP 27K 1/16W(1608)
R2106	1-218-865-11	s	RESISTOR,CHIP 5.6K 1/16W(1608)
R2107	1-218-868-11	s	RESISTOR,CHIP 7.5K 1/16W(1608)
R2108	1-218-875-11	s	RESISTOR,CHIP 15K 1/16W (1608)
R2109	1-218-865-11	s	RESISTOR,CHIP 5.6K 1/16W(1608)
R2110	1-218-836-11	s	RESISTOR,CHIP 360 1/16W (1608)
R2111	1-218-861-11	s	RESISTOR,CHIP 3.9K 1/16W(1608)
R2112	1-218-864-11	s	RESISTOR,CHIP 5.1K 1/16W(1608)
R2113	1-216-801-11	s	RESISTOR,CHIP 22 1/16W (1608)
R2151	1-218-863-11	s	RESISTOR,CHIP 4.7K 1/16W(1608)
R2152	1-218-868-11	s	RESISTOR,CHIP 7.5K 1/16W(1608)
R2153	1-218-875-11	s	RESISTOR,CHIP 15K 1/16W (1608)
R2154	1-218-871-11	s	RESISTOR,CHIP 10K 1/16W (1608) [for DSR-1800(UC), 1800P]

(SSP-24/24A BOARD (for DSR-1800/P))

Ref. No. or Q'ty	Part No.	SP	Description
R2155	1-211-983-11	s	RESISTOR,CHIP 39 1/16W (1608)
R2156	1-218-842-11	s	RESISTOR,CHIP 620 1/16W (1608) [for DSR-1800(UC), 1800P]
R2157	1-218-863-11	s	RESISTOR,CHIP 4.7K 1/16W(1608)
R2158	1-218-834-11	s	RESISTOR,CHIP 300 1/16W (1608)
R2159	1-218-860-11	s	RESISTOR,CHIP 3.6K 1/16W(1608)
R2160	1-218-861-11	s	RESISTOR,CHIP 3.9K 1/16W(1608)
R2161	1-218-872-11	s	RESISTOR,CHIP 11K 1/16W (1608)
R2162	1-218-861-11	s	RESISTOR,CHIP 3.9K 1/16W(1608)
R2163	1-218-872-11	s	RESISTOR,CHIP 11K 1/16W (1608)
R2164	1-211-981-11	s	RESISTOR,CHIP 33 1/16W (1608)
R2165	1-211-981-11	s	RESISTOR,CHIP 33 1/16W (1608)
R2166	1-218-871-11	s	RESISTOR,CHIP 10K 1/16W (1608)
R2167	1-218-871-11	s	RESISTOR,CHIP 10K 1/16W (1608)
R2202	1-218-880-11	s	RESISTOR,CHIP 24K 1/16W (1608)
R2203	1-218-881-11	s	RESISTOR, CHIP 27K 1/16W(1608)
R2204	1-218-880-11	s	RESISTOR,CHIP 24K 1/16W (1608)
R2205	1-218-881-11	s	RESISTOR, CHIP 27K 1/16W(1608)
R2206	1-218-865-11	s	RESISTOR,CHIP 5.6K 1/16W(1608)
R2207	1-218-868-11	s	RESISTOR,CHIP 7.5K 1/16W(1608)
R2208	1-218-875-11	s	RESISTOR,CHIP 15K 1/16W (1608)
R2209	1-218-865-11	s	RESISTOR,CHIP 5.6K 1/16W(1608)
R2210	1-218-836-11	s	RESISTOR,CHIP 360 1/16W (1608)
R2211	1-218-861-11	s	RESISTOR,CHIP 3.9K 1/16W(1608)
R2212	1-218-864-11	s	RESISTOR,CHIP 5.1K 1/16W(1608)
R2251	1-218-863-11	s	RESISTOR,CHIP 4.7K 1/16W(1608)
R2252	1-218-868-11	s	RESISTOR,CHIP 7.5K 1/16W(1608)
R2253	1-218-875-11	s	RESISTOR,CHIP 15K 1/16W (1608)
R2254	1-218-871-11	s	RESISTOR,CHIP 10K 1/16W (1608) [for DSR-1800(UC), 1800P]
R2255	1-211-983-11	s	RESISTOR,CHIP 39 1/16W (1608)
R2256	1-218-842-11	s	RESISTOR,CHIP 620 1/16W (1608) [for DSR-1800(UC), 1800P]
R2257	1-218-863-11	s	RESISTOR,CHIP 4.7K 1/16W(1608)
R2258	1-218-834-11	s	RESISTOR,CHIP 300 1/16W (1608)
R2259	1-218-860-11	s	RESISTOR,CHIP 3.6K 1/16W(1608)
R2260	1-218-861-11	s	RESISTOR,CHIP 3.9K 1/16W(1608)
R2261	1-218-872-11	s	RESISTOR,CHIP 11K 1/16W (1608)
R2262	1-218-861-11	s	RESISTOR,CHIP 3.9K 1/16W(1608)
R2263	1-218-872-11	s	RESISTOR,CHIP 11K 1/16W (1608)
R2264	1-211-981-11	s	RESISTOR,CHIP 33 1/16W (1608)
R2265	1-211-981-11	s	RESISTOR,CHIP 33 1/16W (1608)
R2266	1-218-871-11	s	RESISTOR,CHIP 10K 1/16W (1608)
R2267	1-218-871-11	s	RESISTOR,CHIP 10K 1/16W (1608)
R2301	1-216-797-11	s	RESISTOR,CHIP 10 1/16W 1608
R2302	1-218-880-11	s	RESISTOR,CHIP 24K 1/16W (1608)
R2303	1-218-881-11	s	RESISTOR, CHIP 27K 1/16W(1608)
R2304	1-218-880-11	s	RESISTOR,CHIP 24K 1/16W (1608)
R2305	1-218-881-11	s	RESISTOR, CHIP 27K 1/16W(1608)
R2306	1-218-865-11	s	RESISTOR,CHIP 5.6K 1/16W(1608)
R2307	1-218-868-11	s	RESISTOR,CHIP 7.5K 1/16W(1608)
R2308	1-218-875-11	s	RESISTOR,CHIP 15K 1/16W (1608)
R2309	1-218-865-11	s	RESISTOR,CHIP 5.6K 1/16W(1608)
R2310	1-218-836-11	s	RESISTOR,CHIP 360 1/16W (1608)
R2311	1-218-861-11	s	RESISTOR,CHIP 3.9K 1/16W(1608)
R2312	1-218-864-11	s	RESISTOR,CHIP 5.1K 1/16W(1608)
R2313	1-216-801-11	s	RESISTOR,CHIP 22 1/16W (1608)
R2351	1-218-863-11	s	RESISTOR,CHIP 4.7K 1/16W(1608)
R2352	1-218-868-11	s	RESISTOR,CHIP 7.5K 1/16W(1608)

(SSP-24/24A BOARD (for DSR-1800/P))

Ref. No. or Q'ty	Part No.	SP	Description
R2353	1-218-875-11	s	RESISTOR,CHIP 15K 1/16W (1608)
R2354	1-218-871-11	s	RESISTOR,CHIP 10K 1/16W (1608) [for DSR-1800(UC), 1800P]
R2355	1-211-983-11	s	RESISTOR,CHIP 39 1/16W (1608)
R2356	1-218-842-11	s	RESISTOR,CHIP 620 1/16W (1608) [for DSR-1800(UC), 1800P]
R2357	1-218-863-11	s	RESISTOR,CHIP 4.7K 1/16W(1608)
R2358	1-218-834-11	s	RESISTOR,CHIP 300 1/16W (1608)
R2359	1-218-860-11	s	RESISTOR,CHIP 3.6K 1/16W(1608)
R2360	1-218-861-11	s	RESISTOR,CHIP 3.9K 1/16W(1608)
R2361	1-218-872-11	s	RESISTOR,CHIP 11K 1/16W (1608)
R2362	1-218-861-11	s	RESISTOR,CHIP 3.9K 1/16W(1608)
R2363	1-218-872-11	s	RESISTOR,CHIP 11K 1/16W (1608)
R2364	1-211-981-11	s	RESISTOR,CHIP 33 1/16W (1608)
R2365	1-211-981-11	s	RESISTOR,CHIP 33 1/16W (1608)
R2366	1-218-871-11	s	RESISTOR,CHIP 10K 1/16W (1608)
R2367	1-218-871-11	s	RESISTOR,CHIP 10K 1/16W (1608)
R2402	1-218-880-11	s	RESISTOR,CHIP 24K 1/16W (1608)
R2403	1-218-881-11	s	RESISTOR, CHIP 27K 1/16W(1608)
R2404	1-218-880-11	s	RESISTOR,CHIP 24K 1/16W (1608)
R2405	1-218-881-11	s	RESISTOR, CHIP 27K 1/16W(1608)
R2406	1-218-865-11	s	RESISTOR,CHIP 5.6K 1/16W(1608)
R2407	1-218-868-11	s	RESISTOR,CHIP 7.5K 1/16W(1608)
R2408	1-218-875-11	s	RESISTOR,CHIP 15K 1/16W (1608)
R2409	1-218-865-11	s	RESISTOR,CHIP 5.6K 1/16W(1608)
R2410	1-218-836-11	s	RESISTOR,CHIP 360 1/16W (1608)
R2411	1-218-861-11	s	RESISTOR,CHIP 3.9K 1/16W(1608)
R2412	1-218-864-11	s	RESISTOR,CHIP 5.1K 1/16W(1608)
R2451	1-218-863-11	s	RESISTOR,CHIP 4.7K 1/16W(1608)
R2452	1-218-868-11	s	RESISTOR,CHIP 7.5K 1/16W(1608)
R2453	1-218-875-11	s	RESISTOR,CHIP 15K 1/16W (1608)
R2454	1-218-871-11	s	RESISTOR,CHIP 10K 1/16W (1608) [for DSR-1800(UC), 1800P]
R2455	1-211-983-11	s	RESISTOR,CHIP 39 1/16W (1608)
R2456	1-218-842-11	s	RESISTOR,CHIP 620 1/16W (1608) [for DSR-1800(UC), 1800P]
R2457	1-218-863-11	s	RESISTOR,CHIP 4.7K 1/16W(1608)
R2458	1-218-834-11	s	RESISTOR,CHIP 300 1/16W (1608)
R2459	1-218-860-11	s	RESISTOR,CHIP 3.6K 1/16W(1608)
R2460	1-218-861-11	s	RESISTOR,CHIP 3.9K 1/16W(1608)
R2461	1-218-872-11	s	RESISTOR,CHIP 11K 1/16W (1608)
R2462	1-218-861-11	s	RESISTOR,CHIP 3.9K 1/16W(1608)
R2463	1-218-872-11	s	RESISTOR,CHIP 11K 1/16W (1608)
R2464	1-211-981-11	s	RESISTOR,CHIP 33 1/16W (1608)
R2465	1-211-981-11	s	RESISTOR,CHIP 33 1/16W (1608)
R2466	1-218-871-11	s	RESISTOR,CHIP 10K 1/16W (1608)
R2467	1-218-871-11	s	RESISTOR,CHIP 10K 1/16W (1608)
RB201	1-236-908-11	s	RESISTOR,NETWORK 10K (3216)
RB202	1-236-908-11	s	RESISTOR,NETWORK 10K (3216)
RB203	1-239-409-11	s	RESISTOR NETWORK 47 (1608)
RB204	1-239-409-11	s	RESISTOR NETWORK 47 (1608)
RB400	1-239-308-11	s	RESISTOR ARRAY,CHIP 47K
RB401	1-236-908-11	s	RESISTOR,NETWORK 10K (3216)
RB407	1-239-621-11	s	NETWORK RESISTOR 22 (1608)
RB408	1-239-621-11	s	NETWORK RESISTOR 22 (1608)
RB500	1-236-906-11	s	RESISTOR, NETWORK 15K (1608)
RB501	1-236-907-11	s	RESISTOR BLOCK 100K (1608)
RB502	1-236-907-11	s	RESISTOR BLOCK 100K (1608)
RB503	1-239-308-11	s	RESISTOR ARRAY,CHIP 47K

(SSP-24/24A BOARD (for DSR-1800/P))

Ref. No. or Q'ty	Part No.	SP	Description
RB504	1-239-308-11	s	RESISTOR ARRAY,CHIP 47K
RB505	1-239-621-11	s	NETWORK RESISTOR 22 (1608)
RB506	1-239-621-11	s	NETWORK RESISTOR 22 (1608)
RB507	1-239-621-11	s	NETWORK RESISTOR 22 (1608)
RB508	1-239-621-11	s	NETWORK RESISTOR 22 (1608)
RB509	1-239-308-11	s	RESISTOR ARRAY,CHIP 47K
RB510	1-239-621-11	s	NETWORK RESISTOR 22 (1608)
RB511	1-239-621-11	s	NETWORK RESISTOR 22 (1608)
RB512	1-239-621-11	s	NETWORK RESISTOR 22 (1608)
RB513	1-239-621-11	s	NETWORK RESISTOR 22 (1608)
RB514	1-239-621-11	s	NETWORK RESISTOR 22 (1608)
RB515	1-239-621-11	s	NETWORK RESISTOR 22 (1608)
RB516	1-239-621-11	s	NETWORK RESISTOR 22 (1608)
RB517	1-239-621-11	s	NETWORK RESISTOR 22 (1608)
RB518	1-239-621-11	s	NETWORK RESISTOR 22 (1608)
RB519	1-239-621-11	s	NETWORK RESISTOR 22 (1608)
RB520	1-239-621-11	s	NETWORK RESISTOR 22 (1608)
RB521	1-239-621-11	s	NETWORK RESISTOR 22 (1608)
RB522	1-239-621-11	s	NETWORK RESISTOR 22 (1608)
RB523	1-239-621-11	s	NETWORK RESISTOR 22 (1608)
RB528	1-239-621-11	s	NETWORK RESISTOR 22 (1608)
RB529	1-239-621-11	s	NETWORK RESISTOR 22 (1608)
RB530	1-239-621-11	s	NETWORK RESISTOR 22 (1608)
RB531	1-239-621-11	s	NETWORK RESISTOR 22 (1608)
RB532	1-239-621-11	s	NETWORK RESISTOR 22 (1608)
RB533	1-239-621-11	s	NETWORK RESISTOR 22 (1608)
RB534	1-239-621-11	s	NETWORK RESISTOR 22 (1608)
RB535	1-239-621-11	s	NETWORK RESISTOR 22 (1608)
RB600	1-239-621-11	s	NETWORK RESISTOR 22 (1608)
RB601	1-239-621-11	s	NETWORK RESISTOR 22 (1608)
RB602	1-239-621-11	s	NETWORK RESISTOR 22 (1608)
RB603	1-239-308-11	s	RESISTOR ARRAY,CHIP 47K
RB604	1-239-621-11	s	NETWORK RESISTOR 22 (1608)
RB605	1-239-621-11	s	NETWORK RESISTOR 22 (1608)
RB1101	1-236-907-11	s	RESISTOR BLOCK 100K (1608)
RB1151	1-239-621-11	s	NETWORK RESISTOR 22 (1608)
RB1152	1-239-409-11	s	RESISTOR NETWORK 47 (1608)
RB1203	1-236-907-11	s	RESISTOR BLOCK 100K (1608)
RB1301	1-236-907-11	s	RESISTOR BLOCK 100K (1608)
RB1352	1-239-409-11	s	RESISTOR NETWORK 47 (1608)
RB1501	1-239-621-11	s	NETWORK RESISTOR 22 (1608)
RB1502	1-239-409-11	s	RESISTOR NETWORK 47 (1608)
RB2101	1-239-409-11	s	RESISTOR NETWORK 47 (1608)
RB2301	1-239-409-11	s	RESISTOR NETWORK 47 (1608)
RV1151	1-237-034-11	s	RESISTOR,ADJ,CERMET 2K
RV1251	1-237-034-11	s	RESISTOR,ADJ,CERMET 2K
RV1351	1-237-034-11	s	RESISTOR,ADJ,CERMET 2K
RV1451	1-237-034-11	s	RESISTOR,ADJ,CERMET 2K
RV2101	1-237-034-11	s	RESISTOR,ADJ,CERMET 2K
RV2201	1-237-034-11	s	RESISTOR,ADJ,CERMET 2K
RV2301	1-237-034-11	s	RESISTOR,ADJ,CERMET 2K
RV2401	1-237-034-11	s	RESISTOR,ADJ,CERMET 2K
S400	1-771-881-11	s	SWITCH, DIGITAL (SMD)
S500	1-572-473-11	s	SWITCH, TACTIL
S1101	1-572-042-11	s	SWITCH,SLIDE (2-4-3)
S1201	1-572-042-11	s	SWITCH,SLIDE (2-4-3)
S1301	1-572-042-11	s	SWITCH,SLIDE (2-4-3)
S1401	1-572-042-11	s	SWITCH,SLIDE (2-4-3)

(SSP-24/24A BOARD (for DSR-1800/P))

Ref. No. or Q'ty	Part No.	SP	Description
X200	1-579-996-21	s	VIBRATOR, CERAMIC
X400	1-781-073-21	s	OSCILLATOR, CRYSTAL
X500	1-767-559-11	s	VIBRATOR, CRYSTAL

VPR-71/71P BOARD (for DSR-1800/P)

---

*1: Lot No.073 and higher

Ref. No. or Q'ty	Part No.	SP	Description
1pc	A-8326-502-A	o	MOUNTED CIRCUIT BOARD, VPR-71
11pcs	7-685-646-79	s	SCREW +BVTP 3X8(EP-FE/ZNBK/CM2
2pcs	4-886-821-11	s	SCREW,M3X6 CASE (SILVER)
C200	1-126-392-11	s	CAPACITOR,CHIP ELECT100MF/6.3V
C201	1-126-392-11	s	CAPACITOR,CHIP ELECT100MF/6.3V
C202	1-164-227-11	s	CAPACITOR,CERAMIC 0.022MF/25V
C203	1-164-227-11	s	CAPACITOR,CERAMIC 0.022MF/25V
C204	1-107-826-11	s	CAPACITOR,CHIP CERAMIC 0.1MF
C205	1-162-964-11	s	CAPACITOR,CERAMIC 1000PF/50V B [for DSR-1800(UC), (J)]
C206	1-126-396-11	s	CAPACITOR,ELECT 47MF/16V(CHIP)
C207	1-164-227-11	s	CAPACITOR,CERAMIC 0.022MF/25V
C208	1-164-227-11	s	CAPACITOR,CERAMIC 0.022MF/25V
C209	1-126-392-11	s	CAPACITOR,CHIP ELECT100MF/6.3V
C210	1-126-392-11	s	CAPACITOR,CHIP ELECT100MF/6.3V
C211	1-164-227-11	s	CAPACITOR,CERAMIC 0.022MF/25V
C212	1-164-227-11	s	CAPACITOR,CERAMIC 0.022MF/25V
C213	1-126-396-11	s	CAPACITOR,ELECT 47MF/16V(CHIP)
C214	1-164-227-11	s	CAPACITOR,CERAMIC 0.022MF/25V
C215	1-164-227-11	s	CAPACITOR,CERAMIC 0.022MF/25V
C216	1-164-227-11	s	CAPACITOR,CERAMIC 0.022MF/25V
C217	1-164-227-11	s	CAPACITOR,CERAMIC 0.022MF/25V
C218	1-164-227-11	s	CAPACITOR,CERAMIC 0.022MF/25V
C219	1-126-392-11	s	CAPACITOR,CHIP ELECT100MF/6.3V
C220	1-164-227-11	s	CAPACITOR,CERAMIC 0.022MF/25V
C221	1-164-227-11	s	CAPACITOR,CERAMIC 0.022MF/25V
C222	1-126-396-11	s	CAPACITOR,ELECT 47MF/16V(CHIP)
C223	1-164-227-11	s	CAPACITOR,CERAMIC 0.022MF/25V
C224	1-164-227-11	s	CAPACITOR,CERAMIC 0.022MF/25V
C225	1-126-396-11	s	CAPACITOR,ELECT 47MF/16V(CHIP)
C226	1-126-396-11	s	CAPACITOR,ELECT 47MF/16V(CHIP)
C227	1-162-921-11	s	CAPACITOR,CERAMIC 33PF/50V CH
C228	1-107-826-11	s	CAPACITOR,CHIP CERAMIC 0.1MF
C229	1-164-227-11	s	CAPACITOR,CERAMIC 0.022MF/25V
C230	1-164-227-11	s	CAPACITOR,CERAMIC 0.022MF/25V
C231	1-164-227-11	s	CAPACITOR,CERAMIC 0.022MF/25V
C232	1-164-227-11	s	CAPACITOR,CERAMIC 0.022MF/25V
C233	1-164-227-11	s	CAPACITOR,CERAMIC 0.022MF/25V
C234	1-110-569-11	s	CAPACITOR,TANTALUM 47MF/6.3V
C236	1-110-569-11	s	CAPACITOR,TANTALUM 47MF/6.3V
C237	1-107-826-11	s	CAPACITOR,CHIP CERAMIC 0.1MF
C238	1-104-851-11	s	CAPACITOR,TANTALUM 10MF/10V
C239	1-164-227-11	s	CAPACITOR,CERAMIC 0.022MF/25V
C240	1-104-478-11	s	CAPACITOR TANTALUM 10MF/35V
C241	1-128-416-11	s	CAPACITOR ELECT 100MF/16V(105C
C300	1-164-227-11	s	CAPACITOR,CERAMIC 0.022MF/25V
C301	1-126-392-11	s	CAPACITOR,CHIP ELECT100MF/6.3V
C302	1-162-921-11	s	CAPACITOR,CERAMIC 33PF/50V CH
C303	1-164-227-11	s	CAPACITOR,CERAMIC 0.022MF/25V
C304	1-164-227-11	s	CAPACITOR,CERAMIC 0.022MF/25V
C305	1-164-227-11	s	CAPACITOR,CERAMIC 0.022MF/25V
C306	1-164-227-11	s	CAPACITOR,CERAMIC 0.022MF/25V
C307	1-164-227-11	s	CAPACITOR,CERAMIC 0.022MF/25V
C308	1-164-227-11	s	CAPACITOR,CERAMIC 0.022MF/25V
C309	1-164-227-11	s	CAPACITOR,CERAMIC 0.022MF/25V
C310	1-164-227-11	s	CAPACITOR,CERAMIC 0.022MF/25V
C311	1-164-227-11	s	CAPACITOR,CERAMIC 0.022MF/25V
C312	1-164-227-11	s	CAPACITOR,CERAMIC 0.022MF/25V

(VPR-71/71P BOARD (for DSR-1800/P))

Ref. No. or Q'ty	Part No.	SP	Description
C313	1-164-227-11	s	CAPACITOR,CERAMIC 0.022MF/25V
C317	1-164-227-11	s	CAPACITOR,CERAMIC 0.022MF/25V
C318	1-164-227-11	s	CAPACITOR,CERAMIC 0.022MF/25V
C319	1-126-392-11	s	CAPACITOR,CHIP ELECT100MF/6.3V
C320	1-164-227-11	s	CAPACITOR,CERAMIC 0.022MF/25V
C321	1-164-227-11	s	CAPACITOR,CERAMIC 0.022MF/25V
C322	1-164-227-11	s	CAPACITOR,CERAMIC 0.022MF/25V
C323	1-164-227-11	s	CAPACITOR,CERAMIC 0.022MF/25V
C324	1-164-227-11	s	CAPACITOR,CERAMIC 0.022MF/25V
C325	1-164-227-11	s	CAPACITOR,CERAMIC 0.022MF/25V
C326	1-126-392-11	s	CAPACITOR,CHIP ELECT100MF/6.3V
C327	1-107-826-11	s	CAPACITOR,CHIP CERAMIC 0.1MF
C328	1-164-227-11	s	CAPACITOR,CERAMIC 0.022MF/25V
C329	1-107-826-11	s	CAPACITOR,CHIP CERAMIC 0.1MF
C330	1-164-227-11	s	CAPACITOR,CERAMIC 0.022MF/25V
C331	1-107-826-11	s	CAPACITOR,CHIP CERAMIC 0.1MF
C332	1-164-227-11	s	CAPACITOR,CERAMIC 0.022MF/25V
C333	1-107-826-11	s	CAPACITOR,CHIP CERAMIC 0.1MF
C334	1-164-227-11	s	CAPACITOR,CERAMIC 0.022MF/25V
C335	1-164-227-11	s	CAPACITOR,CERAMIC 0.022MF/25V
C336	1-164-227-11	s	CAPACITOR,CERAMIC 0.022MF/25V
C337	1-162-927-11	s	CAPACITOR,CERAMIC 100PF/50V CH
C338	1-162-927-11	s	CAPACITOR,CERAMIC 100PF/50V CH
C339	1-162-927-11	s	CAPACITOR,CERAMIC 100PF/50V CH
C340	1-126-392-11	s	CAPACITOR,CHIP ELECT100MF/6.3V
C341	1-126-392-11	s	CAPACITOR,CHIP ELECT100MF/6.3V
C342	1-164-227-11	s	CAPACITOR,CERAMIC 0.022MF/25V
C343	1-164-227-11	s	CAPACITOR,CERAMIC 0.022MF/25V
C344	1-164-227-11	s	CAPACITOR,CERAMIC 0.022MF/25V
C345	1-164-227-11	s	CAPACITOR,CERAMIC 0.022MF/25V
C346	1-164-227-11	s	CAPACITOR,CERAMIC 0.022MF/25V
C347	1-164-227-11	s	CAPACITOR,CERAMIC 0.022MF/25V
C348	1-164-227-11	s	CAPACITOR,CERAMIC 0.022MF/25V
C349	1-164-227-11	s	CAPACITOR,CERAMIC 0.022MF/25V
C351	1-107-826-11	s	CAPACITOR,CHIP CERAMIC 0.1MF
C352	1-126-392-11	s	CAPACITOR,CHIP ELECT100MF/6.3V
C400	1-126-392-11	s	CAPACITOR,CHIP ELECT100MF/6.3V
C401	1-126-392-11	s	CAPACITOR,CHIP ELECT100MF/6.3V
C402	1-164-227-11	s	CAPACITOR,CERAMIC 0.022MF/25V
C403	1-164-227-11	s	CAPACITOR,CERAMIC 0.022MF/25V
C404	1-126-396-11	s	CAPACITOR,ELECT 47MF/16V(CHIP)
C405	1-162-926-11	s	CAPACITOR,CERAMIC 82PF/50V CH
C406	1-164-227-11	s	CAPACITOR,CERAMIC 0.022MF/25V
C407	1-164-227-11	s	CAPACITOR,CERAMIC 0.022MF/25V
C408	1-164-227-11	s	CAPACITOR,CERAMIC 0.022MF/25V
C409	1-162-919-11	s	CAPACITOR,CERAMIC 22PF/50V CH
C410	1-162-925-11	s	CAPACITOR,CERAMIC 68PF/50V CH [for DSR-1800(UC), (J)]
C410	1-162-919-11	s	CAPACITOR,CERAMIC 22PF/50V CH [for DSR-1800P]
C411	1-104-851-11	s	CAPACITOR,TANTALUM 10MF/10V
C412	1-107-826-11	s	CAPACITOR,CHIP CERAMIC 0.1MF
C413	1-164-227-11	s	CAPACITOR,CERAMIC 0.022MF/25V
C414	1-164-227-11	s	CAPACITOR,CERAMIC 0.022MF/25V
C415	1-164-227-11	s	CAPACITOR,CERAMIC 0.022MF/25V
C416	1-126-392-11	s	CAPACITOR,CHIP ELECT100MF/6.3V
C417	1-126-392-11	s	CAPACITOR,CHIP ELECT100MF/6.3V
C418	1-162-959-11	s	CAPACITOR,CERAMIC 330PF/50V SL [for DSR-1800(UC), (J)]

(VPR-71/71P BOARD (for DSR-1800/P))

Ref. No. or Q'ty	Part No.	SP	Description
C418	1-164-230-11	s	CAPACITOR,CERAMIC 220PF/50V [for DSR-1800P]
C419	1-162-921-11	s	CAPACITOR,CERAMIC 33PF/50V CH
C420	1-164-217-11	s	CAPACITOR,CERAMIC 150PF/50V CH
C421	1-164-227-11	s	CAPACITOR,CERAMIC 0.022MF/25V
C422	1-164-227-11	s	CAPACITOR,CERAMIC 0.022MF/25V
C423	1-107-826-11	s	CAPACITOR,CHIP CERAMIC 0.1MF
C424	1-107-826-11	s	CAPACITOR,CHIP CERAMIC 0.1MF
C425	1-164-227-11	s	CAPACITOR,CERAMIC 0.022MF/25V
C426	1-126-392-11	s	CAPACITOR,CHIP ELECT100MF/6.3V
C427	1-164-227-11	s	CAPACITOR,CERAMIC 0.022MF/25V
C428	1-164-227-11	s	CAPACITOR,CERAMIC 0.022MF/25V
C429	1-164-227-11	s	CAPACITOR,CERAMIC 0.022MF/25V
C430	1-164-227-11	s	CAPACITOR,CERAMIC 0.022MF/25V
C431	1-164-227-11	s	CAPACITOR,CERAMIC 0.022MF/25V
C432	1-164-315-11	s	CAPACITOR,CERAMIC 470PF/50V CH
C433	1-162-968-11	s	CAPACITOR,CERAMIC 4700PF/50V B
C434	1-162-968-11	s	CAPACITOR,CERAMIC 4700PF/50V B
C435	1-164-227-11	s	CAPACITOR,CERAMIC 0.022MF/25V
C436	1-164-227-11	s	CAPACITOR,CERAMIC 0.022MF/25V
C437	1-164-227-11	s	CAPACITOR,CERAMIC 0.022MF/25V
C438	1-126-392-11	s	CAPACITOR,CHIP ELECT100MF/6.3V
C439	1-164-217-11	s	CAPACITOR,CERAMIC 150PF/50V CH
C440	1-164-227-11	s	CAPACITOR,CERAMIC 0.022MF/25V
C441	1-107-826-11	s	CAPACITOR,CHIP CERAMIC 0.1MF
C442	1-162-919-11	s	CAPACITOR,CERAMIC 22PF/50V CH
C443	1-162-921-11	s	CAPACITOR,CERAMIC 33PF/50V CH
C444	1-126-392-11	s	CAPACITOR,CHIP ELECT100MF/6.3V
C445	1-164-227-11	s	CAPACITOR,CERAMIC 0.022MF/25V
C446	1-126-392-11	s	CAPACITOR,CHIP ELECT100MF/6.3V
C447	1-164-217-11	s	CAPACITOR,CERAMIC 150PF/50V CH
C448	1-164-227-11	s	CAPACITOR,CERAMIC 0.022MF/25V
C449	1-107-826-11	s	CAPACITOR,CHIP CERAMIC 0.1MF
C450	1-107-826-11	s	CAPACITOR,CHIP CERAMIC 0.1MF
C451	1-162-922-11	s	CAPACITOR,CERAMIC 39PF/50V CH
C452	1-164-227-11	s	CAPACITOR,CERAMIC 0.022MF/25V
C453	1-126-392-11	s	CAPACITOR,CHIP ELECT100MF/6.3V
C454	1-162-959-11	s	CAPACITOR,CERAMIC 330PF/50V SL
C455	1-164-227-11	s	CAPACITOR,CERAMIC 0.022MF/25V
C456	1-126-392-11	s	CAPACITOR,CHIP ELECT100MF/6.3V
C457	1-164-227-11	s	CAPACITOR,CERAMIC 0.022MF/25V
C458	1-162-968-11	s	CAPACITOR,CERAMIC 4700PF/50V B
C459	1-126-392-11	s	CAPACITOR,CHIP ELECT100MF/6.3V
C460	1-164-227-11	s	CAPACITOR,CERAMIC 0.022MF/25V
C461	1-164-227-11	s	CAPACITOR,CERAMIC 0.022MF/25V
C462	1-164-227-11	s	CAPACITOR,CERAMIC 0.022MF/25V
C463	1-164-227-11	s	CAPACITOR,CERAMIC 0.022MF/25V
C500	1-164-227-11	s	CAPACITOR,CERAMIC 0.022MF/25V
C501	1-164-227-11	s	CAPACITOR,CERAMIC 0.022MF/25V
C502	1-126-396-11	s	CAPACITOR,ELECT 47MF/16V(CHIP)
C503	1-126-392-11	s	CAPACITOR,CHIP ELECT100MF/6.3V
C504	1-126-392-11	s	CAPACITOR,CHIP ELECT100MF/6.3V
C505	1-126-392-11	s	CAPACITOR,CHIP ELECT100MF/6.3V
C506	1-126-392-11	s	CAPACITOR,CHIP ELECT100MF/6.3V
C507	1-126-392-11	s	CAPACITOR,CHIP ELECT100MF/6.3V
C508	1-164-227-11	s	CAPACITOR,CERAMIC 0.022MF/25V
C509	1-164-227-11	s	CAPACITOR,CERAMIC 0.022MF/25V
C510	1-164-227-11	s	CAPACITOR,CERAMIC 0.022MF/25V
C511	1-164-227-11	s	CAPACITOR,CERAMIC 0.022MF/25V

(VPR-71/71P BOARD (for DSR-1800/P))

Ref. No. or Q'ty	Part No.	SP	Description
C512	1-164-227-11	s	CAPACITOR,CERAMIC 0.022MF/25V
C513	1-164-227-11	s	CAPACITOR,CERAMIC 0.022MF/25V
C514	1-162-920-11	s	CAPACITOR,CERAMIC 27PF/50V CH
C515	1-162-921-11	s	CAPACITOR,CERAMIC 33PF/50V CH
C516	1-162-921-11	s	CAPACITOR,CERAMIC 33PF/50V CH
C519	1-162-921-11	s	CAPACITOR,CERAMIC 33PF/50V CH
C520	1-162-921-11	s	CAPACITOR,CERAMIC 33PF/50V CH
C521	1-164-227-11	s	CAPACITOR,CERAMIC 0.022MF/25V
C522	1-164-227-11	s	CAPACITOR,CERAMIC 0.022MF/25V
C525	1-164-227-11	s	CAPACITOR,CERAMIC 0.022MF/25V
C526	1-164-227-11	s	CAPACITOR,CERAMIC 0.022MF/25V
C527	1-126-392-11	s	CAPACITOR,CHIP ELECT100MF/6.3V
C528	1-126-392-11	s	CAPACITOR,CHIP ELECT100MF/6.3V
C529	1-107-826-11	s	CAPACITOR,CHIP CERAMIC 0.1MF
C530	1-162-964-11	s	CAPACITOR,CERAMIC 1000PF/50V B
C531	1-164-227-11	s	CAPACITOR,CERAMIC 0.022MF/25V
C532	1-164-227-11	s	CAPACITOR,CERAMIC 0.022MF/25V
C533	1-164-227-11	s	CAPACITOR,CERAMIC 0.022MF/25V
C534	1-165-176-11	s	CAPACITOR,CERAMIC 47000PF/16V
C535	1-162-917-11	s	CAPACITOR,CERAMIC 15PF/50V CH
C536	1-164-227-11	s	CAPACITOR,CERAMIC 0.022MF/25V
C537	1-164-227-11	s	CAPACITOR,CERAMIC 0.022MF/25V
C538	1-164-227-11	s	CAPACITOR,CERAMIC 0.022MF/25V
C539	1-164-227-11	s	CAPACITOR,CERAMIC 0.022MF/25V
C540	1-126-391-11	s	CAPACITOR ELECT 47MF/6.3V(105)
C541	1-126-391-11	s	CAPACITOR ELECT 47MF/6.3V(105)
C542	1-126-391-11	s	CAPACITOR ELECT 47MF/6.3V(105)
C543	1-126-391-11	s	CAPACITOR ELECT 47MF/6.3V(105)
C546	1-107-826-11	s	CAPACITOR,CHIP CERAMIC 0.1MF
C547	1-107-826-11	s	CAPACITOR,CHIP CERAMIC 0.1MF
C548	1-126-392-11	s	CAPACITOR,CHIP ELECT100MF/6.3V
C549	1-164-227-11	s	CAPACITOR,CERAMIC 0.022MF/25V
C550	1-107-826-11	s	CAPACITOR,CHIP CERAMIC 0.1MF
C551	1-107-826-11	s	CAPACITOR,CHIP CERAMIC 0.1MF
C552	1-107-826-11	s	CAPACITOR,CHIP CERAMIC 0.1MF
C554	1-107-826-11	s	CAPACITOR,CHIP CERAMIC 0.1MF
C555	1-126-391-11	s	CAPACITOR ELECT 47MF/6.3V(105)
C556	1-107-826-11	s	CAPACITOR,CHIP CERAMIC 0.1MF
C557	1-126-391-11	s	CAPACITOR ELECT 47MF/6.3V(105)
C558	1-126-391-11	s	CAPACITOR ELECT 47MF/6.3V(105)
C559	1-107-826-11	s	CAPACITOR,CHIP CERAMIC 0.1MF
C560	1-164-227-11	s	CAPACITOR,CERAMIC 0.022MF/25V
C561	1-107-826-11	s	CAPACITOR,CHIP CERAMIC 0.1MF
C562	1-162-915-11	s	CAPACITOR,CERAMIC 10PF/50V CH
C563	1-107-826-11	s	CAPACITOR,CHIP CERAMIC 0.1MF
C564	1-107-826-11	s	CAPACITOR,CHIP CERAMIC 0.1MF
C565	1-107-826-11	s	CAPACITOR,CHIP CERAMIC 0.1MF
C566	1-107-826-11	s	CAPACITOR,CHIP CERAMIC 0.1MF
C567	1-107-826-11	s	CAPACITOR,CHIP CERAMIC 0.1MF
C568	1-107-826-11	s	CAPACITOR,CHIP CERAMIC 0.1MF
C569	1-107-826-11	s	CAPACITOR,CHIP CERAMIC 0.1MF
C570	1-107-826-11	s	CAPACITOR,CHIP CERAMIC 0.1MF
C572	1-107-826-11	s	CAPACITOR,CHIP CERAMIC 0.1MF
C573	1-107-826-11	s	CAPACITOR,CHIP CERAMIC 0.1MF
C574	1-107-826-11	s	CAPACITOR,CHIP CERAMIC 0.1MF
C575	1-126-392-11	s	CAPACITOR,CHIP ELECT100MF/6.3V
C576	1-126-392-11	s	CAPACITOR,CHIP ELECT100MF/6.3V
C577	1-107-826-11	s	CAPACITOR,CHIP CERAMIC 0.1MF
C578	1-107-826-11	s	CAPACITOR,CHIP CERAMIC 0.1MF

(VPR-71/71P BOARD (for DSR-1800/P))

Ref. No. or Q'ty	Part No.	SP	Description
C579	1-107-826-11	s	CAPACITOR,CHIP CERAMIC 0.1MF
C580	1-107-826-11	s	CAPACITOR,CHIP CERAMIC 0.1MF
C581	1-107-826-11	s	CAPACITOR,CHIP CERAMIC 0.1MF
C582	1-107-826-11	s	CAPACITOR,CHIP CERAMIC 0.1MF
C583	1-107-826-11	s	CAPACITOR,CHIP CERAMIC 0.1MF
C586	1-164-227-11	s	CAPACITOR,CERAMIC 0.022MF/25V
C587	1-164-227-11	s	CAPACITOR,CERAMIC 0.022MF/25V
C600	1-107-826-11	s	CAPACITOR,CHIP CERAMIC 0.1MF
C601	1-107-826-11	s	CAPACITOR,CHIP CERAMIC 0.1MF
C602	1-107-826-11	s	CAPACITOR,CHIP CERAMIC 0.1MF
C603	1-107-826-11	s	CAPACITOR,CHIP CERAMIC 0.1MF
C604	1-107-826-11	s	CAPACITOR,CHIP CERAMIC 0.1MF
C605	1-126-392-11	s	CAPACITOR,CHIP ELECT100MF/6.3V
C607	1-126-401-11	s	CAPACITOR, ELECT 1MF/50V(CHIP)
C608	1-107-826-11	s	CAPACITOR,CHIP CERAMIC 0.1MF
C609	1-115-467-11	s	CAPACITOR CERAMIC 0.22MF/10V B
C610	1-107-826-11	s	CAPACITOR,CHIP CERAMIC 0.1MF
C611	1-162-964-11	s	CAPACITOR,CERAMIC 1000PF/50V B
C612	1-107-826-11	s	CAPACITOR,CHIP CERAMIC 0.1MF
C613	1-107-826-11	s	CAPACITOR,CHIP CERAMIC 0.1MF
C614	1-115-467-11	s	CAPACITOR CERAMIC 0.22MF/10V B
C615	1-115-467-11	s	CAPACITOR CERAMIC 0.22MF/10V B
C616	1-115-414-11	s	CAPACITOR,CHIP CERAMIC 820PF
C617	1-115-467-11	s	CAPACITOR CERAMIC 0.22MF/10V B
C618	1-107-826-11	s	CAPACITOR,CHIP CERAMIC 0.1MF
C619	1-162-927-11	s	CAPACITOR,CERAMIC 100PF/50V CH
C620	1-115-467-11	s	CAPACITOR CERAMIC 0.22MF/10V B
C621	1-162-964-11	s	CAPACITOR,CERAMIC 1000PF/50V B
C622	1-107-826-11	s	CAPACITOR,CHIP CERAMIC 0.1MF
C623	1-107-826-11	s	CAPACITOR,CHIP CERAMIC 0.1MF
C624	1-107-826-11	s	CAPACITOR,CHIP CERAMIC 0.1MF
C625	1-107-826-11	s	CAPACITOR,CHIP CERAMIC 0.1MF
C626	1-126-392-11	s	CAPACITOR,CHIP ELECT100MF/6.3V
C627	1-126-392-11	s	CAPACITOR,CHIP ELECT100MF/6.3V
C628	1-162-926-11	s	CAPACITOR,CERAMIC 82PF/50V CH
C629	1-164-392-11	s	CAPACITOR CERAMIC 390PF/50V CH
C630	1-162-964-11	s	CAPACITOR,CERAMIC 1000PF/50V B
C631	1-126-392-11	s	CAPACITOR,CHIP ELECT100MF/6.3V
C632	1-164-227-11	s	CAPACITOR,CERAMIC 0.022MF/25V
C633	1-126-394-11	s	CAPACITOR,ELECT 10MF/16V(CHIP)
C634	1-107-826-11	s	CAPACITOR,CHIP CERAMIC 0.1MF
C635	1-126-391-11	s	CAPACITOR ELECT 47MF/6.3V(105)
C636	1-162-970-11	s	CAPACITOR CERAMIC 0.01MF/25V B
C637	1-126-401-11	s	CAPACITOR, ELECT 1MF/50V(CHIP)
C638	1-126-401-11	s	CAPACITOR, ELECT 1MF/50V(CHIP)
C640	1-162-970-11	s	CAPACITOR CERAMIC 0.01MF/25V B
C641	1-162-970-11	s	CAPACITOR CERAMIC 0.01MF/25V B
C642	1-164-315-11	s	CAPACITOR,CERAMIC 470PF/50V CH
C643	1-162-967-11	s	CAPACITOR,CERAMIC 3300PF/50V B
C644	1-162-967-11	s	CAPACITOR,CERAMIC 3300PF/50V B
C645	1-104-912-11	s	CAPACITOR TANTALUM 3.3MF/16V
C646	1-162-908-11	s	CAPACITOR,CERAMIC 3PF/50V 1608
C647	1-162-920-11	s	CAPACITOR,CERAMIC 27PF/50V CH
C648	1-107-826-11	s	CAPACITOR,CHIP CERAMIC 0.1MF
C649	1-162-970-11	s	CAPACITOR CERAMIC 0.01MF/25V B
C650	1-162-927-11	s	CAPACITOR,CERAMIC 100PF/50V CH
C651	1-107-826-11	s	CAPACITOR,CHIP CERAMIC 0.1MF
C652	1-126-391-11	s	CAPACITOR ELECT 47MF/6.3V(105)
C653	1-164-227-11	s	CAPACITOR,CERAMIC 0.022MF/25V

(VPR-71/71P BOARD (for DSR-1800/P))

Ref. No. or Q'ty	Part No.	SP	Description
C654	1-162-908-11	s	CAPACITOR,CERAMIC 3PF/50V 1608
C700	1-107-826-11	s	CAPACITOR,CHIP CERAMIC 0.1MF
C701	1-164-227-11	s	CAPACITOR,CERAMIC 0.022MF/25V
C702	1-162-919-11	s	CAPACITOR,CERAMIC 22PF/50V CH
C703	1-164-227-11	s	CAPACITOR,CERAMIC 0.022MF/25V
C704	1-164-227-11	s	CAPACITOR,CERAMIC 0.022MF/25V
C705	1-164-227-11	s	CAPACITOR,CERAMIC 0.022MF/25V
C706	1-107-826-11	s	CAPACITOR,CHIP CERAMIC 0.1MF
C707	1-107-826-11	s	CAPACITOR,CHIP CERAMIC 0.1MF
C708	1-162-964-11	s	CAPACITOR,CERAMIC 1000PF/50V B
C709	1-162-964-11	s	CAPACITOR,CERAMIC 1000PF/50V B
C710	1-107-826-11	s	CAPACITOR,CHIP CERAMIC 0.1MF
C711	1-107-826-11	s	CAPACITOR,CHIP CERAMIC 0.1MF
C712	1-164-227-11	s	CAPACITOR,CERAMIC 0.022MF/25V
C713	1-164-227-11	s	CAPACITOR,CERAMIC 0.022MF/25V
C714	1-164-227-11	s	CAPACITOR,CERAMIC 0.022MF/25V
C715	1-164-227-11	s	CAPACITOR,CERAMIC 0.022MF/25V
C716	1-107-826-11	s	CAPACITOR,CHIP CERAMIC 0.1MF
C717	1-162-964-11	s	CAPACITOR,CERAMIC 1000PF/50V B
C718	1-164-227-11	s	CAPACITOR,CERAMIC 0.022MF/25V
C719	1-126-392-11	s	CAPACITOR,CHIP ELECT100MF/6.3V
C720	1-107-826-11	s	CAPACITOR,CHIP CERAMIC 0.1MF
C721	1-164-227-11	s	CAPACITOR,CERAMIC 0.022MF/25V
C722	1-164-227-11	s	CAPACITOR,CERAMIC 0.022MF/25V
C723	1-164-227-11	s	CAPACITOR,CERAMIC 0.022MF/25V
C724	1-164-227-11	s	CAPACITOR,CERAMIC 0.022MF/25V
C725	1-126-391-11	s	CAPACITOR ELECT 47MF/6.3V(105)
C726	1-126-391-11	s	CAPACITOR ELECT 47MF/6.3V(105)
C727	1-164-227-11	s	CAPACITOR,CERAMIC 0.022MF/25V
C728	1-164-227-11	s	CAPACITOR,CERAMIC 0.022MF/25V
C729	1-164-227-11	s	CAPACITOR,CERAMIC 0.022MF/25V
C730	1-164-227-11	s	CAPACITOR,CERAMIC 0.022MF/25V
C731	1-164-227-11	s	CAPACITOR,CERAMIC 0.022MF/25V
C732	1-164-227-11	s	CAPACITOR,CERAMIC 0.022MF/25V
C733	1-126-392-11	s	CAPACITOR,CHIP ELECT100MF/6.3V
C734	1-126-392-11	s	CAPACITOR,CHIP ELECT100MF/6.3V
C735	1-107-826-11	s	CAPACITOR,CHIP CERAMIC 0.1MF
C736	1-164-227-11	s	CAPACITOR,CERAMIC 0.022MF/25V
C737	1-126-392-11	s	CAPACITOR,CHIP ELECT100MF/6.3V
C738	1-126-391-11	s	CAPACITOR ELECT 47MF/6.3V(105)
C739	1-164-227-11	s	CAPACITOR,CERAMIC 0.022MF/25V
C740	1-107-826-11	s	CAPACITOR,CHIP CERAMIC 0.1MF
C741	1-164-227-11	s	CAPACITOR,CERAMIC 0.022MF/25V
C742	1-164-227-11	s	CAPACITOR,CERAMIC 0.022MF/25V
C743	1-164-227-11	s	CAPACITOR,CERAMIC 0.022MF/25V
C744	1-126-392-11	s	CAPACITOR,CHIP ELECT100MF/6.3V
C745	1-164-227-11	s	CAPACITOR,CERAMIC 0.022MF/25V
C746	1-164-227-11	s	CAPACITOR,CERAMIC 0.022MF/25V
C747	1-164-227-11	s	CAPACITOR,CERAMIC 0.022MF/25V
C748	1-164-227-11	s	CAPACITOR,CERAMIC 0.022MF/25V
C749	1-135-210-11	s	CAPACITOR,TANTALUM 4.7MF/10V
C750	1-164-227-11	s	CAPACITOR,CERAMIC 0.022MF/25V
C751	1-126-392-11	s	CAPACITOR,CHIP ELECT100MF/6.3V
C752	1-126-396-11	s	CAPACITOR,ELECT 47MF/16V(CHIP)
C753	1-164-227-11	s	CAPACITOR,CERAMIC 0.022MF/25V
C754	1-164-227-11	s	CAPACITOR,CERAMIC 0.022MF/25V
C755	1-162-917-11	s	CAPACITOR,CERAMIC 15PF/50V CH
C756	1-162-923-11	s	CAPACITOR,CERAMIC 47PF/50V CH
C757	1-162-921-11	s	CAPACITOR,CERAMIC 33PF/50V CH

(VPR-71/71P BOARD (for DSR-1800/P))

Ref. No. or Q'ty	Part No.	SP	Description
C758	1-162-919-11	s	CAPACITOR,CERAMIC 22PF/50V CH [for DSR-1800(UC), (J)]
C758	1-162-920-11	s	CAPACITOR,CERAMIC 27PF/50V CH [for DSR-1800P]
C760	1-164-227-11	s	CAPACITOR,CERAMIC 0.022MF/25V
C761	1-164-227-11	s	CAPACITOR,CERAMIC 0.022MF/25V
C762	1-164-227-11	s	CAPACITOR,CERAMIC 0.022MF/25V
C763	1-162-917-11	s	CAPACITOR,CERAMIC 15PF/50V CH
C764	1-164-227-11	s	CAPACITOR,CERAMIC 0.022MF/25V
C765	1-162-923-11	s	CAPACITOR,CERAMIC 47PF/50V CH
C766	1-162-921-11	s	CAPACITOR,CERAMIC 33PF/50V CH
C767	1-162-919-11	s	CAPACITOR,CERAMIC 22PF/50V CH [for DSR-1800(UC), (J)]
C767	1-162-920-11	s	CAPACITOR,CERAMIC 27PF/50V CH [for DSR-1800P]
C769	1-107-826-11	s	CAPACITOR,CHIP CERAMIC 0.1MF
C770	1-107-826-11	s	CAPACITOR,CHIP CERAMIC 0.1MF
C771	1-107-826-11	s	CAPACITOR,CHIP CERAMIC 0.1MF
C772	1-162-964-11	s	CAPACITOR,CERAMIC 1000PF/50V B
C773	1-107-826-11	s	CAPACITOR,CHIP CERAMIC 0.1MF
C774	1-126-392-11	s	CAPACITOR,CHIP ELECT100MF/6.3V
C775	1-126-392-11	s	CAPACITOR,CHIP ELECT100MF/6.3V
C776	1-107-826-11	s	CAPACITOR,CHIP CERAMIC 0.1MF
C777	1-126-392-11	s	CAPACITOR,CHIP ELECT100MF/6.3V
C778	1-164-227-11	s	CAPACITOR,CERAMIC 0.022MF/25V
C779	1-164-227-11	s	CAPACITOR,CERAMIC 0.022MF/25V
C800	1-126-392-11	s	CAPACITOR,CHIP ELECT100MF/6.3V
C801	1-126-392-11	s	CAPACITOR,CHIP ELECT100MF/6.3V
C802	1-162-915-11	s	CAPACITOR,CERAMIC 10PF/50V CH
C803	1-164-227-11	s	CAPACITOR,CERAMIC 0.022MF/25V
C804	1-164-227-11	s	CAPACITOR,CERAMIC 0.022MF/25V
C805	1-164-227-11	s	CAPACITOR,CERAMIC 0.022MF/25V
C806	1-164-227-11	s	CAPACITOR,CERAMIC 0.022MF/25V
C807	1-164-227-11	s	CAPACITOR,CERAMIC 0.022MF/25V
C808	1-162-927-11	s	CAPACITOR,CERAMIC 100PF/50V CH
C809	1-164-227-11	s	CAPACITOR,CERAMIC 0.022MF/25V
C810	1-164-227-11	s	CAPACITOR,CERAMIC 0.022MF/25V
C811	1-135-177-21	s	CAPACITOR TANTALUM 1MF/25V
C812	1-135-177-21	s	CAPACITOR TANTALUM 1MF/25V
C813	1-164-383-11	s	CAPACITOR,CERAMIC 110PF/50V CH [for DSR-1800(UC), (J)]
C813	1-164-217-11	s	CAPACITOR,CERAMIC 150PF/50V CH [for DSR-1800P]
C814	1-135-177-21	s	CAPACITOR TANTALUM 1MF/25V
C815	1-135-177-21	s	CAPACITOR TANTALUM 1MF/25V
C816	1-164-227-11	s	CAPACITOR,CERAMIC 0.022MF/25V
C817	1-164-227-11	s	CAPACITOR,CERAMIC 0.022MF/25V
C818	1-126-392-11	s	CAPACITOR,CHIP ELECT100MF/6.3V
C819	1-164-227-11	s	CAPACITOR,CERAMIC 0.022MF/25V
C820	1-164-227-11	s	CAPACITOR,CERAMIC 0.022MF/25V
C821	1-164-227-11	s	CAPACITOR,CERAMIC 0.022MF/25V
C822	1-165-176-11	s	CAPACITOR,CERAMIC 47000PF/16V
C823	1-165-176-11	s	CAPACITOR,CERAMIC 47000PF/16V
C824	1-164-227-11	s	CAPACITOR,CERAMIC 0.022MF/25V
C825	1-162-917-11	s	CAPACITOR,CERAMIC 15PF/50V CH
C826	1-162-915-11	s	CAPACITOR,CERAMIC 10PF/50V CH
C827	1-164-230-11	s	CAPACITOR,CERAMIC 220PF/50V
C828	1-164-227-11	s	CAPACITOR,CERAMIC 0.022MF/25V
C829	1-126-392-11	s	CAPACITOR,CHIP ELECT100MF/6.3V
C830	1-164-227-11	s	CAPACITOR,CERAMIC 0.022MF/25V

(VPR-71/71P BOARD (for DSR-1800/P))

Ref. No. or Q'ty	Part No.	SP	Description
C831	1-164-227-11	s	CAPACITOR,CERAMIC 0.022MF/25V
C832	1-164-227-11	s	CAPACITOR,CERAMIC 0.022MF/25V
C833	1-126-396-11	s	CAPACITOR,ELECT 47MF/16V(CHIP)
C834	1-164-227-11	s	CAPACITOR,CERAMIC 0.022MF/25V
C835	1-164-227-11	s	CAPACITOR,CERAMIC 0.022MF/25V
C836	1-164-227-11	s	CAPACITOR,CERAMIC 0.022MF/25V
C837	1-164-227-11	s	CAPACITOR,CERAMIC 0.022MF/25V
C838	1-164-227-11	s	CAPACITOR,CERAMIC 0.022MF/25V
C839	1-164-227-11	s	CAPACITOR,CERAMIC 0.022MF/25V
C840	1-162-923-11	s	CAPACITOR,CERAMIC 47PF/50V CH
C841	1-162-920-11	s	CAPACITOR,CERAMIC 27PF/50V CH [for DSR-1800(UC), (J)]
C841	1-162-921-11	s	CAPACITOR,CERAMIC 33PF/50V CH [for DSR-1800P]
C842	1-162-920-11	s	CAPACITOR,CERAMIC 27PF/50V CH [for DSR-1800(UC), (J)]
C842	1-162-921-11	s	CAPACITOR,CERAMIC 33PF/50V CH [for DSR-1800P]
C843	1-162-915-11	s	CAPACITOR,CERAMIC 10PF/50V CH
C844	1-162-924-11	s	CAPACITOR,CERAMIC 56PF/50V CH [for DSR-1800(UC), (J)]
C844	1-162-925-11	s	CAPACITOR,CERAMIC 68PF/50V CH [for DSR-1800P]
C845	1-162-924-11	s	CAPACITOR,CERAMIC 56PF/50V CH [for DSR-1800(UC), (J)]
C845	1-162-925-11	s	CAPACITOR,CERAMIC 68PF/50V CH [for DSR-1800P]
C846	1-162-920-11	s	CAPACITOR,CERAMIC 27PF/50V CH [for DSR-1800(UC), (J)]
C846	1-162-921-11	s	CAPACITOR,CERAMIC 33PF/50V CH [for DSR-1800P]
C847	1-162-920-11	s	CAPACITOR,CERAMIC 27PF/50V CH [for DSR-1800(UC), (J)]
C847	1-162-921-11	s	CAPACITOR,CERAMIC 33PF/50V CH [for DSR-1800P]
C848	1-164-227-11	s	CAPACITOR,CERAMIC 0.022MF/25V
C849	1-164-227-11	s	CAPACITOR,CERAMIC 0.022MF/25V
C850	1-164-227-11	s	CAPACITOR,CERAMIC 0.022MF/25V
C851	1-164-227-11	s	CAPACITOR,CERAMIC 0.022MF/25V
C852	1-162-912-11	s	CAPACITOR,CERAMIC 7PF/50V 1608 [for DSR-1800(UC), (J)]
C852	1-162-909-11	s	CAPACITOR,CERAMIC 4PF/50V CH [for DSR-1800P]
C853	1-162-915-11	s	CAPACITOR,CERAMIC 10PF/50V CH [for DSR-1800P]
C854	1-107-826-11	s	CAPACITOR,CHIP CERAMIC 0.1MF
C855	1-164-227-11	s	CAPACITOR,CERAMIC 0.022MF/25V
C856	1-164-227-11	s	CAPACITOR,CERAMIC 0.022MF/25V
C857	1-164-227-11	s	CAPACITOR,CERAMIC 0.022MF/25V
C858	1-164-227-11	s	CAPACITOR,CERAMIC 0.022MF/25V
C859	1-164-227-11	s	CAPACITOR,CERAMIC 0.022MF/25V
C860	1-164-227-11	s	CAPACITOR,CERAMIC 0.022MF/25V
C861	1-107-826-11	s	CAPACITOR,CHIP CERAMIC 0.1MF
C900	1-126-392-11	s	CAPACITOR,CHIP ELECT100MF/6.3V
C901	1-164-227-11	s	CAPACITOR,CERAMIC 0.022MF/25V
C902	1-126-392-11	s	CAPACITOR,CHIP ELECT100MF/6.3V
C903	1-164-227-11	s	CAPACITOR,CERAMIC 0.022MF/25V
C904	1-164-227-11	s	CAPACITOR,CERAMIC 0.022MF/25V
C905	1-162-922-11	s	CAPACITOR,CERAMIC 39PF/50V CH
C905 *1	1-162-925-11	s	CAPACITOR,CERAMIC 68PF/50V CH [FOR DSR-1800P]

(VPR-71/71P BOARD (for DSR-1800/P))

Ref. No. or Q'ty	Part No.	SP	Description
C905 *1	1-162-924-11	s	CAPACITOR,CERAMIC 56PF/50V CH [FOR DSR-1800(UC),(J)]
C906	1-164-227-11	s	CAPACITOR,CERAMIC 0.022MF/25V
C907	1-164-227-11	s	CAPACITOR,CERAMIC 0.022MF/25V
C908	1-164-227-11	s	CAPACITOR,CERAMIC 0.022MF/25V
C909	1-164-227-11	s	CAPACITOR,CERAMIC 0.022MF/25V
C910	1-164-227-11	s	CAPACITOR,CERAMIC 0.022MF/25V
C911	1-164-227-11	s	CAPACITOR,CERAMIC 0.022MF/25V
C912	1-164-227-11	s	CAPACITOR,CERAMIC 0.022MF/25V
C913	1-111-253-11	s	CAPACITOR TANTALUM 100MF/6.3V
C914	1-162-915-11	s	CAPACITOR,CERAMIC 10PF/50V CH
C915	1-126-396-11	s	CAPACITOR,ELECT 47MF/16V(CHIP)
C916	1-164-227-11	s	CAPACITOR,CERAMIC 0.022MF/25V
C917	1-164-227-11	s	CAPACITOR,CERAMIC 0.022MF/25V
C918	1-162-908-11	s	CAPACITOR,CERAMIC 3PF/50V 1608
C919	1-164-227-11	s	CAPACITOR,CERAMIC 0.022MF/25V
C920	1-126-392-11	s	CAPACITOR,CHIP ELECT100MF/6.3V
C921	1-164-227-11	s	CAPACITOR,CERAMIC 0.022MF/25V
C922	1-164-227-11	s	CAPACITOR,CERAMIC 0.022MF/25V
C923	1-164-227-11	s	CAPACITOR,CERAMIC 0.022MF/25V
C924	1-164-227-11	s	CAPACITOR,CERAMIC 0.022MF/25V
C925	1-164-227-11	s	CAPACITOR,CERAMIC 0.022MF/25V
C926	1-164-227-11	s	CAPACITOR,CERAMIC 0.022MF/25V
C927	1-164-227-11	s	CAPACITOR,CERAMIC 0.022MF/25V
C928	1-162-917-11	s	CAPACITOR,CERAMIC 15PF/50V CH
C929	1-164-384-11	s	CAPACITOR CERAMIC 130PF/50V CH [for DSR-1800(UC), (J)]
C929	1-164-230-11	s	CAPACITOR,CERAMIC 220PF/50V [for DSR-1800P]
C930	1-104-851-11	s	CAPACITOR,TANTALUM 10MF/10V
C931	1-104-851-11	s	CAPACITOR,TANTALUM 10MF/10V
C932	1-165-176-11	s	CAPACITOR,CERAMIC 47000PF/16V
C933	1-164-227-11	s	CAPACITOR,CERAMIC 0.022MF/25V
C934	1-162-915-11	s	CAPACITOR,CERAMIC 10PF/50V CH
C935	1-164-227-11	s	CAPACITOR,CERAMIC 0.022MF/25V
C936	1-162-923-11	s	CAPACITOR,CERAMIC 47PF/50V CH [for DSR-1800(UC), (J)]
C936	1-162-920-11	s	CAPACITOR,CERAMIC 27PF/50V CH [for DSR-1800P]
C937	1-162-915-11	s	CAPACITOR,CERAMIC 10PF/50V CH
C938	1-164-227-11	s	CAPACITOR,CERAMIC 0.022MF/25V
C939	1-162-923-11	s	CAPACITOR,CERAMIC 47PF/50V CH
C940	1-162-910-11	s	CAPACITOR,CERAMIC 5PF/50V 1608
C941	1-164-227-11	s	CAPACITOR,CERAMIC 0.022MF/25V
C942	1-164-227-11	s	CAPACITOR,CERAMIC 0.022MF/25V
C943	1-164-217-11	s	CAPACITOR,CERAMIC 150PF/50V CH
C944	1-162-908-11	s	CAPACITOR,CERAMIC 3PF/50V 1608
C945	1-162-908-11	s	CAPACITOR,CERAMIC 3PF/50V 1608
C1000	1-126-396-11	s	CAPACITOR,ELECT 47MF/16V(CHIP)
C1001	1-126-396-11	s	CAPACITOR,ELECT 47MF/16V(CHIP)
C1002	1-126-392-11	s	CAPACITOR,CHIP ELECT100MF/6.3V
C1003	1-126-396-11	s	CAPACITOR,ELECT 47MF/16V(CHIP)
C1004	1-126-392-11	s	CAPACITOR,CHIP ELECT100MF/6.3V
C1005	1-164-227-11	s	CAPACITOR,CERAMIC 0.022MF/25V
C1006	1-164-227-11	s	CAPACITOR,CERAMIC 0.022MF/25V
C1007	1-164-227-11	s	CAPACITOR,CERAMIC 0.022MF/25V
C1008	1-164-227-11	s	CAPACITOR,CERAMIC 0.022MF/25V
C1009	1-164-227-11	s	CAPACITOR,CERAMIC 0.022MF/25V
C1010	1-164-227-11	s	CAPACITOR,CERAMIC 0.022MF/25V
C1011	1-164-227-11	s	CAPACITOR,CERAMIC 0.022MF/25V

(VPR-71/71P BOARD (for DSR-1800/P))

Ref. No. or Q'ty	Part No.	SP	Description
C1012	1-164-227-11	s	CAPACITOR,CERAMIC 0.022MF/25V
C1013	1-164-227-11	s	CAPACITOR,CERAMIC 0.022MF/25V
C1014	1-126-392-11	s	CAPACITOR,CHIP ELECT100MF/6.3V
C1015	1-126-392-11	s	CAPACITOR,CHIP ELECT100MF/6.3V
C1016	1-126-392-11	s	CAPACITOR,CHIP ELECT100MF/6.3V
C1017	1-126-392-11	s	CAPACITOR,CHIP ELECT100MF/6.3V
C1018	1-164-227-11	s	CAPACITOR,CERAMIC 0.022MF/25V
C1019	1-164-227-11	s	CAPACITOR,CERAMIC 0.022MF/25V
C1020	1-164-227-11	s	CAPACITOR,CERAMIC 0.022MF/25V
C1021	1-164-227-11	s	CAPACITOR,CERAMIC 0.022MF/25V
C1022	1-164-227-11	s	CAPACITOR,CERAMIC 0.022MF/25V
C1023	1-164-227-11	s	CAPACITOR,CERAMIC 0.022MF/25V
C1024	1-126-396-11	s	CAPACITOR,ELECT 47MF/16V(CHIP)
C1025	1-126-396-11	s	CAPACITOR,ELECT 47MF/16V(CHIP)
C1026	1-126-392-11	s	CAPACITOR,CHIP ELECT100MF/6.3V
C1027	1-126-392-11	s	CAPACITOR,CHIP ELECT100MF/6.3V
C1028	1-126-392-11	s	CAPACITOR,CHIP ELECT100MF/6.3V
C1029	1-126-392-11	s	CAPACITOR,CHIP ELECT100MF/6.3V
C1030	1-164-227-11	s	CAPACITOR,CERAMIC 0.022MF/25V
C1031	1-126-396-11	s	CAPACITOR,ELECT 47MF/16V(CHIP)
C1032	1-162-921-11	s	CAPACITOR,CERAMIC 33PF/50V CH
C1033	1-126-396-11	s	CAPACITOR,ELECT 47MF/16V(CHIP)
C1034	1-162-919-11	s	CAPACITOR,CERAMIC 22PF/50V CH
C1035	1-164-217-11	s	CAPACITOR,CERAMIC 150PF/50V CH [for DSR-1800(UC), (J)]
C1035	1-164-230-11	s	CAPACITOR,CERAMIC 220PF/50V [for DSR-1800P]
C1036	1-126-396-11	s	CAPACITOR,ELECT 47MF/16V(CHIP)
C1037	1-162-921-11	s	CAPACITOR,CERAMIC 33PF/50V CH
C1038	1-164-230-11	s	CAPACITOR,CERAMIC 220PF/50V
C1039	1-164-227-11	s	CAPACITOR,CERAMIC 0.022MF/25V
C1040	1-107-826-11	s	CAPACITOR,CHIP CERAMIC 0.1MF
C1041	1-126-392-11	s	CAPACITOR,CHIP ELECT100MF/6.3V
C1042	1-107-826-11	s	CAPACITOR,CHIP CERAMIC 0.1MF
C1043	1-162-921-11	s	CAPACITOR,CERAMIC 33PF/50V CH [for DSR-1800(UC), (J)]
C1043	1-162-919-11	s	CAPACITOR,CERAMIC 22PF/50V CH [for DSR-1800P]
C1044	1-164-227-11	s	CAPACITOR,CERAMIC 0.022MF/25V
C1045	1-126-392-11	s	CAPACITOR,CHIP ELECT100MF/6.3V
C1046	1-165-176-11	s	CAPACITOR,CERAMIC 47000PF/16V
C1047	1-128-416-11	s	CAPACITOR ELECT 100MF/16V(105C
C1048	1-126-396-11	s	CAPACITOR,ELECT 47MF/16V(CHIP)
C1049	1-164-227-11	s	CAPACITOR,CERAMIC 0.022MF/25V
C1050	1-165-176-11	s	CAPACITOR,CERAMIC 47000PF/16V
C1100	1-162-927-11	s	CAPACITOR,CERAMIC 100PF/50V CH
C1101	1-162-927-11	s	CAPACITOR,CERAMIC 100PF/50V CH
C1102	1-162-927-11	s	CAPACITOR,CERAMIC 100PF/50V CH
C1103	1-162-927-11	s	CAPACITOR,CERAMIC 100PF/50V CH
C1104	1-107-826-11	s	CAPACITOR,CHIP CERAMIC 0.1MF
C1105	1-107-826-11	s	CAPACITOR,CHIP CERAMIC 0.1MF
C1106	1-107-826-11	s	CAPACITOR,CHIP CERAMIC 0.1MF
C1107	1-107-826-11	s	CAPACITOR,CHIP CERAMIC 0.1MF
C1108	1-107-826-11	s	CAPACITOR,CHIP CERAMIC 0.1MF
C1109	1-107-826-11	s	CAPACITOR,CHIP CERAMIC 0.1MF
C1110	1-162-927-11	s	CAPACITOR,CERAMIC 100PF/50V CH
C1111	1-162-927-11	s	CAPACITOR,CERAMIC 100PF/50V CH
C1112	1-162-927-11	s	CAPACITOR,CERAMIC 100PF/50V CH
C1113	1-162-927-11	s	CAPACITOR,CERAMIC 100PF/50V CH

(VPR-71/71P BOARD (for DSR-1800/P))

Ref. No. or Q'ty	Part No.	SP	Description
C1114	1-162-927-11	s	CAPACITOR,CERAMIC 100PF/50V CH
C1115	1-107-826-11	s	CAPACITOR,CHIP CERAMIC 0.1MF
C1116	1-107-826-11	s	CAPACITOR,CHIP CERAMIC 0.1MF
C1117	1-107-826-11	s	CAPACITOR,CHIP CERAMIC 0.1MF
C1118	1-162-970-11	s	CAPACITOR CERAMIC 0.01MF/25V B
C1119	1-164-227-11	s	CAPACITOR,CERAMIC 0.022MF/25V
C1120	1-164-227-11	s	CAPACITOR,CERAMIC 0.022MF/25V
C1121	1-126-396-11	s	CAPACITOR,ELECT 47MF/16V(CHIP)
C1122	1-164-227-11	s	CAPACITOR,CERAMIC 0.022MF/25V
C1123	1-164-227-11	s	CAPACITOR,CERAMIC 0.022MF/25V
C1124	1-107-826-11	s	CAPACITOR,CHIP CERAMIC 0.1MF
C1125	1-107-826-11	s	CAPACITOR,CHIP CERAMIC 0.1MF
C1126	1-107-826-11	s	CAPACITOR,CHIP CERAMIC 0.1MF
C1127	1-107-826-11	s	CAPACITOR,CHIP CERAMIC 0.1MF
C1128	1-107-826-11	s	CAPACITOR,CHIP CERAMIC 0.1MF
C1129	1-164-217-11	s	CAPACITOR,CERAMIC 150PF/50V CH
C1130	1-164-227-11	s	CAPACITOR,CERAMIC 0.022MF/25V
C1131	1-126-392-11	s	CAPACITOR,CHIP ELECT100MF/6.3V
C1133	1-162-970-11	s	CAPACITOR CERAMIC 0.01MF/25V B
C1134	1-107-826-11	s	CAPACITOR,CHIP CERAMIC 0.1MF
C1135	1-126-392-11	s	CAPACITOR,CHIP ELECT100MF/6.3V
C1136	1-126-396-11	s	CAPACITOR,ELECT 47MF/16V(CHIP)
C1137	1-126-396-11	s	CAPACITOR,ELECT 47MF/16V(CHIP)
C1138	1-165-176-11	s	CAPACITOR,CERAMIC 47000PF/16V
C1139	1-165-176-11	s	CAPACITOR,CERAMIC 47000PF/16V
C1200	1-126-392-11	s	CAPACITOR,CHIP ELECT100MF/6.3V
C1201	1-107-826-11	s	CAPACITOR,CHIP CERAMIC 0.1MF
C1202	1-107-826-11	s	CAPACITOR,CHIP CERAMIC 0.1MF
C1203	1-107-826-11	s	CAPACITOR,CHIP CERAMIC 0.1MF
C1204	1-107-826-11	s	CAPACITOR,CHIP CERAMIC 0.1MF
C1205	1-126-391-11	s	CAPACITOR ELECT 47MF/6.3V(105)
C1206	1-126-391-11	s	CAPACITOR ELECT 47MF/6.3V(105)
C1207	1-164-227-11	s	CAPACITOR,CERAMIC 0.022MF/25V
C1208	1-164-227-11	s	CAPACITOR,CERAMIC 0.022MF/25V
C1209	1-126-392-11	s	CAPACITOR,CHIP ELECT100MF/6.3V
C1210	1-126-392-11	s	CAPACITOR,CHIP ELECT100MF/6.3V
C1211	1-164-227-11	s	CAPACITOR,CERAMIC 0.022MF/25V
C1212	1-162-920-11	s	CAPACITOR,CERAMIC 27PF/50V CH [for DSR-1800(UC), (J)]
C1212	1-162-921-11	s	CAPACITOR,CERAMIC 33PF/50V CH [for DSR-1800P]
C1213	1-162-924-11	s	CAPACITOR,CERAMIC 56PF/50V CH [for DSR-1800(UC), (J)]
C1213	1-162-925-11	s	CAPACITOR,CERAMIC 68PF/50V CH [for DSR-1800P]
C1214	1-162-920-11	s	CAPACITOR,CERAMIC 27PF/50V CH [for DSR-1800(UC), (J)]
C1214	1-162-921-11	s	CAPACITOR,CERAMIC 33PF/50V CH [for DSR-1800P]
C1215	1-164-227-11	s	CAPACITOR,CERAMIC 0.022MF/25V
C1216	1-164-227-11	s	CAPACITOR,CERAMIC 0.022MF/25V
C1217	1-164-227-11	s	CAPACITOR,CERAMIC 0.022MF/25V
C1218	1-164-227-11	s	CAPACITOR,CERAMIC 0.022MF/25V
C1219	1-164-227-11	s	CAPACITOR,CERAMIC 0.022MF/25V
C1220	1-162-964-11	s	CAPACITOR,CERAMIC 1000PF/50V B
C1221	1-135-177-21	s	CAPACITOR TANTALUM 1MF/25V
C1222	1-162-970-11	s	CAPACITOR CERAMIC 0.01MF/25V B
C1223	1-135-210-11	s	CAPACITOR,TANTALUM 4.7MF/10V
C1224	1-162-970-11	s	CAPACITOR CERAMIC 0.01MF/25V B
C1225	1-164-227-11	s	CAPACITOR,CERAMIC 0.022MF/25V

(VPR-71/71P BOARD (for DSR-1800/P))

Ref. No. or Q'ty	Part No.	SP	Description
C1226	1-107-826-11	s	CAPACITOR,CHIP CERAMIC 0.1MF
C1227	1-126-392-11	s	CAPACITOR,CHIP ELECT100MF/6.3V
C1228	1-164-227-11	s	CAPACITOR,CERAMIC 0.022MF/25V
C1229	1-164-227-11	s	CAPACITOR,CERAMIC 0.022MF/25V
C1230	1-126-392-11	s	CAPACITOR,CHIP ELECT100MF/6.3V
C1231	1-164-227-11	s	CAPACITOR,CERAMIC 0.022MF/25V
C1232	1-164-227-11	s	CAPACITOR,CERAMIC 0.022MF/25V
C1233	1-126-392-11	s	CAPACITOR,CHIP ELECT100MF/6.3V
C1234	1-107-826-11	s	CAPACITOR,CHIP CERAMIC 0.1MF
C1235	1-164-227-11	s	CAPACITOR,CERAMIC 0.022MF/25V
C1236	1-164-227-11	s	CAPACITOR,CERAMIC 0.022MF/25V
C1237	1-164-227-11	s	CAPACITOR,CERAMIC 0.022MF/25V
C1238	1-164-227-11	s	CAPACITOR,CERAMIC 0.022MF/25V
C1239	1-164-227-11	s	CAPACITOR,CERAMIC 0.022MF/25V
C1240	1-107-826-11	s	CAPACITOR,CHIP CERAMIC 0.1MF
C1241	1-107-826-11	s	CAPACITOR,CHIP CERAMIC 0.1MF
C1242	1-104-915-11	s	CAPACITOR,CHIP 2.2MF/20V
C1243	1-165-176-11	s	CAPACITOR,CERAMIC 47000PF/16V
C1244	1-107-826-11	s	CAPACITOR,CHIP CERAMIC 0.1MF
C1245	1-107-826-11	s	CAPACITOR,CHIP CERAMIC 0.1MF
C1246	1-162-964-11	s	CAPACITOR,CERAMIC 1000PF/50V B
C1247	1-162-964-11	s	CAPACITOR,CERAMIC 1000PF/50V B
C1248	1-162-964-11	s	CAPACITOR,CERAMIC 1000PF/50V B
C1249	1-107-826-11	s	CAPACITOR,CHIP CERAMIC 0.1MF
C1250	1-135-177-21	s	CAPACITOR TANTALUM 1MF/25V
C1251	1-107-826-11	s	CAPACITOR,CHIP CERAMIC 0.1MF
C1252	1-107-826-11	s	CAPACITOR,CHIP CERAMIC 0.1MF
C1253	1-107-826-11	s	CAPACITOR,CHIP CERAMIC 0.1MF
C1254	1-107-826-11	s	CAPACITOR,CHIP CERAMIC 0.1MF
C1255	1-107-826-11	s	CAPACITOR,CHIP CERAMIC 0.1MF
C1256	1-107-826-11	s	CAPACITOR,CHIP CERAMIC 0.1MF
C1257	1-107-826-11	s	CAPACITOR,CHIP CERAMIC 0.1MF
C1258	1-107-826-11	s	CAPACITOR,CHIP CERAMIC 0.1MF
C1259	1-107-826-11	s	CAPACITOR,CHIP CERAMIC 0.1MF
C1260	1-107-826-11	s	CAPACITOR,CHIP CERAMIC 0.1MF
C1261	1-107-826-11	s	CAPACITOR,CHIP CERAMIC 0.1MF
C1262	1-126-396-11	s	CAPACITOR,ELECT 47MF/16V(CHIP)
C1264	1-107-826-11	s	CAPACITOR,CHIP CERAMIC 0.1MF
C1265	1-107-826-11	s	CAPACITOR,CHIP CERAMIC 0.1MF
C1266	1-107-826-11	s	CAPACITOR,CHIP CERAMIC 0.1MF
C1267	1-107-826-11	s	CAPACITOR,CHIP CERAMIC 0.1MF
C1268	1-107-826-11	s	CAPACITOR,CHIP CERAMIC 0.1MF [for DSR-1800P]
C1269	1-107-826-11	s	CAPACITOR,CHIP CERAMIC 0.1MF [for DSR-1800P]
C1302	1-107-826-11	s	CAPACITOR,CHIP CERAMIC 0.1MF
C1303	1-107-826-11	s	CAPACITOR,CHIP CERAMIC 0.1MF
C1304	1-126-392-11	s	CAPACITOR,CHIP ELECT100MF/6.3V
C1305	1-164-227-11	s	CAPACITOR,CERAMIC 0.022MF/25V
C1306	1-164-227-11	s	CAPACITOR,CERAMIC 0.022MF/25V
C1307	1-164-227-11	s	CAPACITOR,CERAMIC 0.022MF/25V
C1308	1-164-227-11	s	CAPACITOR,CERAMIC 0.022MF/25V
C1309	1-164-227-11	s	CAPACITOR,CERAMIC 0.022MF/25V
C1310	1-164-227-11	s	CAPACITOR,CERAMIC 0.022MF/25V
C1311	1-164-227-11	s	CAPACITOR,CERAMIC 0.022MF/25V
C1312	1-164-227-11	s	CAPACITOR,CERAMIC 0.022MF/25V
C1314	1-164-227-11	s	CAPACITOR,CERAMIC 0.022MF/25V
C1315	1-164-227-11	s	CAPACITOR,CERAMIC 0.022MF/25V
C1317	1-126-392-11	s	CAPACITOR,CHIP ELECT100MF/6.3V

(VPR-71/71P BOARD (for DSR-1800/P))

Ref. No. or Q'ty	Part No.	SP	Description
C1318	1-126-392-11	s	CAPACITOR,CHIP ELECT100MF/6.3V
C1320	1-164-227-11	s	CAPACITOR,CERAMIC 0.022MF/25V
C1321	1-164-227-11	s	CAPACITOR,CERAMIC 0.022MF/25V
C1322	1-107-826-11	s	CAPACITOR,CHIP CERAMIC 0.1MF
CN102	1-794-873-11	o	CONNECTOR, BNC 2P
CN200	1-774-965-11	o	CONNECTOR, BNC (RECEPTACLE)
CN201	1-569-587-31	s	CONNECTOR, DIN
CN202	1-794-872-11	o	CONNECTOR, BNC 2P
CN901	1-774-965-11	o	CONNECTOR, BNC (RECEPTACLE)
CN902	1-569-587-31	s	CONNECTOR, DIN
CN903	1-774-965-11	o	CONNECTOR, BNC (RECEPTACLE)
CN1001	1-794-872-11	o	CONNECTOR, BNC 2P
CN1100	1-764-117-21	s	PLUG,(D) SUB CONNECTOR 15P
CT600	1-141-322-11	s	CAPACITOR,VAR,TRIMMER
D200	8-719-941-23	s	DIODE DA204U [for DSR-1800(UC), (J)]
D201	8-719-024-81	s	DIODE 1SS300-TE85L
D203	8-719-989-08	s	DIODE RB717F
D204	8-719-024-81	s	DIODE 1SS300-TE85L
D300	8-719-941-04	s	DIODE SB007-03CP
D301	8-719-024-81	s	DIODE 1SS300-TE85L
D400	8-719-041-39	s	DIODE KV1470 (5MA)
D401	8-719-941-23	s	DIODE DA204U [for DSR-1800P]
D402	8-719-024-81	s	DIODE 1SS300-TE85L
D403	8-719-941-23	s	DIODE DA204U
D404	8-719-941-23	s	DIODE DA204U
D405	8-719-941-23	s	DIODE DA204U
D500	8-719-941-23	s	DIODE DA204U
D501	8-719-045-99	s	DIODE RD2.2M-B
D502	8-719-045-99	s	DIODE RD2.2M-B
D503	8-719-941-04	s	DIODE SB007-03CP
D600	8-719-024-81	s	DIODE 1SS300-TE85L
D601	8-719-041-39	s	DIODE KV1470 (5MA)
D602	8-719-978-04	s	DIODE DTZ-TT11-3.3B
D700	8-719-024-81	s	DIODE 1SS300-TE85L
D701	8-719-941-23	s	DIODE DA204U
D900	8-719-976-99	s	DIODE DTZ5.1B
D901	8-719-024-81	s	DIODE 1SS300-TE85L
D1000	8-719-941-04	s	DIODE SB007-03CP
D1001	8-719-941-04	s	DIODE SB007-03CP
D1002	8-719-941-04	s	DIODE SB007-03CP
D1003	8-719-941-04	s	DIODE SB007-03CP
D1004	8-719-941-04	s	DIODE SB007-03CP
D1005	8-719-941-04	s	DIODE SB007-03CP
D1100	8-719-941-23	s	DIODE DA204U
D1200	8-719-941-23	s	DIODE DA204U
D1201	8-719-041-39	s	DIODE KV1470 (5MA)
D1202	8-719-027-95	s	DIODE HSM88WK
D1203	8-719-404-35	s	DIODE MA141WK
FB300	1-469-094-11	s	FERRITE, EMI (SMD)
FB500	1-469-094-11	s	FERRITE, EMI (SMD)
FL100	1-239-896-12	s	FILTER, EMI (SMD)
FL101	1-239-896-12	s	FILTER, EMI (SMD)
FL200	1-239-896-12	s	FILTER, EMI (SMD)
FL201	1-239-896-12	s	FILTER, EMI (SMD)
FL202	1-239-896-12	s	FILTER, EMI (SMD)

(VPR-71/71P BOARD (for DSR-1800/P))

Ref. No. or Q'ty	Part No.	SP	Description
FL203	1-239-896-12	s	FILTER, EMI (SMD)
FL204	1-233-614-11	s	FILTER, LOW PASS
FL205	1-239-896-12	s	FILTER, EMI (SMD)
FL300	1-233-614-11	s	FILTER, LOW PASS
FL301	1-233-598-11	s	FILTER, LOW PASS [for DSR-1800(UC), (J)]
FL301	1-233-599-11	s	FILTER, LOW PASS [for DSR-1800P]
FL302	1-233-598-11	s	FILTER, LOW PASS [for DSR-1800(UC), (J)]
FL302	1-233-599-11	s	FILTER, LOW PASS [for DSR-1800P]
FL700	1-233-614-11	s	FILTER, LOW PASS
FL701	1-233-598-11	s	FILTER, LOW PASS [for DSR-1800(UC), (J)]
FL701	1-233-599-11	s	FILTER, LOW PASS [for DSR-1800P]
FL702	1-233-598-11	s	FILTER, LOW PASS [for DSR-1800(UC), (J)]
FL702	1-233-599-11	s	FILTER, LOW PASS [for DSR-1800P]
FL703	1-239-896-12	s	FILTER, EMI (SMD)
FL704	1-239-896-12	s	FILTER, EMI (SMD)
FL800	1-239-771-11	s	FILTER, LOW PASS
FL900	1-239-896-12	s	FILTER, EMI (SMD)
FL901	1-239-896-12	s	FILTER, EMI (SMD)
FL902	1-239-896-12	s	FILTER, EMI (SMD)
FL903	1-239-896-12	s	FILTER, EMI (SMD)
FL904	1-239-896-12	s	FILTER, EMI (SMD)
FL1000	1-239-896-12	s	FILTER, EMI (SMD)
FL1200	1-233-674-21	s	FILTER, EMI
FL1201	1-233-674-21	s	FILTER, EMI
IC200	8-759-082-61	s	IC TC4W53FU
IC201	8-759-196-97	s	IC TC7SH32FU (TE85R)
IC202	8-759-082-61	s	IC TC4W53FU
IC203	8-759-082-61	s	IC TC4W53FU
IC204	8-759-359-66	s	IC TL082CPW (E05)
IC300	8-759-387-83	s	IC MB40569PFV-ER
IC301	8-759-456-03	s	IC M66256GP (E2)
IC302	8-759-456-03	s	IC M66256GP (E2)
IC303	8-759-456-03	s	IC M66256GP (E2)
IC304	8-759-513-76	s	IC CXD8161AQ
IC305	8-759-271-86	s	IC TC7SH04FU
IC306	8-759-196-97	s	IC TC7SH32FU (TE85R)
IC307	8-752-363-60	s	IC CXD2307R-T4
IC308	8-759-359-66	s	IC TL082CPW (E05)
IC309	8-752-052-73	s	IC CXA1451M
IC310	8-752-052-73	s	IC CXA1451M
IC311	8-752-052-73	s	IC CXA1451M
IC400	8-752-339-04	s	IC CXD2208Q
IC401	8-759-271-86	s	IC TC7SH04FU
IC402	8-759-184-64	s	IC TC4W66FU
IC403	8-759-076-06	s	IC TL064CPW
IC404	8-759-359-66	s	IC TL082CPW (E05)
IC405	8-759-173-16	s	IC TL062CPW
IC406	8-759-271-86	s	IC TC7SH04FU
IC407	8-759-082-60	s	IC TC7S66FU
IC408	8-759-520-55	s	IC CXD8243AM
IC409	8-759-271-86	s	IC TC7SH04FU
IC410	8-759-082-60	s	IC TC7S66FU

(VPR-71/71P BOARD (for DSR-1800/P))

Ref. No. or Q'ty	Part No.	SP	Description
IC500	8-759-523-01	s	IC TC74HC4052AFT(EL)
IC501	8-759-490-41	s	IC TC74VHCT541AFT(EL)
IC502	8-759-287-54	s	IC TL084CPW (E20)
IC503	8-759-449-58	s	IC LM7131BCM5X
IC504	8-759-082-61	s	IC TC4W53FU
IC506	8-759-324-03	s	IC HA17431UA(TL)
IC507	8-759-324-03	s	IC HA17431UA(TL)
IC508	8-759-447-90	s	IC TLC5733AIPM
IC509	8-752-376-32	s	IC CXD2310AR
IC510	8-759-198-63	s	IC S-81230SG-QB-T1
IC511	8-759-524-50	s	IC TC74VHC541FT(EL)
IC512	8-759-524-50	s	IC TC74VHC541FT(EL)
IC513	8-759-524-50	s	IC TC74VHC541FT(EL)
IC514	8-759-196-97	s	IC TC7SH32FU (TE85R)
IC515	8-759-196-97	s	IC TC7SH32FU (TE85R)
IC516	8-759-196-96	s	IC TC7SH08FU (TE85R)
IC517	8-759-449-58	s	IC LM7131BCM5X
IC600	8-759-524-50	s	IC TC74VHC541FT(EL)
IC601	8-759-524-07	s	IC TC74VHC138FT(EL)
IC602	8-759-564-49	s	IC TC7W53FU-TE12R
IC603	8-759-271-86	s	IC TC7SH04FU
IC604	8-759-523-97	s	IC TC74VHC123AFT(EL)
IC605	8-759-987-27	s	IC LM1881M
IC606	8-759-196-12	s	IC SN74LS221DB
IC607	8-759-523-95	s	IC TC74VHC74FT(EL)
IC608	8-759-082-57	s	IC TC7W04FU
IC609	8-759-196-12	s	IC SN74LS221DB
IC610	8-759-196-97	s	IC TC7SH32FU (TE85R)
IC611	8-759-523-02	s	IC TC74HC4053AFT(EL)
IC612	8-759-083-94	s	IC TC7W74FU
IC613	8-759-523-97	s	IC TC74VHC123AFT(EL)
IC614	8-759-082-61	s	IC TC4W53FU
IC615	8-759-271-86	s	IC TC7SH04FU
IC616	8-759-196-96	s	IC TC7SH08FU (TE85R)
IC617	8-759-196-93	s	IC TC7SH00FU-TE85R
IC618	8-759-198-63	s	IC S-81230SG-QB-T1
IC619	8-759-524-19	s	IC TC74VHC164FT(EL)
IC620	8-759-343-09	s	IC CXD2193AR-ER
IC621	8-759-524-50	s	IC TC74VHC541FT(EL)
IC700	8-759-278-58	s	IC NJM4558V (TE2)
IC702	8-759-278-58	s	IC NJM4558V (TE2)
IC703	8-759-278-58	s	IC NJM4558V (TE2)
IC704	8-759-198-63	s	IC S-81230SG-QB-T1
IC705	8-752-052-82	s	IC CXA1432M
IC706	8-759-449-58	s	IC LM7131BCM5X
IC707	8-759-524-10	s	IC TC74VHC157FT (EL)
IC708	8-759-196-97	s	IC TC7SH32FU (TE85R)
IC709	8-752-369-84	s	IC CXD2309Q (T6)
IC710	8-759-449-58	s	IC LM7131BCM5X
IC800	8-752-054-80	s	IC CXA1521M
IC801	8-752-054-80	s	IC CXA1521M
IC802	8-759-196-12	s	IC SN74LS221DB
IC803	8-759-287-54	s	IC TL084CPW (E20)
IC804	8-759-082-61	s	IC TC4W53FU
IC805	8-759-082-61	s	IC TC4W53FU
IC806	8-759-359-66	s	IC TL082CPW (E05)
IC807	8-752-090-56	s	IC CXA3178M-T4
IC808	8-752-061-02	s	IC CXA1450M
IC900	8-752-052-73	s	IC CXA1451M

http://getMANUAL.com

(VPR-71/71P BOARD (for DSR-1800/P))

Ref. No. or Q'ty	Part No.	SP	Description
IC901	8-759-449-58	s	IC LM7131BCM5X
IC902	8-759-082-61	s	IC TC4W53FU
IC903	8-759-082-59	s	IC TC7W32FU
IC904	8-759-287-54	s	IC TL084CPW (E20)
IC905	8-759-082-61	s	IC TC4W53FU
IC906	8-752-052-73	s	IC CXA1451M
IC907	8-759-449-58	s	IC LM7131BCM5X
IC1000	8-759-172-41	s	IC L78M09T-TL
IC1001	8-759-172-41	s	IC L78M09T-TL
IC1002	8-759-539-90	s	IC LM2940SX-5.0
IC1003	8-759-539-90	s	IC LM2940SX-5.0
IC1004	8-759-539-89	s	IC LM2990SX-5.0
IC1005	8-759-539-89	s	IC LM2990SX-5.0
IC1006	8-759-082-57	s	IC TC7W04FU
IC1007	8-752-061-02	s	IC CXA1450M
IC1008	8-752-052-73	s	IC CXA1451M
IC1009	8-759-987-27	s	IC LM1881M
IC1100	8-759-173-16	s	IC TL062CPW
IC1101	8-759-076-06	s	IC TL064CPW
IC1102	8-759-278-58	s	IC NJM4558V (TE2)
IC1103	8-759-324-03	s	IC HA17431UA(TL)
IC1104	8-759-248-78	s	IC MB88102PFV-G-BND-ER
IC1105	8-759-523-97	s	IC TC74VHC123AFT(EL)
IC1106	8-759-076-06	s	IC TL064CPW
IC1107	8-759-076-06	s	IC TL064CPW
IC1108	8-759-522-17	s	IC NJM79M09DLA(TE1)
IC1109	8-759-522-18	s	IC NJM78M09DLA(TE1)
IC1200	8-759-524-50	s	IC TC74VHC541FT(EL)
IC1201	8-759-524-50	s	IC TC74VHC541FT(EL)
IC1202	8-759-490-41	s	IC TC74VHCT541AFT(EL)
IC1203	8-759-490-41	s	IC TC74VHCT541AFT(EL)
IC1204	8-759-082-61	s	IC TC4W53FU
IC1205	8-759-702-08	s	IC NJM360M
IC1206	8-752-335-47	s	IC CXD1216M
IC1207	8-759-523-02	s	IC TC74HC4053AFT(EL)
IC1208	8-759-271-86	s	IC TC7SH04FU
IC1209	8-759-271-86	s	IC TC7SH04FU
IC1210	8-759-702-08	s	IC NJM360M
IC1211	8-759-271-88	s	IC TC7SHU04FU
IC1212	8-759-271-86	s	IC TC7SH04FU
IC1213	8-759-681-40	s	IC CXD9128AR
IC1214	8-759-650-01	s	IC CXD9125R
IC1216	8-759-196-93	s	IC TC7SH00FU-TE85R [for DSR-1800P]
IC1217	8-759-196-93	s	IC TC7SH00FU-TE85R [for DSR-1800P]
IC1300	8-752-369-84	s	IC CXD2309Q (T6)
L200	1-414-398-11	s	INDUCTOR (SMD) 10UH
L201	1-414-398-11	s	INDUCTOR (SMD) 10UH
L202	1-414-398-11	s	INDUCTOR (SMD) 10UH
L300	1-414-394-11	s	INDUCTOR (SMD) 2.2UH
L301	1-414-398-11	s	INDUCTOR (SMD) 10UH
L302	1-410-373-31	s	CHIP INDUCTOR 2.2UH (3225) [for DSR-1800(UC), (J)]
L302	1-410-372-21	s	CHIP INDUCTOR 1.8UH (3225) [for DSR-1800P]
L303	1-410-373-31	s	CHIP INDUCTOR 2.2UH (3225) [for DSR-1800(UC), (J)]
L303	1-410-372-21	s	CHIP INDUCTOR 1.8UH (3225) [for DSR-1800P]

(VPR-71/71P BOARD (for DSR-1800/P))

Ref. No. or Q'ty	Part No.	SP	Description
L304	1-410-373-31	s	CHIP INDUCTOR 2.2UH (3225) [for DSR-1800(UC), (J)]
L304	1-410-372-21	s	CHIP INDUCTOR 1.8UH (3225) [for DSR-1800P]
L305	1-414-398-11	s	INDUCTOR (SMD) 10UH
L306	1-414-398-11	s	INDUCTOR (SMD) 10UH
L400	1-410-387-11	s	INDUCTOR,CHIP 33UH (3225)
L401	1-410-375-11	s	CHIP INDUCTOR 3.3UH (3225)
L402	1-414-398-11	s	INDUCTOR (SMD) 10UH
L403	1-414-398-11	s	INDUCTOR (SMD) 10UH
L404	1-410-389-31	s	INDUCTOR,CHIP 47UH (3225) [for DSR-1800(UC), (J)]
L404	1-410-389-31	s	INDUCTOR,CHIP 47UH (3225) [for DSR-1800P]
L405	1-410-378-11	s	INDUCTOR,CHIP 5.6UH (3225)
L406	1-414-404-11	s	INDUCTOR (SMD) 100UH
L407	1-414-398-11	s	INDUCTOR (SMD) 10UH
L408	1-414-404-11	s	INDUCTOR (SMD) 100UH
L409	1-414-404-11	s	INDUCTOR (SMD) 100UH
L410	1-414-404-11	s	INDUCTOR (SMD) 100UH
L411	1-414-398-11	s	INDUCTOR (SMD) 10UH
L412	1-414-398-11	s	INDUCTOR (SMD) 10UH
L500	1-414-398-11	s	INDUCTOR (SMD) 10UH
L501	1-414-398-11	s	INDUCTOR (SMD) 10UH
L502	1-414-398-11	s	INDUCTOR (SMD) 10UH
L503	1-414-398-11	s	INDUCTOR (SMD) 10UH
L600	1-414-400-11	s	INDUCTOR, 22UH
L601	1-414-400-11	s	INDUCTOR, 22UH
L602	1-410-390-11	s	CHIP INDUCTOR 56UH (3225)
L603	1-410-655-31	s	INDUCTOR,CHIP 120UH (3225)
L604	1-414-398-11	s	INDUCTOR (SMD) 10UH
L605	1-414-398-11	s	INDUCTOR (SMD) 10UH
L700	1-414-400-11	s	INDUCTOR, 22UH
L701	1-414-400-11	s	INDUCTOR, 22UH
L702	1-414-400-11	s	INDUCTOR, 22UH
L703	1-414-400-11	s	INDUCTOR, 22UH
L704	1-414-400-11	s	INDUCTOR, 22UH
L705	1-414-400-11	s	INDUCTOR, 22UH
L706	1-414-398-11	s	INDUCTOR (SMD) 10UH
L707	1-414-398-11	s	INDUCTOR (SMD) 10UH
L708	1-414-400-11	s	INDUCTOR, 22UH
L709	1-410-387-11	s	INDUCTOR,CHIP 33UH (3225)
L710	1-414-400-11	s	INDUCTOR, 22UH
L711	1-414-400-11	s	INDUCTOR, 22UH
L712	1-410-387-11	s	INDUCTOR,CHIP 33UH (3225)
L713	1-414-400-11	s	INDUCTOR, 22UH
L800	1-414-400-11	s	INDUCTOR, 22UH
L801	1-414-400-11	s	INDUCTOR, 22UH
L802	1-414-404-11	s	INDUCTOR (SMD) 100UH
L803	1-414-400-11	s	INDUCTOR, 22UH
L804	1-410-389-31	s	INDUCTOR,CHIP 47UH (3225) [for DSR-1800(UC), (J)]
L804	1-410-386-11	s	CHIP INDUCTOR 27UH (3225) [for DSR-1800P]
L805	1-410-389-31	s	INDUCTOR,CHIP 47UH (3225) [for DSR-1800(UC), (J)]
L805	1-410-386-11	s	CHIP INDUCTOR 27UH (3225) [for DSR-1800P]
L806	1-410-389-31	s	INDUCTOR,CHIP 47UH (3225) [for DSR-1800(UC), (J)]

(VPR-71/71P BOARD (for DSR-1800/P))

Ref. No. or Q'ty	Part No.	SP	Description
L806	1-410-386-11	s	CHIP INDUCTOR 27UH (3225) [for DSR-1800P]
L807	1-410-389-31	s	INDUCTOR,CHIP 47UH (3225) [for DSR-1800(UC), (J)]
L807	1-410-386-11	s	CHIP INDUCTOR 27UH (3225) [for DSR-1800P]
L808	1-414-400-11	s	INDUCTOR, 22UH
L809	1-414-400-11	s	INDUCTOR, 22UH [for DSR-1800P]
L900	1-414-400-11	s	INDUCTOR, 22UH
L901	1-414-400-11	s	INDUCTOR, 22UH
L902	1-414-400-11	s	INDUCTOR, 22UH
L903	1-410-391-11	s	INDUCTOR,CHIP 68UH (3225) [for DSR-1800(UC), (J)]
L903	1-414-404-11	s	INDUCTOR (SMD) 100UH [for DSR-1800P]
L904	1-410-389-31	s	INDUCTOR,CHIP 47UH (3225)
L905	1-410-387-11	s	INDUCTOR,CHIP 33UH (3225)
L1000	1-424-641-11	s	COIL, CHOKE 22UH
L1001	1-424-641-11	s	COIL, CHOKE 22UH
L1002	1-414-400-11	s	INDUCTOR, 22UH
L1003	1-414-400-11	s	INDUCTOR, 22UH
L1004	1-414-400-11	s	INDUCTOR, 22UH
L1005	1-410-391-11	s	INDUCTOR,CHIP 68UH (3225) [for DSR-1800(UC), (J)]
L1005	1-410-392-11	s	INDUCTOR,CHIP 82UH (3225) [for DSR-1800P]
L1006	1-414-404-11	s	INDUCTOR (SMD) 100UH
L1007	1-410-391-11	s	INDUCTOR,CHIP 68UH (3225)
L1008	1-414-400-11	s	INDUCTOR, 22UH
L1009	1-414-400-11	s	INDUCTOR, 22UH
L1100	1-414-400-11	s	INDUCTOR, 22UH
L1101	1-414-400-11	s	INDUCTOR, 22UH
L1200	1-414-400-11	s	INDUCTOR, 22UH
L1201	1-414-400-11	s	INDUCTOR, 22UH
L1202	1-414-400-11	s	INDUCTOR, 22UH
L1203	1-414-400-11	s	INDUCTOR, 22UH
L1204	1-414-400-11	s	INDUCTOR, 22UH
L1205	1-410-389-31	s	INDUCTOR,CHIP 47UH (3225) [for DSR-1800(UC), (J)]
L1205	1-410-386-11	s	CHIP INDUCTOR 27UH (3225) [for DSR-1800P]
L1206	1-410-389-31	s	INDUCTOR,CHIP 47UH (3225) [for DSR-1800(UC), (J)]
L1206	1-410-386-11	s	CHIP INDUCTOR 27UH (3225) [for DSR-1800P]
L1207	1-414-400-11	s	INDUCTOR, 22UH
L1208	1-414-400-11	s	INDUCTOR, 22UH
L1209	1-414-398-11	s	INDUCTOR (SMD) 10UH
L1210	1-410-374-11	s	INDUCTOR,CHIP 2.7UH (3225)
L1211	1-414-400-11	s	INDUCTOR, 22UH
L1212	1-414-398-11	s	INDUCTOR (SMD) 10UH
L1300	1-414-400-11	s	INDUCTOR, 22UH
L1302	1-414-400-11	s	INDUCTOR, 22UH
L1303	1-414-400-11	s	INDUCTOR, 22UH
LV600	1-411-275-21	s	COIL, VARIABLE
PS1000 ⚠	1-533-282-21	s	CIRCUIT PROTECTOR 2A (3225)
PS1001 ⚠	1-533-282-21	s	CIRCUIT PROTECTOR 2A (3225)
PS1002 ⚠	1-533-282-21	s	CIRCUIT PROTECTOR 2A (3225)
PS1003 ⚠	1-533-282-21	s	CIRCUIT PROTECTOR 2A (3225)

(VPR-71/71P BOARD (for DSR-1800/P))

Ref. No. or Q'ty	Part No.	SP	Description
PS1004 ⚠	1-533-282-21	s	CIRCUIT PROTECTOR 2A (3225)
PS1005 ⚠	1-533-282-21	s	CIRCUIT PROTECTOR 2A (3225)
Q200	8-729-907-46	s	TRANSISTOR IMZ1
Q201	8-729-903-10	s	TRANSISTOR FMW1 [for DSR-1800(UC), (J)]
Q202	8-729-117-32	s	TRANSISTOR 2SC4177
Q203	8-729-140-63	s	TRANSISTOR 2SA1611-M5M6
Q204	8-729-140-63	s	TRANSISTOR 2SA1611-M5M6
Q205	8-729-117-32	s	TRANSISTOR 2SC4177
Q206	8-729-117-32	s	TRANSISTOR 2SC4177
Q207	8-729-904-04	s	TRANSISTOR FMS2
Q208	8-729-140-63	s	TRANSISTOR 2SA1611-M5M6
Q209	8-729-117-72	s	TRANSISTOR 2SC4178
Q210	8-729-907-46	s	TRANSISTOR IMZ1
Q211	8-729-907-46	s	TRANSISTOR IMZ1
Q212	8-729-117-72	s	TRANSISTOR 2SC4178
Q213	8-729-117-32	s	TRANSISTOR 2SC4177
Q214	8-729-117-72	s	TRANSISTOR 2SC4178
Q215	8-729-904-04	s	TRANSISTOR FMS2
Q300	8-729-029-14	s	TRANSISTOR DTC144EUA-T106
Q301	8-729-117-32	s	TRANSISTOR 2SC4177
Q302	8-729-117-32	s	TRANSISTOR 2SC4177
Q303	8-729-117-32	s	TRANSISTOR 2SC4177
Q400	8-729-029-14	s	TRANSISTOR DTC144EUA-T106
Q401	8-729-140-63	s	TRANSISTOR 2SA1611-M5M6
Q402	8-729-117-32	s	TRANSISTOR 2SC4177
Q403	8-729-117-32	s	TRANSISTOR 2SC4177
Q404	8-729-117-32	s	TRANSISTOR 2SC4177
Q405	8-729-140-63	s	TRANSISTOR 2SA1611-M5M6
Q406	8-729-140-63	s	TRANSISTOR 2SA1611-M5M6
Q407	8-729-140-63	s	TRANSISTOR 2SA1611-M5M6
Q408	8-729-117-32	s	TRANSISTOR 2SC4177
Q409	8-729-117-32	s	TRANSISTOR 2SC4177
Q410	8-729-140-63	s	TRANSISTOR 2SA1611-M5M6
Q411	8-729-029-14	s	TRANSISTOR DTC144EUA-T106
Q412	8-729-140-63	s	TRANSISTOR 2SA1611-M5M6
Q413	8-729-140-63	s	TRANSISTOR 2SA1611-M5M6
Q414	8-729-140-63	s	TRANSISTOR 2SA1611-M5M6
Q500	8-729-117-72	s	TRANSISTOR 2SC4178
Q501	8-729-117-32	s	TRANSISTOR 2SC4177
Q502	8-729-117-32	s	TRANSISTOR 2SC4177
Q503	8-729-117-32	s	TRANSISTOR 2SC4177
Q504	8-729-117-32	s	TRANSISTOR 2SC4177
Q505	8-729-117-72	s	TRANSISTOR 2SC4178
Q506	8-729-117-32	s	TRANSISTOR 2SC4177
Q507	8-729-117-72	s	TRANSISTOR 2SC4178
Q508	8-729-422-44	s	TRANSISTOR 2SK663
Q509	8-729-422-44	s	TRANSISTOR 2SK663
Q510	8-729-422-44	s	TRANSISTOR 2SK663
Q511	8-729-422-44	s	TRANSISTOR 2SK663
Q512	8-729-140-63	s	TRANSISTOR 2SA1611-M5M6
Q513	8-729-140-63	s	TRANSISTOR 2SA1611-M5M6
Q514	8-729-140-63	s	TRANSISTOR 2SA1611-M5M6
Q515	8-729-117-32	s	TRANSISTOR 2SC4177
Q516	8-729-117-32	s	TRANSISTOR 2SC4177
Q517	8-729-117-72	s	TRANSISTOR 2SC4178
Q518	8-729-117-72	s	TRANSISTOR 2SC4178
Q519	8-729-117-72	s	TRANSISTOR 2SC4178

(VPR-71/71P BOARD (for DSR-1800/P))

Ref. No. or Q'ty	Part No.	SP	Description
Q520	8-729-117-72	s	TRANSISTOR 2SC4178
Q521	8-729-140-63	s	TRANSISTOR 2SA1611-M5M6
Q522	8-729-140-63	s	TRANSISTOR 2SA1611-M5M6
Q600	8-729-117-32	s	TRANSISTOR 2SC4177
Q601	8-729-117-32	s	TRANSISTOR 2SC4177
Q602	8-729-140-63	s	TRANSISTOR 2SA1611-M5M6
Q603	8-729-140-63	s	TRANSISTOR 2SA1611-M5M6
Q700	8-729-117-32	s	TRANSISTOR 2SC4177
Q701	8-729-117-32	s	TRANSISTOR 2SC4177
Q702	8-729-140-63	s	TRANSISTOR 2SA1611-M5M6
Q703	8-729-140-63	s	TRANSISTOR 2SA1611-M5M6
Q704	8-729-117-32	s	TRANSISTOR 2SC4177
Q705	8-729-140-63	s	TRANSISTOR 2SA1611-M5M6
Q706	8-729-117-32	s	TRANSISTOR 2SC4177
Q707	8-729-117-32	s	TRANSISTOR 2SC4177
Q708	8-729-422-44	s	TRANSISTOR 2SK663
Q709	8-729-422-44	s	TRANSISTOR 2SK663
Q710	8-729-140-63	s	TRANSISTOR 2SA1611-M5M6
Q711	8-729-117-32	s	TRANSISTOR 2SC4177
Q712	8-729-140-63	s	TRANSISTOR 2SA1611-M5M6
Q713	8-729-117-32	s	TRANSISTOR 2SC4177
Q714	8-729-117-32	s	TRANSISTOR 2SC4177
Q715	8-729-422-44	s	TRANSISTOR 2SK663
Q716	8-729-422-44	s	TRANSISTOR 2SK663
Q717	8-729-140-63	s	TRANSISTOR 2SA1611-M5M6
Q718	8-729-029-14	s	TRANSISTOR DTC144EUA-T106
Q800	8-729-143-14	s	TRANSISTOR 2SC4176-B35
Q801	8-729-140-63	s	TRANSISTOR 2SA1611-M5M6
Q802	8-729-117-32	s	TRANSISTOR 2SC4177
Q803	8-729-140-63	s	TRANSISTOR 2SA1611-M5M6
Q804	8-729-117-32	s	TRANSISTOR 2SC4177
Q805	8-729-117-32	s	TRANSISTOR 2SC4177
Q806	8-729-117-32	s	TRANSISTOR 2SC4177
Q807	8-729-117-32	s	TRANSISTOR 2SC4177
Q808	8-729-117-32	s	TRANSISTOR 2SC4177
Q809	8-729-117-32	s	TRANSISTOR 2SC4177
Q810	8-729-143-14	s	TRANSISTOR 2SC4176-B35
Q811	8-729-903-82	s	TRANSISTOR FMW2
Q812	8-729-903-82	s	TRANSISTOR FMW2
Q900	8-729-026-58	s	TRANSISTOR FMY3A-T148
Q901	8-729-117-32	s	TRANSISTOR 2SC4177
Q902	8-729-143-14	s	TRANSISTOR 2SC4176-B35
Q903	8-729-117-32	s	TRANSISTOR 2SC4177
Q904	8-729-026-58	s	TRANSISTOR FMY3A-T148
Q905	8-729-143-14	s	TRANSISTOR 2SC4176-B35
Q906	8-729-140-63	s	TRANSISTOR 2SA1611-M5M6
Q907	8-729-117-32	s	TRANSISTOR 2SC4177
Q908	8-729-140-63	s	TRANSISTOR 2SA1611-M5M6
Q909	8-729-117-32	s	TRANSISTOR 2SC4177
Q910	8-729-117-32	s	TRANSISTOR 2SC4177
Q1000	8-729-117-32	s	TRANSISTOR 2SC4177
Q1001	8-729-117-32	s	TRANSISTOR 2SC4177
Q1002	8-729-117-32	s	TRANSISTOR 2SC4177
Q1003	8-729-026-58	s	TRANSISTOR FMY3A-T148
Q1004	8-729-117-32	s	TRANSISTOR 2SC4177
Q1005	8-729-117-32	s	TRANSISTOR 2SC4177
Q1006	8-729-907-46	s	TRANSISTOR IMZ1
Q1007	8-729-026-58	s	TRANSISTOR FMY3A-T148
Q1200	8-729-117-32	s	TRANSISTOR 2SC4177

(VPR-71/71P BOARD (for DSR-1800/P))

Ref. No. or Q'ty	Part No.	SP	Description
Q1201	8-729-117-32	s	TRANSISTOR 2SC4177
Q1202	8-729-029-14	s	TRANSISTOR DTC144EUA-T106
Q1203	8-729-029-14	s	TRANSISTOR DTC144EUA-T106
Q1204	8-729-029-14	s	TRANSISTOR DTC144EUA-T106
Q1205	8-729-140-63	s	TRANSISTOR 2SA1611-M5M6
Q1206	8-729-140-63	s	TRANSISTOR 2SA1611-M5M6
Q1300	8-729-117-32	s	TRANSISTOR 2SC4177
Q1301	8-729-117-32	s	TRANSISTOR 2SC4177
Q1302	8-729-117-32	s	TRANSISTOR 2SC4177
R200	1-211-991-11	s	RESISTOR,CHIP 82 1/16W (1608)
R201	1-211-991-11	s	RESISTOR,CHIP 82 1/16W (1608)
R202	1-211-991-11	s	RESISTOR,CHIP 82 1/16W (1608)
R203	1-211-991-11	s	RESISTOR,CHIP 82 1/16W (1608)
R204	1-218-895-11	s	RESISTOR,CHIP 100K 1/16W(1608)
R205	1-218-847-11	s	RESISTOR, CHIP 1K 1/16W (1608)
R206	1-218-847-11	s	RESISTOR, CHIP 1K 1/16W (1608)
R207	1-218-857-11	s	RESISTOR,CHIP 2.7K 1/16W(1608)
R209	1-218-895-11	s	RESISTOR,CHIP 100K 1/16W(1608) [for DSR-1800(UC), (J)]
R210	1-218-871-11	s	RESISTOR,CHIP 10K 1/16W (1608) [for DSR-1800(UC), (J)]
R211	1-218-871-11	s	RESISTOR,CHIP 10K 1/16W (1608) [for DSR-1800(UC), (J)]
R212	1-218-863-11	s	RESISTOR,CHIP 4.7K 1/16W(1608)
R213	1-218-823-11	s	RESISTOR,CHIP 100 1/16W (1608)
R214	1-218-847-11	s	RESISTOR, CHIP 1K 1/16W (1608)
R215	1-218-823-11	s	RESISTOR,CHIP 100 1/16W (1608)
R216	1-218-847-11	s	RESISTOR, CHIP 1K 1/16W (1608)
R217	1-218-857-11	s	RESISTOR,CHIP 2.7K 1/16W(1608)
R218	1-218-847-11	s	RESISTOR, CHIP 1K 1/16W (1608)
R219	1-218-823-11	s	RESISTOR,CHIP 100 1/16W (1608)
R220	1-218-875-11	s	RESISTOR,CHIP 15K 1/16W (1608)
R221	1-218-857-11	s	RESISTOR,CHIP 2.7K 1/16W(1608)
R222	1-218-823-11	s	RESISTOR,CHIP 100 1/16W (1608)
R223	1-218-847-11	s	RESISTOR, CHIP 1K 1/16W (1608)
R224	1-218-847-11	s	RESISTOR, CHIP 1K 1/16W (1608)
R225	1-218-823-11	s	RESISTOR,CHIP 100 1/16W (1608)
R226	1-218-855-11	s	RESISTOR,CHIP 2.2K 1/16W(1608)
R227	1-218-847-11	s	RESISTOR, CHIP 1K 1/16W (1608)
R228	1-218-843-11	s	RESISTOR,CHIP 680 1/16W (1608)
R229	1-218-835-11	s	RESISTOR,CHIP 330 1/16W (1608)
R230	1-218-835-11	s	RESISTOR,CHIP 330 1/16W (1608)
R231	1-218-843-11	s	RESISTOR,CHIP 680 1/16W (1608)
R232	1-218-847-11	s	RESISTOR, CHIP 1K 1/16W (1608)
R233	1-218-847-11	s	RESISTOR, CHIP 1K 1/16W (1608)
R234	1-218-823-11	s	RESISTOR,CHIP 100 1/16W (1608)
R235	1-218-823-11	s	RESISTOR,CHIP 100 1/16W (1608)
R236	1-218-847-11	s	RESISTOR, CHIP 1K 1/16W (1608)
R237	1-218-847-11	s	RESISTOR, CHIP 1K 1/16W (1608)
R238	1-218-847-11	s	RESISTOR, CHIP 1K 1/16W (1608)
R239	1-218-847-11	s	RESISTOR, CHIP 1K 1/16W (1608)
R240	1-218-835-11	s	RESISTOR,CHIP 330 1/16W (1608)
R241	1-218-855-11	s	RESISTOR,CHIP 2.2K 1/16W(1608)
R242	1-218-835-11	s	RESISTOR,CHIP 330 1/16W (1608)
R243	1-218-863-11	s	RESISTOR,CHIP 4.7K 1/16W(1608)
R244	1-218-847-11	s	RESISTOR, CHIP 1K 1/16W (1608)
R245	1-218-863-11	s	RESISTOR,CHIP 4.7K 1/16W(1608)
R246	1-218-855-11	s	RESISTOR,CHIP 2.2K 1/16W(1608)
R247	1-218-823-11	s	RESISTOR,CHIP 100 1/16W (1608)

(VPR-71/71P BOARD (for DSR-1800/P))

Ref. No. or Q'ty	Part No.	SP	Description
R248	1-218-863-11	s	RESISTOR,CHIP 4.7K 1/16W(1608)
R249	1-218-847-11	s	RESISTOR, CHIP 1K 1/16W (1608)
R250	1-216-857-11	s	RESISTOR,CHIP 1M 1/16W(1608)
R251	1-218-855-11	s	RESISTOR,CHIP 2.2K 1/16W(1608)
R252	1-218-863-11	s	RESISTOR,CHIP 4.7K 1/16W(1608)
R253	1-218-847-11	s	RESISTOR, CHIP 1K 1/16W (1608)
R254	1-218-847-11	s	RESISTOR, CHIP 1K 1/16W (1608)
R255	1-211-991-11	s	RESISTOR,CHIP 82 1/16W (1608)
R256	1-211-990-11	s	RESISTOR,CHIP 75 1/16W (1608)
R300	1-211-985-11	s	RESISTOR,CHIP 47 1/16W (1608)
R302	1-218-871-11	s	RESISTOR,CHIP 10K 1/16W (1608)
R303	1-218-871-11	s	RESISTOR,CHIP 10K 1/16W (1608)
R304	1-216-841-11	s	RESISTOR, CHIP 47K 1/16W 1608
R305	1-218-859-11	s	RESISTOR,CHIP 3.3K 1/16W(1608)
R306	1-218-859-11	s	RESISTOR,CHIP 3.3K 1/16W(1608)
R307	1-218-859-11	s	RESISTOR,CHIP 3.3K 1/16W(1608)
R308	1-218-879-11	s	RESISTOR,CHIP 22K 1/16W (1608)
R309	1-218-863-11	s	RESISTOR,CHIP 4.7K 1/16W(1608)
R310	1-218-871-11	s	RESISTOR,CHIP 10K 1/16W (1608)
R311	1-218-883-11	s	RESISTOR,CHIP 33K 1/16W (1608)
R312	1-218-869-11	s	RESISTOR,CHIP 8.2K 1/16W(1608)
R313	1-218-883-11	s	RESISTOR,CHIP 33K 1/16W (1608)
R315	1-218-879-11	s	RESISTOR,CHIP 22K 1/16W (1608)
R316	1-218-863-11	s	RESISTOR,CHIP 4.7K 1/16W(1608)
R317	1-218-831-11	s	RESISTOR, CHIP 220 1/16W(1608)
R318	1-218-831-11	s	RESISTOR, CHIP 220 1/16W(1608)
R319	1-218-831-11	s	RESISTOR, CHIP 220 1/16W(1608)
R320	1-218-831-11	s	RESISTOR, CHIP 220 1/16W(1608)
R321	1-218-831-11	s	RESISTOR, CHIP 220 1/16W(1608)
R322	1-218-831-11	s	RESISTOR, CHIP 220 1/16W(1608)
R323	1-218-847-11	s	RESISTOR, CHIP 1K 1/16W (1608)
R324	1-218-847-11	s	RESISTOR, CHIP 1K 1/16W (1608)
R325	1-218-847-11	s	RESISTOR, CHIP 1K 1/16W (1608)
R326	1-218-835-11	s	RESISTOR,CHIP 330 1/16W (1608)
R328	1-218-835-11	s	RESISTOR,CHIP 330 1/16W (1608)
R329	1-218-835-11	s	RESISTOR,CHIP 330 1/16W (1608)
R330	1-218-835-11	s	RESISTOR,CHIP 330 1/16W (1608)
R331	1-218-835-11	s	RESISTOR,CHIP 330 1/16W (1608)
R332	1-218-835-11	s	RESISTOR,CHIP 330 1/16W (1608)
R334	1-216-864-11	s	RESISTOR,CHIP 0 1/16W (1608)
R335	1-216-864-11	s	RESISTOR,CHIP 0 1/16W (1608)
R336	1-216-864-11	s	RESISTOR,CHIP 0 1/16W (1608)
R337	1-216-864-11	s	RESISTOR,CHIP 0 1/16W (1608)
R338	1-216-864-11	s	RESISTOR,CHIP 0 1/16W (1608)
R339	1-216-864-11	s	RESISTOR,CHIP 0 1/16W (1608)
R340	1-216-864-11	s	RESISTOR,CHIP 0 1/16W (1608)
R400	1-218-871-11	s	RESISTOR,CHIP 10K 1/16W (1608)
R401	1-218-871-11	s	RESISTOR,CHIP 10K 1/16W (1608)
R402	1-218-847-11	s	RESISTOR, CHIP 1K 1/16W (1608)
R403	1-218-849-11	s	RESISTOR,CHIP 1.2K 1/16W(1608)
R404	1-218-855-11	s	RESISTOR,CHIP 2.2K 1/16W(1608)
R405	1-218-855-11	s	RESISTOR,CHIP 2.2K 1/16W(1608)
R406	1-218-855-11	s	RESISTOR,CHIP 2.2K 1/16W(1608)
R407	1-218-871-11	s	RESISTOR,CHIP 10K 1/16W (1608)
R408	1-218-871-11	s	RESISTOR,CHIP 10K 1/16W (1608)
R409	1-218-847-11	s	RESISTOR, CHIP 1K 1/16W (1608)
R410	1-218-847-11	s	RESISTOR, CHIP 1K 1/16W (1608)
R411	1-218-847-11	s	RESISTOR, CHIP 1K 1/16W (1608)
R412	1-218-847-11	s	RESISTOR, CHIP 1K 1/16W (1608)

(VPR-71/71P BOARD (for DSR-1800/P))

Ref. No. or Q'ty	Part No.	SP	Description
R413	1-218-895-11	s	RESISTOR,CHIP 100K 1/16W(1608)
R414	1-218-823-11	s	RESISTOR,CHIP 100 1/16W (1608)
R415	1-218-847-11	s	RESISTOR, CHIP 1K 1/16W (1608)
R416	1-218-863-11	s	RESISTOR,CHIP 4.7K 1/16W(1608)
R417	1-218-847-11	s	RESISTOR, CHIP 1K 1/16W (1608)
R418	1-218-842-11	s	RESISTOR,CHIP 620 1/16W (1608)
R419	1-218-855-11	s	RESISTOR,CHIP 2.2K 1/16W(1608)
R420	1-218-855-11	s	RESISTOR,CHIP 2.2K 1/16W(1608)
R421	1-218-843-11	s	RESISTOR,CHIP 680 1/16W (1608)
R422	1-218-863-11	s	RESISTOR,CHIP 4.7K 1/16W(1608)
R423	1-216-857-11	s	RESISTOR,CHIP 1M 1/16W(1608)
R424	1-216-855-11	s	RESISTOR, CHIP 680K 1/16W 1608
R425	1-216-855-11	s	RESISTOR, CHIP 680K 1/16W 1608
R426	1-218-863-11	s	RESISTOR,CHIP 4.7K 1/16W(1608)
R427	1-218-871-11	s	RESISTOR,CHIP 10K 1/16W (1608)
R428	1-218-907-11	s	RESISTOR,CHIP 330K 1/16W(1608) [for DSR-1800P]
R429	1-218-895-11	s	RESISTOR,CHIP 100K 1/16W(1608) [for DSR-1800(UC), (J)]
R429	1-218-907-11	s	RESISTOR,CHIP 330K 1/16W(1608) [for DSR-1800P]
R430	1-218-863-11	s	RESISTOR,CHIP 4.7K 1/16W(1608)
R431	1-216-841-11	s	RESISTOR, CHIP 47K 1/16W 1608
R432	1-216-841-11	s	RESISTOR, CHIP 47K 1/16W 1608
R433	1-218-883-11	s	RESISTOR,CHIP 33K 1/16W (1608)
R434	1-218-883-11	s	RESISTOR,CHIP 33K 1/16W (1608)
R435	1-218-847-11	s	RESISTOR, CHIP 1K 1/16W (1608)
R436	1-218-903-11	s	RESISTOR,CHIP 220K 1/16W(1608)
R437	1-218-863-11	s	RESISTOR,CHIP 4.7K 1/16W(1608)
R438	1-218-847-11	s	RESISTOR, CHIP 1K 1/16W (1608)
R439	1-218-863-11	s	RESISTOR,CHIP 4.7K 1/16W(1608)
R440	1-218-823-11	s	RESISTOR,CHIP 100 1/16W (1608)
R441	1-218-859-11	s	RESISTOR,CHIP 3.3K 1/16W(1608)
R442	1-218-863-11	s	RESISTOR,CHIP 4.7K 1/16W(1608)
R443	1-218-823-11	s	RESISTOR,CHIP 100 1/16W (1608)
R444	1-218-883-11	s	RESISTOR,CHIP 33K 1/16W (1608)
R445	1-218-863-11	s	RESISTOR,CHIP 4.7K 1/16W(1608)
R446	1-216-855-11	s	RESISTOR, CHIP 680K 1/16W 1608
R447	1-218-895-11	s	RESISTOR,CHIP 100K 1/16W(1608)
R448	1-218-895-11	s	RESISTOR,CHIP 100K 1/16W(1608)
R449	1-211-985-11	s	RESISTOR,CHIP 47 1/16W (1608)
R450	1-216-803-11	s	RESISTOR,CHIP 33 1/16W (1608)
R451	1-218-847-11	s	RESISTOR, CHIP 1K 1/16W (1608)
R452	1-216-863-11	s	RESISTOR,CHIP 3.3M 1/16W 1608
R453	1-218-871-11	s	RESISTOR,CHIP 10K 1/16W (1608)
R454	1-218-871-11	s	RESISTOR,CHIP 10K 1/16W (1608)
R455	1-218-823-11	s	RESISTOR,CHIP 100 1/16W (1608)
R456	1-218-847-11	s	RESISTOR, CHIP 1K 1/16W (1608)
R458	1-216-864-11	s	RESISTOR,CHIP 0 1/16W (1608) [for DSR-1800P]
R459	1-216-864-11	s	RESISTOR,CHIP 0 1/16W (1608) [for DSR-1800P]
R460	1-211-985-11	s	RESISTOR,CHIP 47 1/16W (1608)
R461	1-211-985-11	s	RESISTOR,CHIP 47 1/16W (1608)
R462	1-218-851-11	s	RESISTOR,CHIP 1.5K 1/16W(1608)
R463	1-218-823-11	s	RESISTOR,CHIP 100 1/16W (1608)
R464	1-218-847-11	s	RESISTOR, CHIP 1K 1/16W (1608)
R465	1-218-847-11	s	RESISTOR, CHIP 1K 1/16W (1608)
R466	1-218-847-11	s	RESISTOR, CHIP 1K 1/16W (1608)
R467	1-218-847-11	s	RESISTOR, CHIP 1K 1/16W (1608)

(VPR-71/71P BOARD (for DSR-1800/P))

Ref. No. or Q'ty	Part No.	SP	Description
R500	1-218-847-11	s	RESISTOR, CHIP 1K 1/16W (1608)
R501	1-218-835-11	s	RESISTOR,CHIP 330 1/16W (1608)
R502	1-218-847-11	s	RESISTOR, CHIP 1K 1/16W (1608)
R503	1-218-847-11	s	RESISTOR, CHIP 1K 1/16W (1608)
R504	1-218-847-11	s	RESISTOR, CHIP 1K 1/16W (1608)
R505	1-218-847-11	s	RESISTOR, CHIP 1K 1/16W (1608)
R506	1-218-863-11	s	RESISTOR,CHIP 4.7K 1/16W(1608)
R507	1-218-863-11	s	RESISTOR,CHIP 4.7K 1/16W(1608)
R508	1-218-835-11	s	RESISTOR,CHIP 330 1/16W (1608)
R509	1-218-835-11	s	RESISTOR,CHIP 330 1/16W (1608)
R510	1-218-855-11	s	RESISTOR,CHIP 2.2K 1/16W(1608)
R511	1-218-835-11	s	RESISTOR,CHIP 330 1/16W (1608)
R512	1-218-863-11	s	RESISTOR,CHIP 4.7K 1/16W(1608)
R513	1-218-823-11	s	RESISTOR,CHIP 100 1/16W (1608)
R514	1-218-847-11	s	RESISTOR, CHIP 1K 1/16W (1608)
R515	1-218-863-11	s	RESISTOR,CHIP 4.7K 1/16W(1608)
R516	1-218-823-11	s	RESISTOR,CHIP 100 1/16W (1608)
R517	1-218-823-11	s	RESISTOR,CHIP 100 1/16W (1608)
R518	1-218-823-11	s	RESISTOR,CHIP 100 1/16W (1608)
R519	1-218-847-11	s	RESISTOR, CHIP 1K 1/16W (1608)
R520	1-218-855-11	s	RESISTOR,CHIP 2.2K 1/16W(1608)
R521	1-218-855-11	s	RESISTOR,CHIP 2.2K 1/16W(1608)
R522	1-218-835-11	s	RESISTOR,CHIP 330 1/16W (1608)
R523	1-218-847-11	s	RESISTOR, CHIP 1K 1/16W (1608)
R524	1-218-835-11	s	RESISTOR,CHIP 330 1/16W (1608)
R525	1-218-847-11	s	RESISTOR, CHIP 1K 1/16W (1608)
R526	1-218-851-11	s	RESISTOR,CHIP 1.5K 1/16W(1608)
R527	1-218-847-11	s	RESISTOR, CHIP 1K 1/16W (1608)
R528	1-218-851-11	s	RESISTOR,CHIP 1.5K 1/16W(1608)
R529	1-218-847-11	s	RESISTOR, CHIP 1K 1/16W (1608)
R530	1-218-859-11	s	RESISTOR,CHIP 3.3K 1/16W(1608)
R531	1-218-859-11	s	RESISTOR,CHIP 3.3K 1/16W(1608)
R532	1-218-895-11	s	RESISTOR,CHIP 100K 1/16W(1608)
R533	1-216-857-11	s	RESISTOR,CHIP 1M 1/16W(1608)
R534	1-218-855-11	s	RESISTOR,CHIP 2.2K 1/16W(1608)
R535	1-218-823-11	s	RESISTOR,CHIP 100 1/16W (1608)
R536	1-218-855-11	s	RESISTOR,CHIP 2.2K 1/16W(1608)
R537	1-218-823-11	s	RESISTOR,CHIP 100 1/16W (1608)
R538	1-218-847-11	s	RESISTOR, CHIP 1K 1/16W (1608)
R539	1-218-847-11	s	RESISTOR, CHIP 1K 1/16W (1608)
R540	1-218-863-11	s	RESISTOR,CHIP 4.7K 1/16W(1608)
R541	1-218-859-11	s	RESISTOR,CHIP 3.3K 1/16W(1608)
R542	1-218-823-11	s	RESISTOR,CHIP 100 1/16W (1608)
R543	1-218-871-11	s	RESISTOR,CHIP 10K 1/16W (1608)
R544	1-218-849-11	s	RESISTOR,CHIP 1.2K 1/16W(1608)
R545	1-218-849-11	s	RESISTOR,CHIP 1.2K 1/16W(1608)
R546	1-218-823-11	s	RESISTOR,CHIP 100 1/16W (1608)
R547	1-218-878-11	s	RESISTOR,CHIP 20K 1/16W (1608)
R548	1-218-878-11	s	RESISTOR,CHIP 20K 1/16W (1608)
R549	1-218-823-11	s	RESISTOR,CHIP 100 1/16W (1608)
R550	1-218-873-11	s	RESISTOR,CHIP 12K 1/16W (1608)
R551	1-218-878-11	s	RESISTOR,CHIP 20K 1/16W (1608)
R552	1-218-823-11	s	RESISTOR,CHIP 100 1/16W (1608)
R553	1-218-823-11	s	RESISTOR,CHIP 100 1/16W (1608)
R554	1-218-849-11	s	RESISTOR,CHIP 1.2K 1/16W(1608)
R555	1-216-803-11	s	RESISTOR,CHIP 33 1/16W (1608)
R557	1-216-864-11	s	RESISTOR,CHIP 0 1/16W (1608)
R559	1-216-803-11	s	RESISTOR,CHIP 33 1/16W (1608)
R560	1-211-985-11	s	RESISTOR,CHIP 47 1/16W (1608)

(VPR-71/71P BOARD (for DSR-1800/P))

Ref. No. or Q'ty	Part No.	SP	Description
R563	1-216-864-11	s	RESISTOR,CHIP 0 1/16W (1608)
R564	*1 1-218-830-11	s	RESISTOR,CHIP 200 1/16W (1608) [for DSR-1800(UC), (J)]
R564	*1 1-218-823-11	s	RESISTOR,CHIP 100 1/16W (1608) [for DSR-1800P]
R565	*1 1-218-830-11	s	RESISTOR,CHIP 200 1/16W (1608) [for DSR-1800(UC), (J)]
R565	*1 1-218-823-11	s	RESISTOR,CHIP 100 1/16W (1608) [for DSR-1800P]
R566	*1 1-218-824-11	s	RESISTOR,CHIP 110 1/16W (1608) [for DSR-1800(UC), (J)]
R566	*1 1-216-864-11	s	RESISTOR,CHIP 0 1/16W (1608) [for DSR-1800P]
R567	*1 1-218-824-11	s	RESISTOR,CHIP 110 1/16W (1608) [for DSR-1800(UC), (J)]
R567	*1 1-216-864-11	s	RESISTOR,CHIP 0 1/16W (1608) [for DSR-1800P]
R568	1-218-823-11	s	RESISTOR,CHIP 100 1/16W (1608)
R569	1-218-823-11	s	RESISTOR,CHIP 100 1/16W (1608)
R570	1-211-969-11	s	RESISTOR,CHIP 10 1/16W (1608)
R571	1-211-969-11	s	RESISTOR,CHIP 10 1/16W (1608)
R603	1-216-864-11	s	RESISTOR,CHIP 0 1/16W (1608)
R604	1-216-864-11	s	RESISTOR,CHIP 0 1/16W (1608)
R608	1-218-857-11	s	RESISTOR,CHIP 2.7K 1/16W(1608)
R609	1-218-895-11	s	RESISTOR,CHIP 100K 1/16W(1608)
R610	1-216-830-11	s	RESISTOR,CHIP 5.6K 1/16W 1608
R611	1-216-848-11	s	RESISTOR,CHIP 180K 1/16 (1608)
R612	1-218-847-11	s	RESISTOR, CHIP 1K 1/16W (1608)
R613	1-218-863-11	s	RESISTOR,CHIP 4.7K 1/16W(1608)
R614	1-216-855-11	s	RESISTOR, CHIP 680K 1/16W 1608
R615	1-216-848-11	s	RESISTOR,CHIP 180K 1/16 (1608)
R616	1-218-873-11	s	RESISTOR,CHIP 12K 1/16W (1608)
R617	1-218-879-11	s	RESISTOR,CHIP 22K 1/16W (1608)
R618	1-218-871-11	s	RESISTOR,CHIP 10K 1/16W (1608)
R619	1-218-871-11	s	RESISTOR,CHIP 10K 1/16W (1608)
R620	1-218-892-11	s	RESISTOR,CHIP 75K 1/16W (1608)
R621	1-216-853-11	s	RESISTOR,CHIP 470K 1/16W(1608)
R622	1-216-853-11	s	RESISTOR,CHIP 470K 1/16W(1608)
R623	1-218-889-11	s	RESISTOR,CHIP 56K 1/16W(1608)
R625	1-218-879-11	s	RESISTOR,CHIP 22K 1/16W (1608)
R626	1-218-839-11	s	RESISTOR,CHIP 470 1/16W (1608)
R627	1-218-847-11	s	RESISTOR, CHIP 1K 1/16W (1608)
R628	1-218-839-11	s	RESISTOR,CHIP 470 1/16W (1608)
R629	1-218-847-11	s	RESISTOR, CHIP 1K 1/16W (1608)
R630	1-218-863-11	s	RESISTOR,CHIP 4.7K 1/16W(1608)
R631	1-216-814-11	s	RESISTOR,CHIP 270 1/16W 1608
R632	1-218-863-11	s	RESISTOR,CHIP 4.7K 1/16W(1608)
R633	1-216-864-11	s	RESISTOR,CHIP 0 1/16W (1608)
R634	1-216-864-11	s	RESISTOR,CHIP 0 1/16W (1608) [for DSR-1800(UC), (J)]
R635	1-216-864-11	s	RESISTOR,CHIP 0 1/16W (1608) [for DSR-1800P]
R636	1-218-863-11	s	RESISTOR,CHIP 4.7K 1/16W(1608)
R637	1-216-814-11	s	RESISTOR,CHIP 270 1/16W 1608
R638	1-218-863-11	s	RESISTOR,CHIP 4.7K 1/16W(1608)
R639	1-218-883-11	s	RESISTOR,CHIP 33K 1/16W (1608)
R640	1-218-883-11	s	RESISTOR,CHIP 33K 1/16W (1608)
R641	1-216-864-11	s	RESISTOR,CHIP 0 1/16W (1608)
R643	1-216-864-11	s	RESISTOR,CHIP 0 1/16W (1608)
R644	1-216-855-11	s	RESISTOR, CHIP 680K 1/16W 1608

(VPR-71/71P BOARD (for DSR-1800/P))

Ref. No. or Q'ty	Part No.	SP	Description
R645	1-218-883-11	s	RESISTOR,CHIP 33K 1/16W (1608)
R646	1-218-883-11	s	RESISTOR,CHIP 33K 1/16W (1608)
R647	1-211-985-11	s	RESISTOR,CHIP 47 1/16W (1608)
R648	1-216-864-11	s	RESISTOR,CHIP 0 1/16W (1608)
R649	1-216-864-11	s	RESISTOR,CHIP 0 1/16W (1608)
R650	1-218-883-11	s	RESISTOR,CHIP 33K 1/16W (1608)
R651	1-218-847-11	s	RESISTOR, CHIP 1K 1/16W (1608)
R652	1-218-871-11	s	RESISTOR,CHIP 10K 1/16W (1608)
R655	1-216-864-11	s	RESISTOR,CHIP 0 1/16W (1608)
R656	1-216-864-11	s	RESISTOR,CHIP 0 1/16W (1608)
R657	1-218-883-11	s	RESISTOR,CHIP 33K 1/16W (1608)
R659	1-216-803-11	s	RESISTOR,CHIP 33 1/16W (1608)
R660	1-216-803-11	s	RESISTOR,CHIP 33 1/16W (1608)
R661	1-216-803-11	s	RESISTOR,CHIP 33 1/16W (1608)
R662	1-216-803-11	s	RESISTOR,CHIP 33 1/16W (1608)
R701	1-218-839-11	s	RESISTOR,CHIP 470 1/16W (1608)
R702	1-218-863-11	s	RESISTOR,CHIP 4.7K 1/16W(1608)
R703	1-218-871-11	s	RESISTOR,CHIP 10K 1/16W (1608)
R704	1-218-861-11	s	RESISTOR,CHIP 3.9K 1/16W(1608)
R705	1-218-871-11	s	RESISTOR,CHIP 10K 1/16W (1608)
R706	1-218-871-11	s	RESISTOR,CHIP 10K 1/16W (1608)
R707	1-218-847-11	s	RESISTOR, CHIP 1K 1/16W (1608)
R708	1-218-864-11	s	RESISTOR,CHIP 5.1K 1/16W(1608)
R709	1-218-864-11	s	RESISTOR,CHIP 5.1K 1/16W(1608)
R710	1-218-849-11	s	RESISTOR,CHIP 1.2K 1/16W(1608)
R711	1-218-849-11	s	RESISTOR,CHIP 1.2K 1/16W(1608)
R712	1-218-871-11	s	RESISTOR,CHIP 10K 1/16W (1608)
R713	1-218-871-11	s	RESISTOR,CHIP 10K 1/16W (1608)
R714	1-218-855-11	s	RESISTOR,CHIP 2.2K 1/16W(1608)
R715	1-218-861-11	s	RESISTOR,CHIP 3.9K 1/16W(1608)
R716	1-218-871-11	s	RESISTOR,CHIP 10K 1/16W (1608)
R717	1-218-883-11	s	RESISTOR,CHIP 33K 1/16W (1608)
R718	1-218-871-11	s	RESISTOR,CHIP 10K 1/16W (1608)
R719	1-218-871-11	s	RESISTOR,CHIP 10K 1/16W (1608)
R720	1-218-883-11	s	RESISTOR,CHIP 33K 1/16W (1608)
R721	1-216-857-11	s	RESISTOR,CHIP 1M 1/16W(1608)
R722	1-216-857-11	s	RESISTOR,CHIP 1M 1/16W(1608)
R723	1-218-883-11	s	RESISTOR,CHIP 33K 1/16W (1608)
R724	1-218-883-11	s	RESISTOR,CHIP 33K 1/16W (1608)
R725	1-218-851-11	s	RESISTOR,CHIP 1.5K 1/16W(1608)
R726	1-218-851-11	s	RESISTOR,CHIP 1.5K 1/16W(1608)
R727	1-218-871-11	s	RESISTOR,CHIP 10K 1/16W (1608)
R728	1-218-871-11	s	RESISTOR,CHIP 10K 1/16W (1608)
R729	1-218-879-11	s	RESISTOR,CHIP 22K 1/16W (1608)
R730	1-216-857-11	s	RESISTOR,CHIP 1M 1/16W(1608)
R731	1-218-883-11	s	RESISTOR,CHIP 33K 1/16W (1608)
R735	1-218-857-11	s	RESISTOR,CHIP 2.7K 1/16W(1608)
R736	1-218-875-11	s	RESISTOR,CHIP 15K 1/16W (1608)
R737	1-218-873-11	s	RESISTOR,CHIP 12K 1/16W (1608)
R738	1-218-835-11	s	RESISTOR,CHIP 330 1/16W (1608)
R739	1-218-835-11	s	RESISTOR,CHIP 330 1/16W (1608)
R740	1-218-835-11	s	RESISTOR,CHIP 330 1/16W (1608)
R741	1-218-835-11	s	RESISTOR,CHIP 330 1/16W (1608)
R742	1-218-835-11	s	RESISTOR,CHIP 330 1/16W (1608)
R743	1-218-835-11	s	RESISTOR,CHIP 330 1/16W (1608)
R744	1-218-847-11	s	RESISTOR, CHIP 1K 1/16W (1608)
R745	1-218-847-11	s	RESISTOR, CHIP 1K 1/16W (1608)
R746	1-218-847-11	s	RESISTOR, CHIP 1K 1/16W (1608)
R747	1-218-847-11	s	RESISTOR, CHIP 1K 1/16W (1608)

(VPR-71/71P BOARD (for DSR-1800/P))

Ref. No. or Q'ty	Part No.	SP	Description
R748	1-218-823-11	s	RESISTOR,CHIP 100 1/16W (1608)
R749	1-218-847-11	s	RESISTOR, CHIP 1K 1/16W (1608)
R750	1-218-847-11	s	RESISTOR, CHIP 1K 1/16W (1608)
R751	1-218-849-11	s	RESISTOR,CHIP 1.2K 1/16W(1608)
R752	1-218-863-11	s	RESISTOR,CHIP 4.7K 1/16W(1608)
R753	1-218-823-11	s	RESISTOR,CHIP 100 1/16W (1608)
R754	1-218-847-11	s	RESISTOR, CHIP 1K 1/16W (1608)
R755	1-218-847-11	s	RESISTOR, CHIP 1K 1/16W (1608)
R756	1-218-847-11	s	RESISTOR, CHIP 1K 1/16W (1608)
R757	1-218-835-11	s	RESISTOR,CHIP 330 1/16W (1608)
R758	1-218-823-11	s	RESISTOR,CHIP 100 1/16W (1608)
R759	1-218-863-11	s	RESISTOR,CHIP 4.7K 1/16W(1608)
R760	1-216-864-11	s	RESISTOR,CHIP 0 1/16W (1608) [for DSR-1800(UC), (J)]
R760	1-218-829-11	s	RESISTOR,CHIP 180 1/16W (1608) [for DSR-1800P]
R761	1-218-841-11	s	RESISTOR,CHIP 560 1/16W (1608) [for DSR-1800(UC), (J)]
R761	1-218-836-11	s	RESISTOR,CHIP 360 1/16W (1608) [for DSR-1800P]
R762	1-218-839-11	s	RESISTOR,CHIP 470 1/16W (1608)
R763	1-218-839-11	s	RESISTOR,CHIP 470 1/16W (1608)
R764	1-211-990-11	s	RESISTOR,CHIP 75 1/16W (1608)
R765	1-218-823-11	s	RESISTOR,CHIP 100 1/16W (1608)
R766	1-218-847-11	s	RESISTOR, CHIP 1K 1/16W (1608)
R767	1-218-847-11	s	RESISTOR, CHIP 1K 1/16W (1608)
R768	1-218-849-11	s	RESISTOR,CHIP 1.2K 1/16W(1608)
R769	1-218-863-11	s	RESISTOR,CHIP 4.7K 1/16W(1608)
R770	1-218-823-11	s	RESISTOR,CHIP 100 1/16W (1608)
R771	1-218-847-11	s	RESISTOR, CHIP 1K 1/16W (1608)
R772	1-218-847-11	s	RESISTOR, CHIP 1K 1/16W (1608)
R773	1-218-847-11	s	RESISTOR, CHIP 1K 1/16W (1608)
R774	1-218-835-11	s	RESISTOR,CHIP 330 1/16W (1608)
R775	1-218-823-11	s	RESISTOR,CHIP 100 1/16W (1608)
R776	1-218-863-11	s	RESISTOR,CHIP 4.7K 1/16W(1608)
R777	1-216-864-11	s	RESISTOR,CHIP 0 1/16W (1608) [for DSR-1800(UC), (J)]
R777	1-218-829-11	s	RESISTOR,CHIP 180 1/16W (1608) [for DSR-1800P]
R778	1-218-841-11	s	RESISTOR,CHIP 560 1/16W (1608) [for DSR-1800(UC), (J)]
R778	1-218-836-11	s	RESISTOR,CHIP 360 1/16W (1608) [for DSR-1800P]
R779	1-218-839-11	s	RESISTOR,CHIP 470 1/16W (1608)
R780	1-218-839-11	s	RESISTOR,CHIP 470 1/16W (1608)
R781	1-211-990-11	s	RESISTOR,CHIP 75 1/16W (1608)
R782	1-218-883-11	s	RESISTOR,CHIP 33K 1/16W (1608)
R783	1-216-864-11	s	RESISTOR,CHIP 0 1/16W (1608)
R790	1-218-871-11	s	RESISTOR,CHIP 10K 1/16W (1608)
R791	1-218-823-11	s	RESISTOR,CHIP 100 1/16W (1608)
R792	1-218-875-11	s	RESISTOR,CHIP 15K 1/16W (1608)
R793	1-218-847-11	s	RESISTOR, CHIP 1K 1/16W (1608)
R798 *1	1-218-847-11	s	RESISTOR, CHIP 1K 1/16W (1608)
R799 *1	1-218-847-11	s	RESISTOR, CHIP 1K 1/16W (1608)
R800	1-218-847-11	s	RESISTOR, CHIP 1K 1/16W (1608)
R801	1-216-841-11	s	RESISTOR, CHIP 47K 1/16W 1608
R802	1-218-847-11	s	RESISTOR, CHIP 1K 1/16W (1608)
R803	1-218-839-11	s	RESISTOR,CHIP 470 1/16W (1608)
R804	1-218-835-11	s	RESISTOR,CHIP 330 1/16W (1608)

(VPR-71/71P BOARD (for DSR-1800/P))

Ref. No. or Q'ty	Part No.	SP	Description
R805	1-218-864-11	s	RESISTOR,CHIP 5.1K 1/16W(1608) [for DSR-1800(UC), (J)]
R805	1-218-871-11	s	RESISTOR,CHIP 10K 1/16W (1608) [for DSR-1800P]
R806	1-218-873-11	s	RESISTOR,CHIP 12K 1/16W (1608)
R807	1-218-879-11	s	RESISTOR,CHIP 22K 1/16W (1608)
R808	1-218-873-11	s	RESISTOR,CHIP 12K 1/16W (1608)
R809	1-218-879-11	s	RESISTOR,CHIP 22K 1/16W (1608)
R810	1-216-857-11	s	RESISTOR,CHIP 1M 1/16W(1608)
R811	1-216-857-11	s	RESISTOR,CHIP 1M 1/16W(1608)
R812	1-218-847-11	s	RESISTOR, CHIP 1K 1/16W (1608)
R813	1-218-847-11	s	RESISTOR, CHIP 1K 1/16W (1608)
R814	1-218-883-11	s	RESISTOR,CHIP 33K 1/16W (1608) [for DSR-1800(UC), (J)]
R814	1-218-878-11	s	RESISTOR,CHIP 20K 1/16W (1608) [for DSR-1800P]
R815	1-218-847-11	s	RESISTOR, CHIP 1K 1/16W (1608)
R816	1-216-841-11	s	RESISTOR, CHIP 47K 1/16W 1608
R817	1-218-847-11	s	RESISTOR, CHIP 1K 1/16W (1608)
R818	1-216-841-11	s	RESISTOR, CHIP 47K 1/16W 1608
R819	1-218-847-11	s	RESISTOR, CHIP 1K 1/16W (1608)
R820	1-218-847-11	s	RESISTOR, CHIP 1K 1/16W (1608)
R821	1-218-863-11	s	RESISTOR,CHIP 4.7K 1/16W(1608)
R822	1-218-863-11	s	RESISTOR,CHIP 4.7K 1/16W(1608)
R823	1-218-847-11	s	RESISTOR, CHIP 1K 1/16W (1608)
R824	1-218-847-11	s	RESISTOR, CHIP 1K 1/16W (1608)
R825	1-218-847-11	s	RESISTOR, CHIP 1K 1/16W (1608)
R826	1-218-879-11	s	RESISTOR,CHIP 22K 1/16W (1608)
R827	1-218-871-11	s	RESISTOR,CHIP 10K 1/16W (1608)
R828	1-218-847-11	s	RESISTOR, CHIP 1K 1/16W (1608)
R829	1-218-879-11	s	RESISTOR,CHIP 22K 1/16W (1608)
R830	1-218-823-11	s	RESISTOR,CHIP 100 1/16W (1608)
R831	1-218-857-11	s	RESISTOR,CHIP 2.7K 1/16W(1608)
R832	1-218-855-11	s	RESISTOR,CHIP 2.2K 1/16W(1608)
R833	1-218-855-11	s	RESISTOR,CHIP 2.2K 1/16W(1608)
R834	1-218-895-11	s	RESISTOR,CHIP 100K 1/16W(1608)
R835	1-218-847-11	s	RESISTOR, CHIP 1K 1/16W (1608)
R836	1-218-847-11	s	RESISTOR, CHIP 1K 1/16W (1608)
R837	1-218-847-11	s	RESISTOR, CHIP 1K 1/16W (1608)
R838	1-218-847-11	s	RESISTOR, CHIP 1K 1/16W (1608)
R839	1-218-847-11	s	RESISTOR, CHIP 1K 1/16W (1608)
R840	1-218-835-11	s	RESISTOR,CHIP 330 1/16W (1608)
R841	1-218-835-11	s	RESISTOR,CHIP 330 1/16W (1608)
R842	1-218-847-11	s	RESISTOR, CHIP 1K 1/16W (1608)
R843	1-218-847-11	s	RESISTOR, CHIP 1K 1/16W (1608)
R844	1-218-847-11	s	RESISTOR, CHIP 1K 1/16W (1608)
R845	1-218-847-11	s	RESISTOR, CHIP 1K 1/16W (1608)
R846	1-218-847-11	s	RESISTOR, CHIP 1K 1/16W (1608)
R847	1-218-855-11	s	RESISTOR,CHIP 2.2K 1/16W(1608)
R848	1-218-843-11	s	RESISTOR,CHIP 680 1/16W (1608)
R849	1-218-859-11	s	RESISTOR,CHIP 3.3K 1/16W(1608)
R850	1-218-847-11	s	RESISTOR, CHIP 1K 1/16W (1608) [for DSR-1800P]
R851	1-218-857-11	s	RESISTOR,CHIP 2.7K 1/16W(1608)
R852	1-218-855-11	s	RESISTOR,CHIP 2.2K 1/16W(1608)
R853	1-218-855-11	s	RESISTOR,CHIP 2.2K 1/16W(1608)
R854	1-218-855-11	s	RESISTOR,CHIP 2.2K 1/16W(1608)
R855	1-211-985-11	s	RESISTOR,CHIP 47 1/16W (1608)
R856	1-218-871-11	s	RESISTOR,CHIP 10K 1/16W (1608)
R857	1-218-855-11	s	RESISTOR,CHIP 2.2K 1/16W(1608)

(VPR-71/71P BOARD (for DSR-1800/P))

Ref. No. or Q'ty	Part No.	SP	Description
R858	1-218-855-11	s	RESISTOR,CHIP 2.2K 1/16W(1608)
R859	1-218-863-11	s	RESISTOR,CHIP 4.7K 1/16W(1608)
R860	1-218-863-11	s	RESISTOR,CHIP 4.7K 1/16W(1608)
R862	1-218-847-11	s	RESISTOR, CHIP 1K 1/16W (1608)
R900	1-218-855-11	s	RESISTOR,CHIP 2.2K 1/16W(1608)
R901	1-218-823-11	s	RESISTOR,CHIP 100 1/16W (1608)
R902	1-218-855-11	s	RESISTOR,CHIP 2.2K 1/16W(1608)
R903	1-218-855-11	s	RESISTOR,CHIP 2.2K 1/16W(1608)
R904	1-218-839-11	s	RESISTOR,CHIP 470 1/16W (1608)
R905	1-218-849-11	s	RESISTOR,CHIP 1.2K 1/16W(1608)
R906	1-218-839-11	s	RESISTOR,CHIP 470 1/16W (1608)
R907	1-218-841-11	s	RESISTOR,CHIP 560 1/16W (1608)
R908	1-218-839-11	s	RESISTOR,CHIP 470 1/16W (1608)
R909	1-218-839-11	s	RESISTOR,CHIP 470 1/16W (1608)
R910	1-211-990-11	s	RESISTOR,CHIP 75 1/16W (1608)
R911	1-218-875-11	s	RESISTOR,CHIP 15K 1/16W (1608)
R912	1-218-889-11	s	RESISTOR,CHIP 56K 1/16W(1608)
R913	1-211-990-11	s	RESISTOR,CHIP 75 1/16W (1608)
R914	1-211-990-11	s	RESISTOR,CHIP 75 1/16W (1608)
R915	1-218-871-11	s	RESISTOR,CHIP 10K 1/16W (1608)
R916	1-218-871-11	s	RESISTOR,CHIP 10K 1/16W (1608)
R917	1-218-823-11	s	RESISTOR,CHIP 100 1/16W (1608)
R918	1-218-847-11	s	RESISTOR, CHIP 1K 1/16W (1608)
R919	1-218-847-11	s	RESISTOR, CHIP 1K 1/16W (1608)
R920	1-218-849-11	s	RESISTOR,CHIP 1.2K 1/16W(1608)
R921	1-218-847-11	s	RESISTOR, CHIP 1K 1/16W (1608)
R922	1-218-855-11	s	RESISTOR,CHIP 2.2K 1/16W(1608)
R923	1-218-847-11	s	RESISTOR, CHIP 1K 1/16W (1608)
R924	1-218-847-11	s	RESISTOR, CHIP 1K 1/16W (1608)
R925	1-218-851-11	s	RESISTOR,CHIP 1.5K 1/16W(1608)
R926	1-218-855-11	s	RESISTOR,CHIP 2.2K 1/16W(1608)
R927	1-218-855-11	s	RESISTOR,CHIP 2.2K 1/16W(1608)
R928	1-218-839-11	s	RESISTOR,CHIP 470 1/16W (1608)
R929	1-218-860-11	s	RESISTOR,CHIP 3.6K 1/16W(1608)
R930	1-211-990-11	s	RESISTOR,CHIP 75 1/16W (1608)
R931	1-218-863-11	s	RESISTOR,CHIP 4.7K 1/16W(1608)
R932	1-218-863-11	s	RESISTOR,CHIP 4.7K 1/16W(1608)
R933	1-218-847-11	s	RESISTOR, CHIP 1K 1/16W (1608)
R934	1-218-831-11	s	RESISTOR, CHIP 220 1/16W(1608)
R935	1-218-847-11	s	RESISTOR, CHIP 1K 1/16W (1608)
R936	1-218-847-11	s	RESISTOR, CHIP 1K 1/16W (1608)
R937	1-218-879-11	s	RESISTOR,CHIP 22K 1/16W (1608)
R938	1-218-847-11	s	RESISTOR, CHIP 1K 1/16W (1608)
R939	1-218-863-11	s	RESISTOR,CHIP 4.7K 1/16W(1608)
R940	1-218-823-11	s	RESISTOR,CHIP 100 1/16W (1608)
R941	1-218-843-11	s	RESISTOR,CHIP 680 1/16W (1608) [for DSR-1800(UC), (J)]
R941	*1 1-218-842-11	s	RESISTOR,CHIP 620 1/16W (1608) [for DSR-1800P]
R942	1-218-823-11	s	RESISTOR,CHIP 100 1/16W (1608)
R943	1-218-843-11	s	RESISTOR,CHIP 680 1/16W (1608)
R943	*1 1-218-842-11	s	RESISTOR,CHIP 620 1/16W (1608) [for DSR-1800(UC), (J)]
R943	*1 1-218-845-11	s	RESISTOR,CHIP 820 1/16W (1608) [for DSR-1800P]
R944	1-216-853-11	s	RESISTOR,CHIP 470K 1/16W(1608)
R945	1-218-847-11	s	RESISTOR, CHIP 1K 1/16W (1608)
R946	1-218-847-11	s	RESISTOR, CHIP 1K 1/16W (1608)
R947	1-218-847-11	s	RESISTOR, CHIP 1K 1/16W (1608)
R948	1-218-855-11	s	RESISTOR,CHIP 2.2K 1/16W(1608)

(VPR-71/71P BOARD (for DSR-1800/P))

Ref. No. or Q'ty	Part No.	SP	Description
R949	1-218-871-11	s	RESISTOR,CHIP 10K 1/16W (1608)
R950	1-218-851-11	s	RESISTOR,CHIP 1.5K 1/16W(1608)
R952	1-218-860-11	s	RESISTOR,CHIP 3.6K 1/16W(1608)
R953	1-218-871-11	s	RESISTOR,CHIP 10K 1/16W (1608)
R954	1-218-863-11	s	RESISTOR,CHIP 4.7K 1/16W(1608)
R955	1-218-847-11	s	RESISTOR, CHIP 1K 1/16W (1608)
R956	1-218-849-11	s	RESISTOR,CHIP 1.2K 1/16W(1608)
R957	1-218-847-11	s	RESISTOR, CHIP 1K 1/16W (1608)
R958	1-211-990-11	s	RESISTOR,CHIP 75 1/16W (1608)
R959	1-218-895-11	s	RESISTOR,CHIP 100K 1/16W(1608)
R960	1-218-879-11	s	RESISTOR,CHIP 22K 1/16W (1608)
R961	1-218-841-11	s	RESISTOR,CHIP 560 1/16W (1608)
R962	1-218-855-11	s	RESISTOR,CHIP 2.2K 1/16W(1608)
R963 *1	1-218-840-11	s	RESISTOR,CHIP 510 1/16W (1608)
R964 *1	1-218-840-11	s	RESISTOR,CHIP 510 1/16W (1608) [for DSR-1800(UC), (J)]
R964 *1	1-218-832-11	s	RESISTOR,CHIP 240 1/16W (1608) [for DSR-1800P]
R1000	1-218-857-11	s	RESISTOR,CHIP 2.7K 1/16W(1608)
R1001	1-211-990-11	s	RESISTOR,CHIP 75 1/16W (1608)
R1002	1-216-841-11	s	RESISTOR, CHIP 47K 1/16W 1608
R1003	1-218-857-11	s	RESISTOR,CHIP 2.7K 1/16W(1608) [for DSR-1800(UC), (J)]
R1003	1-218-851-11	s	RESISTOR,CHIP 1.5K 1/16W(1608) [for DSR-1800P]
R1004	1-218-871-11	s	RESISTOR,CHIP 10K 1/16W (1608)
R1005	1-218-847-11	s	RESISTOR, CHIP 1K 1/16W (1608)
R1006	1-218-871-11	s	RESISTOR,CHIP 10K 1/16W (1608)
R1007	1-218-839-11	s	RESISTOR,CHIP 470 1/16W (1608)
R1008	1-218-847-11	s	RESISTOR, CHIP 1K 1/16W (1608)
R1009	1-218-847-11	s	RESISTOR, CHIP 1K 1/16W (1608)
R1010	1-218-847-11	s	RESISTOR, CHIP 1K 1/16W (1608)
R1011	1-218-855-11	s	RESISTOR,CHIP 2.2K 1/16W(1608)
R1012	1-218-851-11	s	RESISTOR,CHIP 1.5K 1/16W (1608) [for DSR-1800(UC), (J)]
R1012 *1	1-218-853-11	s	RESISTOR,CHIP 1.8K 1/16W(1608) [for DSR-1800(UC), (J)]
R1012	1-218-851-11	s	RESISTOR,CHIP 1.5K 1/16W(1608) [for DSR-1800P]
R1013	1-218-851-11	s	RESISTOR,CHIP 1.5K 1/16W(1608)
R1014	1-218-871-11	s	RESISTOR,CHIP 10K 1/16W (1608)
R1015	1-211-985-11	s	RESISTOR,CHIP 47 1/16W (1608)
R1016	1-218-857-11	s	RESISTOR,CHIP 2.7K 1/16W(1608)
R1017	1-218-857-11	s	RESISTOR,CHIP 2.7K 1/16W(1608)
R1018	1-216-820-11	s	RESISTOR, CHIP 820 1/16W 1608
R1019	1-211-990-11	s	RESISTOR,CHIP 75 1/16W (1608)
R1020	1-218-857-11	s	RESISTOR,CHIP 2.7K 1/16W(1608)
R1021	1-216-855-11	s	RESISTOR, CHIP 680K 1/16W 1608
R1022	1-218-847-11	s	RESISTOR, CHIP 1K 1/16W (1608)
R1023	1-218-857-11	s	RESISTOR,CHIP 2.7K 1/16W(1608)
R1024	1-218-823-11	s	RESISTOR,CHIP 100 1/16W (1608)
R1025	1-218-875-11	s	RESISTOR,CHIP 15K 1/16W (1608)
R1026	1-218-875-11	s	RESISTOR,CHIP 15K 1/16W (1608)
R1027	1-216-801-11	s	RESISTOR,CHIP 22 1/16W (1608)
R1028	1-218-863-11	s	RESISTOR,CHIP 4.7K 1/16W(1608)
R1029	1-218-843-11	s	RESISTOR,CHIP 680 1/16W (1608)
R1030	1-218-873-11	s	RESISTOR,CHIP 12K 1/16W (1608)
R1037 *1	1-218-831-11	s	RESISTOR, CHIP 220 1/16W(1608) [for DSR-1800(UC), (J)]

(VPR-71/71P BOARD (for DSR-1800/P))

Ref. No. or Q'ty	Part No.	SP	Description
R1037 *1	1-218-840-11	s	RESISTOR,CHIP 510 1/16W (1608) [for DSR-1800P]
R1100	1-218-883-11	s	RESISTOR,CHIP 33K 1/16W (1608)
R1100 *1	1-218-892-11	s	RESISTOR,CHIP 75K 1/16W (1608)
R1101	1-218-883-11	s	RESISTOR,CHIP 33K 1/16W (1608)
R1101 *1	1-218-892-11	s	RESISTOR,CHIP 75K 1/16W (1608)
R1102	1-218-883-11	s	RESISTOR,CHIP 33K 1/16W (1608)
R1102 *1	1-218-892-11	s	RESISTOR,CHIP 75K 1/16W (1608)
R1103	1-218-883-11	s	RESISTOR,CHIP 33K 1/16W (1608)
R1103 *1	1-218-892-11	s	RESISTOR,CHIP 75K 1/16W (1608)
R1104	1-218-871-11	s	RESISTOR,CHIP 10K 1/16W (1608)
R1105	1-218-871-11	s	RESISTOR,CHIP 10K 1/16W (1608)
R1106	1-218-871-11	s	RESISTOR,CHIP 10K 1/16W (1608)
R1107	1-218-871-11	s	RESISTOR,CHIP 10K 1/16W (1608)
R1108	1-218-871-11	s	RESISTOR,CHIP 10K 1/16W (1608)
R1109	1-218-871-11	s	RESISTOR,CHIP 10K 1/16W (1608)
R1110	1-218-871-11	s	RESISTOR,CHIP 10K 1/16W (1608)
R1111	1-218-871-11	s	RESISTOR,CHIP 10K 1/16W (1608)
R1112	1-218-871-11	s	RESISTOR,CHIP 10K 1/16W (1608)
R1112 *1	1-218-878-11	s	RESISTOR,CHIP 20K 1/16W (1608)
R1113	1-218-871-11	s	RESISTOR,CHIP 10K 1/16W (1608)
R1113 *1	1-218-878-11	s	RESISTOR,CHIP 20K 1/16W (1608)
R1114	1-218-871-11	s	RESISTOR,CHIP 10K 1/16W (1608)
R1114 *1	1-218-878-11	s	RESISTOR,CHIP 20K 1/16W (1608)
R1115	1-218-871-11	s	RESISTOR,CHIP 10K 1/16W (1608)
R1115 *1	1-218-878-11	s	RESISTOR,CHIP 20K 1/16W (1608)
R1116	1-218-871-11	s	RESISTOR,CHIP 10K 1/16W (1608) [for DSR-1800P]
R1117	1-218-875-11	s	RESISTOR,CHIP 15K 1/16W (1608) [for DSR-1800(UC), (J)]
R1117	1-218-867-11	s	RESISTOR,CHIP 6.8K 1/16W(1608) [for DSR-1800P]
R1118	1-218-873-11	s	RESISTOR,CHIP 12K 1/16W (1608)
R1119	1-216-864-11	s	RESISTOR,CHIP 0 1/16W (1608)
R1120	1-216-864-11	s	RESISTOR,CHIP 0 1/16W (1608)
R1121	1-218-863-11	s	RESISTOR,CHIP 4.7K 1/16W(1608)
R1122	1-218-849-11	s	RESISTOR,CHIP 1.2K 1/16W(1608)
R1125	1-218-855-11	s	RESISTOR,CHIP 2.2K 1/16W(1608)
R1126	1-216-864-11	s	RESISTOR,CHIP 0 1/16W (1608)
R1127	1-218-871-11	s	RESISTOR,CHIP 10K 1/16W (1608)
R1128	1-218-873-11	s	RESISTOR,CHIP 12K 1/16W (1608)
R1129	1-218-879-11	s	RESISTOR,CHIP 22K 1/16W (1608)
R1130	1-218-869-11	s	RESISTOR,CHIP 8.2K 1/16W(1608)
R1131	1-218-883-11	s	RESISTOR,CHIP 33K 1/16W (1608)
R1132	1-218-847-11	s	RESISTOR, CHIP 1K 1/16W (1608)
R1133	1-218-885-11	s	RESISTOR,CHIP 39K 1/16W (1608)
R1134	1-218-847-11	s	RESISTOR, CHIP 1K 1/16W (1608)
R1135	1-218-879-11	s	RESISTOR,CHIP 22K 1/16W (1608)
R1136	1-218-839-11	s	RESISTOR,CHIP 470 1/16W (1608)
R1137	1-218-883-11	s	RESISTOR,CHIP 33K 1/16W (1608)
R1138	1-218-895-11	s	RESISTOR,CHIP 100K 1/16W(1608)
R1140	1-218-823-11	s	RESISTOR,CHIP 100 1/16W (1608)
R1142	1-218-873-11	s	RESISTOR,CHIP 12K 1/16W (1608)
R1143	1-218-873-11	s	RESISTOR,CHIP 12K 1/16W (1608)
R1144	1-218-857-11	s	RESISTOR,CHIP 2.7K 1/16W(1608)
R1145	1-218-851-11	s	RESISTOR,CHIP 1.5K 1/16W(1608)
R1146	1-218-843-11	s	RESISTOR,CHIP 680 1/16W (1608)
R1147	1-218-847-11	s	RESISTOR, CHIP 1K 1/16W (1608)
R1148	1-218-855-11	s	RESISTOR,CHIP 2.2K 1/16W(1608)

(VPR-71/71P BOARD (for DSR-1800/P))

Ref. No. or Q'ty	Part No.	SP	Description
R1149	1-218-855-11	s	RESISTOR,CHIP 2.2K 1/16W(1608)
R1150	1-218-851-11	s	RESISTOR,CHIP 1.5K 1/16W(1608)
R1151	1-218-823-11	s	RESISTOR,CHIP 100 1/16W (1608)
R1152	1-218-855-11	s	RESISTOR,CHIP 2.2K 1/16W(1608)
R1153	1-218-855-11	s	RESISTOR,CHIP 2.2K 1/16W(1608)
R1154	1-218-857-11	s	RESISTOR,CHIP 2.7K 1/16W(1608)
R1155	1-218-857-11	s	RESISTOR,CHIP 2.7K 1/16W(1608)
R1202	1-218-871-11	s	RESISTOR,CHIP 10K 1/16W (1608)
R1203	1-216-864-11	s	RESISTOR,CHIP 0 1/16W (1608)
R1204	1-216-864-11	s	RESISTOR,CHIP 0 1/16W (1608)
R1205	1-216-864-11	s	RESISTOR,CHIP 0 1/16W (1608)
R1206	1-216-864-11	s	RESISTOR,CHIP 0 1/16W (1608)
R1207	1-216-864-11	s	RESISTOR,CHIP 0 1/16W (1608)
R1208	1-216-864-11	s	RESISTOR,CHIP 0 1/16W (1608)
R1209	1-218-863-11	s	RESISTOR,CHIP 4.7K 1/16W(1608)
R1210	1-218-847-11	s	RESISTOR, CHIP 1K 1/16W (1608)
R1211	1-218-847-11	s	RESISTOR, CHIP 1K 1/16W (1608)
R1212	1-218-835-11	s	RESISTOR,CHIP 330 1/16W (1608)
R1213	1-218-847-11	s	RESISTOR, CHIP 1K 1/16W (1608)
R1214	1-218-847-11	s	RESISTOR, CHIP 1K 1/16W (1608)
R1215	1-216-843-11	s	RESISTOR,CHIP 68K 1/16W (1608)
R1216	1-218-847-11	s	RESISTOR, CHIP 1K 1/16W (1608)
R1217	1-218-895-11	s	RESISTOR,CHIP 100K 1/16W(1608) [for DSR-1800(UC), (J)]
R1218	1-216-864-11	s	RESISTOR,CHIP 0 1/16W (1608) [for DSR-1800P]
R1219	1-218-895-11	s	RESISTOR,CHIP 100K 1/16W(1608) [for DSR-1800(UC), (J)]
R1220	1-216-864-11	s	RESISTOR,CHIP 0 1/16W (1608) [for DSR-1800P]
R1221	1-218-863-11	s	RESISTOR,CHIP 4.7K 1/16W(1608)
R1222	1-218-847-11	s	RESISTOR, CHIP 1K 1/16W (1608)
R1223	1-218-871-11	s	RESISTOR,CHIP 10K 1/16W (1608)
R1224	1-218-871-11	s	RESISTOR,CHIP 10K 1/16W (1608)
R1225	1-218-863-11	s	RESISTOR,CHIP 4.7K 1/16W(1608)
R1226	1-218-883-11	s	RESISTOR,CHIP 33K 1/16W (1608)
R1228	1-218-871-11	s	RESISTOR,CHIP 10K 1/16W (1608)
R1229	1-218-871-11	s	RESISTOR,CHIP 10K 1/16W (1608)
R1230	1-218-871-11	s	RESISTOR,CHIP 10K 1/16W (1608)
R1231	1-218-863-11	s	RESISTOR,CHIP 4.7K 1/16W(1608)
R1232	1-218-883-11	s	RESISTOR,CHIP 33K 1/16W (1608)
R1233	1-218-883-11	s	RESISTOR,CHIP 33K 1/16W (1608)
R1234	1-216-864-11	s	RESISTOR,CHIP 0 1/16W (1608)
R1235	1-216-864-11	s	RESISTOR,CHIP 0 1/16W (1608)
R1236	1-216-864-11	s	RESISTOR,CHIP 0 1/16W (1608)
R1237	1-216-864-11	s	RESISTOR,CHIP 0 1/16W (1608)
R1238	1-218-847-11	s	RESISTOR, CHIP 1K 1/16W (1608)
R1239	1-216-864-11	s	RESISTOR,CHIP 0 1/16W (1608)
R1240	1-216-864-11	s	RESISTOR,CHIP 0 1/16W (1608)
R1241	1-216-864-11	s	RESISTOR,CHIP 0 1/16W (1608)
R1242	1-216-864-11	s	RESISTOR,CHIP 0 1/16W (1608)
R1243	1-216-843-11	s	RESISTOR,CHIP 68K 1/16W (1608)
R1244	1-218-847-11	s	RESISTOR, CHIP 1K 1/16W (1608)
R1245	1-218-847-11	s	RESISTOR, CHIP 1K 1/16W (1608)
R1246	1-218-871-11	s	RESISTOR,CHIP 10K 1/16W (1608)
R1247	1-218-871-11	s	RESISTOR,CHIP 10K 1/16W (1608)
R1248	1-218-839-11	s	RESISTOR,CHIP 470 1/16W (1608)
R1249	1-211-985-11	s	RESISTOR,CHIP 47 1/16W (1608)
R1250	1-218-863-11	s	RESISTOR,CHIP 4.7K 1/16W(1608)

(VPR-71/71P BOARD (for DSR-1800/P))

Ref. No. or Q'ty	Part No.	SP	Description
R1251	1-216-864-11	s	RESISTOR,CHIP 0 1/16W (1608)
R1252	1-218-871-11	s	RESISTOR,CHIP 10K 1/16W (1608)
R1253	1-218-871-11	s	RESISTOR,CHIP 10K 1/16W (1608)
R1254	1-211-985-11	s	RESISTOR,CHIP 47 1/16W (1608)
R1255	1-218-863-11	s	RESISTOR,CHIP 4.7K 1/16W(1608)
R1256	1-218-863-11	s	RESISTOR,CHIP 4.7K 1/16W(1608)
R1257	1-216-864-11	s	RESISTOR,CHIP 0 1/16W (1608)
R1259	1-216-864-11	s	RESISTOR,CHIP 0 1/16W (1608)
R1260	1-216-801-11	s	RESISTOR,CHIP 22 1/16W (1608)
R1261	1-216-801-11	s	RESISTOR,CHIP 22 1/16W (1608)
R1262	1-216-801-11	s	RESISTOR,CHIP 22 1/16W (1608)
R1263	1-216-801-11	s	RESISTOR,CHIP 22 1/16W (1608)
R1264	1-216-864-11	s	RESISTOR,CHIP 0 1/16W (1608)
R1265	1-216-864-11	s	RESISTOR,CHIP 0 1/16W (1608)
R1266	1-216-864-11	s	RESISTOR,CHIP 0 1/16W (1608)
R1267	1-216-864-11	s	RESISTOR,CHIP 0 1/16W (1608)
R1268	1-218-871-11	s	RESISTOR,CHIP 10K 1/16W (1608) [for DSR-1800(UC), (J)]
R1269	1-218-871-11	s	RESISTOR,CHIP 10K 1/16W (1608) [for DSR-1800P]
R1271	1-218-871-11	s	RESISTOR,CHIP 10K 1/16W (1608)
R1273	1-216-864-11	s	RESISTOR,CHIP 0 1/16W (1608)
R1274	1-216-864-11	s	RESISTOR,CHIP 0 1/16W (1608)
R1275	1-216-864-11	s	RESISTOR,CHIP 0 1/16W (1608)
R1276	1-216-864-11	s	RESISTOR,CHIP 0 1/16W (1608)
R1277	1-216-864-11	s	RESISTOR,CHIP 0 1/16W (1608)
R1278	1-216-864-11	s	RESISTOR,CHIP 0 1/16W (1608)
R1279	1-216-801-11	s	RESISTOR,CHIP 22 1/16W (1608)
R1280	1-216-801-11	s	RESISTOR,CHIP 22 1/16W (1608)
R1281	1-218-895-11	s	RESISTOR,CHIP 100K 1/16W(1608)
R1282	1-218-895-11	s	RESISTOR,CHIP 100K 1/16W(1608)
R1283	1-218-895-11	s	RESISTOR,CHIP 100K 1/16W(1608)
R1284	1-218-895-11	s	RESISTOR,CHIP 100K 1/16W(1608)
R1285	1-216-864-11	s	RESISTOR,CHIP 0 1/16W (1608) [for DSR-1800(UC), (J)]
R1300	1-218-849-11	s	RESISTOR,CHIP 1.2K 1/16W(1608) [for DSR-1800(UC), (J)]
R1300	1-218-848-11	s	RESISTOR,CHIP 1.1K 1/16W(1608) [for DSR-1800P]
R1301	1-211-990-11	s	RESISTOR,CHIP 75 1/16W (1608)
R1302	1-211-990-11	s	RESISTOR,CHIP 75 1/16W (1608)
R1303	1-218-861-11	s	RESISTOR,CHIP 3.9K 1/16W(1608)
R1304	1-211-990-11	s	RESISTOR,CHIP 75 1/16W (1608)
R1305	1-218-873-11	s	RESISTOR,CHIP 12K 1/16W (1608)
R1306	1-218-839-11	s	RESISTOR,CHIP 470 1/16W (1608)
R1307	1-216-864-11	s	RESISTOR,CHIP 0 1/16W (1608) [for DSR-1800(UC), (J)]
R1307	1-218-823-11	s	RESISTOR,CHIP 100 1/16W (1608) [for DSR-1800P]
R1308	1-218-839-11	s	RESISTOR,CHIP 470 1/16W (1608)
R1310	1-218-839-11	s	RESISTOR,CHIP 470 1/16W (1608)
R1311	1-211-985-11	s	RESISTOR,CHIP 47 1/16W (1608)
R1312	1-211-985-11	s	RESISTOR,CHIP 47 1/16W (1608)
R1313	1-211-985-11	s	RESISTOR,CHIP 47 1/16W (1608)
RB300	1-239-412-11	s	NETWORK, RESISTOR 100 (1608)
RB301	1-239-412-11	s	NETWORK, RESISTOR 100 (1608)
RB302	1-239-412-11	s	NETWORK, RESISTOR 100 (1608)
RB303	1-239-412-11	s	NETWORK, RESISTOR 100 (1608)
RB304	1-239-412-11	s	NETWORK, RESISTOR 100 (1608)

(VPR-71/71P BOARD (for DSR-1800/P))

Ref. No. or Q'ty	Part No.	SP	Description
RB305	1-236-908-11	s	RESISTOR,NETWORK 10K (3216)
RB306	1-236-908-11	s	RESISTOR,NETWORK 10K (3216)
RB500	1-239-390-11	s	RESISTOR,NETWORK 33 (1608)
RB501	1-239-390-11	s	RESISTOR,NETWORK 33 (1608)
RB502	1-239-390-11	s	RESISTOR,NETWORK 33 (1608)
RB503	1-239-390-11	s	RESISTOR,NETWORK 33 (1608)
RB504	1-239-390-11	s	RESISTOR,NETWORK 33 (1608)
RB1200	1-239-711-11	s	NETWORK, RESISTOR 0 (1608)
RB1201	1-239-711-11	s	NETWORK, RESISTOR 0 (1608)
RB1202	1-239-711-11	s	NETWORK, RESISTOR 0 (1608)
RB1205	1-239-412-11	s	NETWORK, RESISTOR 100 (1608)
RV200	1-225-785-21	s	RES, ADJ, CERMET 100
RV202	1-225-787-21	s	RES, ADJ, CERMET 500
RV300	1-225-791-21	s	RES, ADJ, CERMET 5K
RV301	1-225-792-21	s	RES, ADJ, CERMET 10K
RV302	1-225-791-21	s	RES, ADJ, CERMET 5K
RV400	1-225-789-21	s	RES, ADJ, CERMET 2K
RV500	1-225-787-21	s	RES, ADJ, CERMET 500
RV501	1-225-787-21	s	RES, ADJ, CERMET 500
RV501 *1	DELETE		
RV502	1-225-787-21	s	RES, ADJ, CERMET 500
RV502 *1	DELETE		
RV503	1-225-788-21	s	RES, ADJ, CERMET 1K
RV504	1-225-789-21	s	RES, ADJ, CERMET 2K
RV505	1-225-789-21	s	RES, ADJ, CERMET 2K
RV506	1-225-789-21	s	RES, ADJ, CERMET 2K
RV507	1-225-789-21	s	RES, ADJ, CERMET 2K
RV508	1-225-789-21	s	RES, ADJ, CERMET 2K
RV509	1-225-789-21	s	RES, ADJ, CERMET 2K
RV600	1-225-792-21	s	RES, ADJ, CERMET 10K
RV700	1-225-791-21	s	RES, ADJ, CERMET 5K
RV701	1-225-791-21	s	RES, ADJ, CERMET 5K
RV702	1-225-789-21	s	RES, ADJ, CERMET 2K
RV702 *1	DELETE		
RV703	1-225-789-21	s	RES, ADJ, CERMET 2K
RV704	1-225-785-21	s	RES, ADJ, CERMET 100
RV705	1-225-789-21	s	RES, ADJ, CERMET 2K
RV706	1-225-785-21	s	RES, ADJ, CERMET 100
RV800	1-225-791-21	s	RES, ADJ, CERMET 5K
RV801	1-225-791-21	s	RES, ADJ, CERMET 5K
RV802	1-225-795-11	s	RESISTOR,ADJ CERMET 50K
RV803	1-225-795-11	s	RESISTOR,ADJ CERMET 50K
RV804	1-225-789-21	s	RES, ADJ, CERMET 2K
RV900	1-225-787-21	s	RES, ADJ, CERMET 500
RV901	1-225-785-21	s	RES, ADJ, CERMET 100
RV902	1-225-787-21	s	RES, ADJ, CERMET 500
RV903	1-225-788-21	s	RES, ADJ, CERMET 1K
RV903 *1	DELETE		
RV904	1-225-788-21	s	RES, ADJ, CERMET 1K
RV904 *1	DELETE		
RV905	1-225-787-21	s	RES, ADJ, CERMET 500
RV1000	1-225-791-21	s	RES, ADJ, CERMET 5K
RV1001	1-225-789-21	s	RES, ADJ, CERMET 2K
RV1002	1-225-788-21	s	RES, ADJ, CERMET 1K
RV1002*1	DELETE		
RV1100	1-225-792-21	s	RES, ADJ, CERMET 10K
RV1101	1-225-792-21	s	RES, ADJ, CERMET 10K
RV1200	1-225-792-21	s	RES, ADJ, CERMET 10K

(VPR-71/71P BOARD (for DSR-1800/P))

Ref. No. or Q'ty	Part No.	SP	Description
RV1201	1-225-792-21	s	RES, ADJ, CERMET 10K
THP110	1-809-352-11	s	THERMISTOR,NTC [for DSR-1800P]
THP800	1-809-352-11	s	THERMISTOR,NTC
X400	1-760-109-21	s	VIBRATOR, CRYSTAL [for DSR-1800(UC), (J)]
X400	1-760-183-21	s	VIBRATOR, CRYSTAL [for DSR-1800P]
X401	1-767-617-11	s	OSCILLATOR, CRYSTAL [for DSR-1800(UC), (J)]
X401	1-767-619-11	s	OSCILLATOR, CRYSTAL [for DSR-1800P]
X700	1-781-123-21	s	OSCILLATOR, CRYSTAL
X701	1-781-123-21	s	OSCILLATOR, CRYSTAL
X702	1-781-123-21	s	OSCILLATOR, CRYSTAL
X1200	1-767-617-11	s	OSCILLATOR, CRYSTAL [for DSR-1800(UC), (J)]
X1200	1-767-619-11	s	OSCILLATOR, CRYSTAL [for DSR-1800P]
X1201	1-767-695-21	s	OSCILLATOR, CRYSTAL

http://getMANUAL.com

DV-26 BOARD (DSBK-1803)
---

*1: Lot No.073 and higher
*2: Lot No.083 and higher

Ref. No. or Q'ty	Part No.	SP	Description
2pcs	7-621-772-18	s	SCREW +B 2X4
2pcs	7-621-771-06	s	SCREW +B 2X5
C101	1-107-826-11	s	CAP, CHIP CERAMIC 100000PF B
C102	1-126-393-11	s	CAP, CHIP ELECT 33MF
C103	1-107-826-11	s	CAP, CHIP CERAMIC 100000PF B
C104	1-110-569-11	s	CAP, CHIP TANTALUM ELECT 47MF
C105	1-107-826-11	s	CAP, CHIP CERAMIC 100000PF B
C106	1-131-661-21	s	CAP, CHIP ELECT 100MF
C201	1-107-826-11	s	CAP, CHIP CERAMIC 100000PF B
C202	1-104-608-11	s	CAP, CHIP ELECT 33MF
C203	1-107-826-11	s	CAP, CHIP CERAMIC 100000PF B
C204	1-107-826-11	s	CAP, CHIP CERAMIC 100000PF B
C205	1-107-826-11	s	CAP, CHIP CERAMIC 100000PF B
C206	1-107-826-11	s	CAP, CHIP CERAMIC 100000PF B
C207	1-107-826-11	s	CAP, CHIP CERAMIC 100000PF B
C208	1-107-826-11	s	CAP, CHIP CERAMIC 100000PF B
C209	1-107-826-11	s	CAP, CHIP CERAMIC 100000PF B
C210	1-107-826-11	s	CAP, CHIP CERAMIC 100000PF B
C216	1-107-826-11	s	CAP, CHIP CERAMIC 100000PF B
C217	1-163-023-11	s	CAP, CHIP CERAMIC 0.015MF
C217 *1	1-107-693-11	s	CAP, ELECT 10MF/50V
C217 *2	1-115-154-11	s	CAP, ELECT 10MF
C218	1-107-826-11	s	CAP, CHIP CERAMIC 100000PF B
C219	1-107-826-11	s	CAP, CHIP CERAMIC 100000PF B
C220	1-104-608-11	s	CAP, CHIP ELECT 33MF
C221	1-164-217-11	s	CAP,CERAMIC 150PF CH 1608
C222	1-107-826-11	s	CAP, CHIP CERAMIC 100000PF B
C223	1-107-826-11	s	CAP, CHIP CERAMIC 100000PF B
C224	1-107-826-11	s	CAP, CHIP CERAMIC 100000PF B
C225	1-107-826-11	s	CAP, CHIP CERAMIC 100000PF B
C226	1-164-217-11	s	CAP,CERAMIC 150PF CH 1608
C227	1-164-217-11	s	CAP,CERAMIC 150PF CH 1608
C228	1-164-217-11	s	CAP, CERAMIC 150PF CH 1608
C228 *1	1-107-826-11	s	CAP, CHIP CERAMIC 100000PF B
C229	1-162-919-11	s	CAP, CERAMIC 22PF CH 1608
C311	1-107-826-11	s	CAP, CHIP CERAMIC 100000PF B
C312	1-107-826-11	s	CAP, CHIP CERAMIC 100000PF B
C313	1-107-826-11	s	CAP, CHIP CERAMIC 100000PF B
C314	1-107-826-11	s	CAP, CHIP CERAMIC 100000PF B
C315	1-107-826-11	s	CAP, CHIP CERAMIC 100000PF B
C323	1-107-826-11	s	CAP, CHIP CERAMIC 100000PF B
C324	1-126-392-11	s	CAP, CHIP ELECT 100MF
C326	1-107-826-11	s	CAP, CHIP CERAMIC 100000PF B
C327	1-107-826-11	s	CAP, CHIP CERAMIC 100000PF B
C329	1-107-826-11	s	CAP, CHIP CERAMIC 100000PF B
C330	1-107-826-11	s	CAP, CHIP CERAMIC 100000PF B
C331	1-107-826-11	s	CAP, CHIP CERAMIC 100000PF B
C332	1-107-826-11	s	CAP, CHIP CERAMIC 100000PF B
C333	1-107-826-11	s	CAP, CHIP CERAMIC 100000PF B
C334	1-107-826-11	s	CAP, CHIP CERAMIC 100000PF B
C335	1-162-917-11	s	CAP, CERAMIC 15PF CH 1608
C336	1-162-917-11	s	CAP, CERAMIC 15PF CH 1608
C336 *1	1-162-919-11	s	CAP, CERAMIC 22PF CH 1608
C339	1-107-826-11	s	CAP, CHIP CERAMIC 100000PF B
C399 *2	DELETE		
C413	1-164-230-11	s	CAP,CERAMIC 220PF CH 1608
C414	1-164-230-11	s	CAP,CERAMIC 220PF CH 1608

(DV-26 BOARD (DSBK-1803))

Ref. No. or Q'ty	Part No.	SP	Description
C415	1-164-230-11	s	CAP,CERAMIC 220PF CH 1608
C416	1-164-230-11	s	CAP,CERAMIC 220PF CH 1608
C417	1-107-826-11	s	CAP, CHIP CERAMIC 100000PF B
C418	1-107-826-11	s	CAP, CHIP CERAMIC 100000PF B
C420	1-107-826-11	s	CAP, CHIP CERAMIC 100000PF B
C421	1-126-401-21	s	CAP, CHIP ELECT 1MF
C422	1-162-964-11	s	CAP, CERAMIC 1000PF/50V B
C422 *2	DELETE		
C501	1-107-826-11	s	CAP, CHIP CERAMIC 100000PF B
C502	1-104-752-11	s	CAP, CHIP TANTALUM ELECT 33MF
C502 *2	1-110-569-11	s	CAP, CHIP TANTALUM ELECT 47MF
C503	1-107-826-11	s	CAP, CHIP CERAMIC 100000PF B
C504	1-104-752-11	s	CAP, CHIP TANTALUM ELECT 33MF
C505	1-107-826-11	s	CAP, CHIP CERAMIC 100000PF B
C506	1-107-826-11	s	CAP, CHIP CERAMIC 100000PF B
C507	1-162-919-11	s	CAP, CERAMIC 22PF CH 1608
C508	1-162-919-11	s	CAP, CERAMIC 22PF CH 1608
C509	1-109-982-11	s	CAP, CHIP CERAMIC 1MF B (2012)
C510	1-164-230-11	s	CAP,CERAMIC 220PF CH 1608
C511	1-107-826-11	s	CAP, CHIP CERAMIC 100000PF B
C512	1-104-608-11	s	CAP, CHIP ELECT 33MF
C513	1-107-826-11	s	CAP, CHIP CERAMIC 100000PF B
C514	1-107-826-11	s	CAP, CHIP CERAMIC 100000PF B
C515	1-107-826-11	s	CAP, CHIP CERAMIC 100000PF B
C601	1-107-826-11	s	CAP, CHIP CERAMIC 100000PF B
C602	1-126-401-21	s	CAP, CHIP ELECT 1MF
C603	1-107-826-11	s	CAP, CHIP CERAMIC 100000PF B
C604	1-107-826-11	s	CAP, CHIP CERAMIC 100000PF B
C605	1-107-826-11	s	CAP, CHIP CERAMIC 100000PF B
C606	1-107-826-11	s	CAP, CHIP CERAMIC 100000PF B
C607	1-104-608-11	s	CAP, CHIP ELECT 33MF
C608	1-162-915-11	s	CAP, CERAMIC 10PF CH 1608
C609	1-162-915-11	s	CAP, CERAMIC 10PF CH 1608
C610	1-107-826-11	s	CAP, CHIP CERAMIC 100000PF B
C611	1-164-230-11	s	CAP,CERAMIC 220PF CH 1608
C613	1-107-826-11	s	CAP, CHIP CERAMIC 100000PF B
C614	1-107-826-11	s	CAP, CHIP CERAMIC 100000PF B
C615	1-135-212-21	s	CAP,CHIP TANTALUM ELECT 2.2MF
CN401	1-580-789-21	o	PIN, CONNECTOR (SMD) 6P
CN501	1-793-304-12	s	SQUARE-BUILT CONNECTOR(1394)
CN601	1-764-095-11	o	PIN, CONNECTOR (PC BOARD) 10P
D202	8-719-076-71	s	DIODE KV1471ETR
D203	8-719-076-71	s	DIODE KV1471ETR
D601	8-719-938-72	s	DIODE SB01-05CP-TB
D602	8-719-024-81	s	DIODE 1SS300-TE85L
D603	8-719-938-72	s	DIODE SB01-05CP-TB
D604	8-719-938-72	s	DIODE SB01-05CP-TB
IC101	8-729-039-85	s	TRANSISTOR UPC29L05T
IC102	8-759-657-92	s	IC TA48M03F(TE16L)
IC201	8-759-327-04	s	IC CXD2913Q
IC202	8-759-679-78	s	IC CXD9127R
IC203	8-759-327-01	s	IC NJM062V(TE2)
IC204	8-759-196-96	s	IC TC7SH08FU-TE85R
IC304	8-759-695-11	s	IC XCS10XL-4TQ144C
IC305	8-759-271-88	s	IC TC7SHU04FU-TE85R
IC307	8-759-058-64	s	IC TC7S32FU(TE85R)
IC308	8-759-058-64	s	IC TC7S32FU(TE85R)

(DV-26 BOARD (DSBK-1803))

Ref. No. or Q'ty	Part No.	SP	Description	
IC309	8-759-058-64	s	IC TC7S32FU(TE85R)	
IC309 *2	DELETE			
IC501	8-759-432-00	s	IC TSB11LV01PT-TEB	
IC502	8-759-430-56	s	IC CXD2194AR	
IC601	8-759-445-93	s	IC AK6440AM-E2	
IC602	8-759-586-82	s	IC HD64F3048VTF8	
IC603	8-759-524-32	s	IC TC74VHC367FT(EL)	
IC604	8-759-524-24	o	IC TC7WT241FU(TE12R)	
IC607	8-759-594-71	s	IC TC7SH14FU-TE85R	
IC608	8-759-594-71	s	IC TC7SH14FU-TE85R	
IC609	8-759-387-54	s	IC S-80727-SN-DQ-T1	
IC610	8-759-566-06	s	IC TC7WH08FU(TE12R)	
L202	1-412-179-11	s	MICRO INDUCTOR 3.3UH	
L203	1-412-056-11	s	INDUCTOR (SMD) 4.7UH	
L204	1-414-398-11	s	INDUCTOR (SMD) 10UH	
L302	1-414-398-11	s	INDUCTOR (SMD) 10UH	
L303	1-414-398-11	s	INDUCTOR (SMD) 10UH	
L502	1-414-398-11	s	INDUCTOR (SMD) 10UH	
L503	1-412-939-11	s	INDUCTOR 1.0UH	(2518)
L504	1-414-398-11	s	INDUCTOR (SMD) 10UH	
L505	1-469-294-21	s	COIL, 1394 COMMON MODE	
L601	1-412-939-11	s	INDUCTOR 1.0UH	(2518)
Q402	8-729-029-14	s	TRANSISTOR DTC144EUA-T106	
Q403	8-729-029-14	s	TRANSISTOR DTC144EUA-T106	
R201	1-216-801-11	s	RES, CHIP 22	(1608)
R203	1-216-845-11	s	RES, CHIP 100K	(1608)
R204	1-216-841-11	s	RES, CHIP 47K	(1608)
R205	1-216-838-11	s	RES, CHIP 27K	(1608)
R206	1-216-839-11	s	RES, CHIP 33K	(1608)
R207	1-216-841-11	s	RES, CHIP 47K	(1608)
R208	1-216-829-11	s	RES, CHIP 4.7K	(1608)
R209	1-216-841-11	s	RES, CHIP 47K	(1608)
R211	1-218-875-11	s	RES, CHIP 15K	(1608)
R212	1-216-841-11	s	RES, CHIP 47K	(1608)
R213	1-216-801-11	s	RES, CHIP 22	(1608)
R214	1-216-805-11	s	RES, CHIP 47	(1608)
R216 *2	1-216-864-11	s	CONDUCTOR, CHIP	(1608)
R303	1-216-864-11	s	CONDUCTOR, CHIP	(1608)
R304	1-216-864-11	s	CONDUCTOR, CHIP	(1608)
R305	1-216-833-11	s	RES, CHIP 10K	(1608)
R306	1-216-797-11	s	RES, CHIP 10	(1608)
R307	1-216-833-11	s	RES, CHIP 10K	(1608)
R308	1-216-829-11	s	RES, CHIP 4.7K	(1608)
R309	1-216-829-11	s	RES, CHIP 4.7K	(1608)
R310	1-216-857-11	s	RES, CHIP 1.0M	(1608)
R311	1-216-841-11	s	RES, CHIP 47K	(1608)
R414	1-216-833-11	s	RES, CHIP 10K	(1608)
R415	1-216-845-11	s	RES, CHIP 100K	(1608)
R416	1-216-833-11	s	RES, CHIP 10K	(1608)
R417	1-216-833-11	s	RES, CHIP 10K	(1608)
R421	1-216-809-11	s	RES, CHIP 100	(1608)
R422	1-216-833-11	s	RES, CHIP 10K	(1608)
R423	1-216-829-11	s	RES, CHIP 4.7K	(1608)
R424	1-216-833-11	s	RES, CHIP 10K	(1608)
R425	1-216-864-11	s	CONDUCTOR, CHIP	(1608)
R426	1-216-829-11	s	RES, CHIP 4.7K	(1608)
R427	1-216-841-11	s	RES, CHIP 47K	(1608)
R428	1-216-841-11	s	RES, CHIP 47K	

(DV-26 BOARD (DSBK-1803))

Ref. No. or Q'ty	Part No.	SP	Description	
R428 *2	DELETE			
R429	1-216-841-11	s	RES, CHIP 47K	
R429 *2	DELETE			
R501	1-216-833-11	s	RES, CHIP 10K	(1608)
R502	1-216-833-11	s	RES, CHIP 10K	(1608)
R503	1-216-833-11	s	RES, CHIP 10K	(1608)
R504	1-218-873-11	s	RES, CHIP 12K	(1608)
R505	1-216-857-11	s	RES, CHIP 1.0M	(1608)
R506	1-218-873-11	s	RES, CHIP 12K	(1608)
R507	1-216-833-11	s	RES, CHIP 10K	(1608)
R508	1-216-833-11	s	RES, CHIP 10K	(1608)
R509	1-211-987-11	s	RES, CHIP 56	(1608)
R510	1-211-987-11	s	RES, CHIP 56	(1608)
R511	1-211-987-11	s	RES, CHIP 56	(1608)
R512	1-211-987-11	s	RES, CHIP 56	(1608)
R513	1-216-821-11	s	RES, CHIP 1.0K	(1608)
R514	1-216-845-11	s	RES, CHIP 100K	(1608)
R515	1-216-833-11	s	RES, CHIP 10K	(1608)
R516	1-216-833-11	s	RES, CHIP 10K	(1608)
R517	1-216-845-11	s	RES, CHIP 100K	(1608)
R518	1-216-845-11	s	RES, CHIP 100K	(1608)
R601	1-216-864-11	s	CONDUCTOR, CHIP	(1608)
R603	1-216-834-11	s	RES, CHIP 12K	(1608)
R604	1-216-809-11	s	RES, CHIP 100	(1608)
R605	1-216-809-11	s	RES, CHIP 100	(1608)
R606	1-216-841-11	s	RES, CHIP 47K	(1608)
R607	1-216-841-11	s	RES, CHIP 47K	(1608)
R608	1-216-841-11	s	RES, CHIP 47K	(1608)
R609	1-216-841-11	s	RES, CHIP 47K	(1608)
R610	1-216-841-11	s	RES, CHIP 47K	(1608)
R611	1-216-841-11	s	RES, CHIP 47K	(1608)
R612	1-216-841-11	s	RES, CHIP 47K	(1608)
R613	1-218-840-11	s	RES, CHIP 510	(1608)
R614	1-216-834-11	s	RES, CHIP 12K	(1608)
R615	1-216-841-11	s	RES, CHIP 47K	(1608)
R616	1-216-841-11	s	RES, CHIP 47K	(1608)
R617	1-216-809-11	s	RES, CHIP 100	(1608)
R618	1-216-841-11	s	RES, CHIP 47K	(1608)
R619	1-216-841-11	s	RES, CHIP 47K	(1608)
R620	1-216-809-11	s	RES, CHIP 100	(1608)
R621	1-216-845-11	s	RES, CHIP 100K	(1608)
RB201	1-239-621-11	s	NETWORK RESISTOR (CHIP) 22	
RB301	1-239-621-11	s	NETWORK RESISTOR (CHIP) 22	
RB302	1-239-621-11	s	NETWORK RESISTOR (CHIP) 22	
RB303	1-239-621-11	s	NETWORK RESISTOR (CHIP) 22	
RB304	1-239-621-11	s	NETWORK RESISTOR (CHIP) 22	
RB305	1-239-711-91	s	NETWORK RESISTOR (CHIP) 0	
RB306	1-239-711-91	s	NETWORK RESISTOR (CHIP) 0	
RB307	1-239-711-91	s	NETWORK RESISTOR (CHIP) 0	
RB308	1-239-711-91	s	NETWORK RESISTOR (CHIP) 0	
RB601	1-239-389-11	s	NWTWORK RESISTOR (CHIP) 47K	
RB602	1-239-308-11	s	RESISTOR ARRAY, CHIP 47K	
X1	1-767-449-11	s	VIBRATOR, CRYSTAL	
X501	1-579-922-11	s	VIBRATOR, CRYSTAL (CHIP TYPE)	
X601	1-767-636-11	s	VIBRATOR, CRYSTAL	

SDI-61 BOARD (DSBK-1802)

Ref. No. or Q'ty	Part No.	SP	Description
1pc	7-685-646-79	s	SCREW +BVTP 3X8(EP-FE/ZNBK/CM2
C101	1-107-826-11	s	CAPACITOR,CHIP CERAMIC 0.1MF
C102	1-126-393-11	s	CAPACITOR ELECT 33MF/10V(CHIP)
C103	1-104-608-11	s	CAPACITOR, ELECT 33MF/6.3V
C104	1-104-608-11	s	CAPACITOR, ELECT 33MF/6.3V
C105	1-107-826-11	s	CAPACITOR,CHIP CERAMIC 0.1MF
C106	1-107-826-11	s	CAPACITOR,CHIP CERAMIC 0.1MF
C107	1-107-826-11	s	CAPACITOR,CHIP CERAMIC 0.1MF
C108	1-107-826-11	s	CAPACITOR,CHIP CERAMIC 0.1MF
C109	1-107-826-11	s	CAPACITOR,CHIP CERAMIC 0.1MF
C110	1-107-826-11	s	CAPACITOR,CHIP CERAMIC 0.1MF
C111	1-107-826-11	s	CAPACITOR,CHIP CERAMIC 0.1MF
C112	1-107-826-11	s	CAPACITOR,CHIP CERAMIC 0.1MF
C113	1-107-826-11	s	CAPACITOR,CHIP CERAMIC 0.1MF
C114	1-163-023-00	s	CAPACITOR,CHIP CERAMIC 0.015MF
C115	1-107-826-11	s	CAPACITOR,CHIP CERAMIC 0.1MF
C116	1-107-826-11	s	CAPACITOR,CHIP CERAMIC 0.1MF
C117	1-104-851-11	s	CAPACITOR,TANTALUM 10MF/10V
C118	1-164-217-11	s	CAPACITOR,CERAMIC 150PF/50V CH
C119	1-107-826-11	s	CAPACITOR,CHIP CERAMIC 0.1MF
C120	1-107-826-11	s	CAPACITOR,CHIP CERAMIC 0.1MF
C121	1-164-217-11	s	CAPACITOR,CERAMIC 150PF/50V CH
C122	1-164-217-11	s	CAPACITOR,CERAMIC 150PF/50V CH
C123	1-164-217-11	s	CAPACITOR,CERAMIC 150PF/50V CH
C125	1-107-826-11	s	CAPACITOR,CHIP CERAMIC 0.1MF
C126	1-115-467-11	s	CAPACITOR CERAMIC 0.22MF/10V B
C127	1-164-217-11	s	CAPACITOR,CERAMIC 150PF/50V CH
C201	1-104-851-11	s	CAPACITOR,TANTALUM 10MF/10V
C202	1-107-826-11	s	CAPACITOR,CHIP CERAMIC 0.1MF
C203	1-109-982-11	s	CAPACITOR,CHIP CERAMIC 1MF/10V
C204	1-107-826-11	s	CAPACITOR,CHIP CERAMIC 0.1MF
C205	1-104-851-11	s	CAPACITOR,TANTALUM 10MF/10V
C206	1-107-826-11	s	CAPACITOR,CHIP CERAMIC 0.1MF
C207	1-107-826-11	s	CAPACITOR,CHIP CERAMIC 0.1MF
C208	1-162-923-11	s	CAPACITOR,CERAMIC 47PF/50V CH
C209	1-107-826-11	s	CAPACITOR,CHIP CERAMIC 0.1MF
C210	1-162-915-11	s	CAPACITOR,CERAMIC 10PF/50V CH
C211	1-109-982-11	s	CAPACITOR,CHIP CERAMIC 1MF/10V
C212	1-107-826-11	s	CAPACITOR,CHIP CERAMIC 0.1MF
C213	1-104-851-11	s	CAPACITOR,TANTALUM 10MF/10V
C216	1-107-826-11	s	CAPACITOR,CHIP CERAMIC 0.1MF
C217	1-107-826-11	s	CAPACITOR,CHIP CERAMIC 0.1MF
C218	1-104-851-11	s	CAPACITOR,TANTALUM 10MF/10V
C219	1-107-826-11	s	CAPACITOR,CHIP CERAMIC 0.1MF
C220	1-107-826-11	s	CAPACITOR,CHIP CERAMIC 0.1MF
C221	1-107-826-11	s	CAPACITOR,CHIP CERAMIC 0.1MF
C223	1-104-851-11	s	CAPACITOR,TANTALUM 10MF/10V
C225	1-104-851-11	s	CAPACITOR,TANTALUM 10MF/10V
C226	1-107-826-11	s	CAPACITOR,CHIP CERAMIC 0.1MF
C227	1-107-826-11	s	CAPACITOR,CHIP CERAMIC 0.1MF
C228	1-107-826-11	s	CAPACITOR,CHIP CERAMIC 0.1MF
C229	1-107-826-11	s	CAPACITOR,CHIP CERAMIC 0.1MF
C230	1-107-826-11	s	CAPACITOR,CHIP CERAMIC 0.1MF
C231	1-107-826-11	s	CAPACITOR,CHIP CERAMIC 0.1MF
C232	1-107-826-11	s	CAPACITOR,CHIP CERAMIC 0.1MF
C233	1-107-826-11	s	CAPACITOR,CHIP CERAMIC 0.1MF
C234	1-107-826-11	s	CAPACITOR,CHIP CERAMIC 0.1MF
C235	1-107-826-11	s	CAPACITOR,CHIP CERAMIC 0.1MF

(SDI-61 BOARD (DSBK-1802))

Ref. No. or Q'ty	Part No.	SP	Description
C236	1-107-826-11	s	CAPACITOR,CHIP CERAMIC 0.1MF
C301	1-107-826-11	s	CAPACITOR,CHIP CERAMIC 0.1MF
C302	1-107-826-11	s	CAPACITOR,CHIP CERAMIC 0.1MF
C303	1-107-826-11	s	CAPACITOR,CHIP CERAMIC 0.1MF
C304	1-107-826-11	s	CAPACITOR,CHIP CERAMIC 0.1MF
C305	1-107-826-11	s	CAPACITOR,CHIP CERAMIC 0.1MF
C307	1-104-851-11	s	CAPACITOR,TANTALUM 10MF/10V
C308	1-104-851-11	s	CAPACITOR,TANTALUM 10MF/10V
C309	1-107-826-11	s	CAPACITOR,CHIP CERAMIC 0.1MF
C310	1-107-826-11	s	CAPACITOR,CHIP CERAMIC 0.1MF
C312	1-107-826-11	s	CAPACITOR,CHIP CERAMIC 0.1MF
C313	1-107-826-11	s	CAPACITOR,CHIP CERAMIC 0.1MF
C315	1-107-826-11	s	CAPACITOR,CHIP CERAMIC 0.1MF
C316	1-107-826-11	s	CAPACITOR,CHIP CERAMIC 0.1MF
C317	1-107-826-11	s	CAPACITOR,CHIP CERAMIC 0.1MF
C319	1-104-851-11	s	CAPACITOR,TANTALUM 10MF/10V
C320	1-107-826-11	s	CAPACITOR,CHIP CERAMIC 0.1MF
C321	1-107-826-11	s	CAPACITOR,CHIP CERAMIC 0.1MF
C322	1-107-826-11	s	CAPACITOR,CHIP CERAMIC 0.1MF
C323	1-162-915-11	s	CAPACITOR,CERAMIC 10PF/50V CH
C324	1-107-826-11	s	CAPACITOR,CHIP CERAMIC 0.1MF
C325	1-107-826-11	s	CAPACITOR,CHIP CERAMIC 0.1MF
C326	1-107-826-11	s	CAPACITOR,CHIP CERAMIC 0.1MF
C327	1-104-851-11	s	CAPACITOR,TANTALUM 10MF/10V
C328	1-107-826-11	s	CAPACITOR,CHIP CERAMIC 0.1MF
C329	1-107-826-11	s	CAPACITOR,CHIP CERAMIC 0.1MF
C330	1-107-826-11	s	CAPACITOR,CHIP CERAMIC 0.1MF
C331	1-162-911-11	s	CAPACITOR,CERAMIC 6PF/50V 1608
C332	1-107-826-11	s	CAPACITOR,CHIP CERAMIC 0.1MF
C333	1-107-826-11	s	CAPACITOR,CHIP CERAMIC 0.1MF
C334	1-107-826-11	s	CAPACITOR,CHIP CERAMIC 0.1MF
C335	1-107-826-11	s	CAPACITOR,CHIP CERAMIC 0.1MF
C336	1-162-907-11	s	CAPACITOR,CERAMIC 2PF/50V(CK)
C337	1-126-393-11	s	CAPACITOR ELECT 33MF/10V(CHIP)
C401	1-107-826-11	s	CAPACITOR,CHIP CERAMIC 0.1MF
C402	1-162-915-11	s	CAPACITOR,CERAMIC 10PF/50V CH
C403	1-162-915-11	s	CAPACITOR,CERAMIC 10PF/50V CH
C404	1-104-851-11	s	CAPACITOR,TANTALUM 10MF/10V
C405	1-107-826-11	s	CAPACITOR,CHIP CERAMIC 0.1MF
C406	1-107-826-11	s	CAPACITOR,CHIP CERAMIC 0.1MF
C407	1-107-826-11	s	CAPACITOR,CHIP CERAMIC 0.1MF
C408	1-107-826-11	s	CAPACITOR,CHIP CERAMIC 0.1MF
C409	1-107-826-11	s	CAPACITOR,CHIP CERAMIC 0.1MF
CN201	1-794-815-11	s	CONNECTOR, COAXIAL (BNC TYPE)
D101	8-719-024-81	s	DIODE 1SS300-TE85L
D102	8-719-076-71	s	DIODE KV1471ETR
D103	8-719-076-71	s	DIODE KV1471ETR
D201	8-719-071-10	s	DIODE CL-191HR-CD-T
D202	8-719-064-52	s	DIODE CL-191YG-CD-T
D301	8-719-071-10	s	DIODE CL-191HR-CD-T
D401	8-719-024-81	s	DIODE 1SS300-TE85L
FB201	1-543-644-11	s	BEAD, FERRITE (CHIP)
FB202	1-543-644-11	s	BEAD, FERRITE (CHIP)
FB203	1-543-644-11	s	BEAD, FERRITE (CHIP)
FB301	1-543-644-11	s	BEAD, FERRITE (CHIP)
FB302	1-543-644-11	s	BEAD, FERRITE (CHIP)
FB303	1-543-644-11	s	BEAD, FERRITE (CHIP)

(SDI-61 BOARD (DSBK-1802))

Ref. No. or Q'ty	Part No.	SP	Description
FB304	1-543-644-11	s	BEAD, FERRITE (CHIP)
IC101	8-759-259-77	s	IC PQ20VZ5U
IC102	8-729-039-85	s	IC UPC29L05T
IC103	8-759-327-04	s	IC CXD2913Q
IC104	8-759-679-78	s	IC CXD9127R
IC105	8-759-327-01	s	IC NJM062V-TE2
IC106	8-759-523-97	s	IC TC74VHC123AFT(EL)
IC107	8-759-196-96	s	IC TC7SH08FU (TE85R)
IC201	8-752-078-34	s	IC CXB1342R
IC202	8-759-369-93	s	IC CXD8969AR
IC203	8-759-524-50	s	IC TC74VHC541FT(EL)
IC204	8-759-524-32	s	IC TC74VHC367FT(EL)
IC205	8-759-447-77	s	IC TC7WH74FU (TR12R)
IC301	8-759-369-93	s	IC CXD8969AR
IC302	8-752-078-32	s	IC CXB1341R
IC303	8-759-531-92	s	IC TC7WH04FU(TE12R)
IC401	8-759-524-24	o	IC TC7WT241FU(TE12R)
IC403	8-759-524-51	s	IC TC74VHC573FT (EL)
IC404	8-759-524-07	s	IC TC74VHC138FT(EL)
IC405	8-759-524-28	s	IC TC74VHC245FT(EL)
IC406	8-759-196-96	s	IC TC7SH08FU (TE85R)
L101	1-424-643-11	s	COIL, CHOKE 10UH
L102	1-412-179-11	s	MICRO INDUCTOR 3.3UH
L103	1-412-056-11	s	INDUCTOR 4.7UH (3225)
L201	1-410-797-11	s	CHIP INDUCTOR 0.015UH (3225)
L202	1-412-939-11	s	INDUCTOR 1.0UH (2520)
L203	1-412-939-11	s	INDUCTOR 1.0UH (2520)
L301	1-412-939-11	s	INDUCTOR 1.0UH (2520)
L401	1-410-377-31	s	INDUCTOR,CHIP 4.7UH (3225)
Q201	8-729-029-14	s	TRANSISTOR DTC144EUA-T106
Q202	8-729-028-91	s	TRANSISTOR DTA144EUA-T106
Q203	8-729-029-14	s	TRANSISTOR DTC144EUA-T106
Q301	8-729-028-91	s	TRANSISTOR DTA144EUA-T106
Q302	8-729-028-91	s	TRANSISTOR DTA144EUA-T106
Q303	8-729-029-14	s	TRANSISTOR DTC144EUA-T106
Q304	8-729-105-68	s	TRANSISTOR 2SC3356-K
Q305	8-729-105-68	s	TRANSISTOR 2SC3356-K
Q306	8-729-105-68	s	TRANSISTOR 2SC3356-K
Q401	8-729-029-14	s	TRANSISTOR DTC144EUA-T106
R101	1-218-851-11	s	RESISTOR,CHIP 1.5K 1/16W(1608)
R102	1-218-846-11	s	RESISTOR,CHIP 910 1/16W (1608)
R103	1-216-801-11	s	RESISTOR,CHIP 22 1/16W (1608)
R104	1-216-801-11	s	RESISTOR,CHIP 22 1/16W (1608)
R105	1-218-873-11	s	RESISTOR,CHIP 12K 1/16W (1608)
R106	1-216-841-11	s	RESISTOR, CHIP 47K 1/16W 1608
R107	1-216-845-11	s	RESISTOR,CHIP 100K 1/16W(1608)
R108	1-216-838-11	s	RESISTOR CHIP 27K 1/16W(1608)
R109	1-216-839-11	s	RESISTOR,CHIP 33K 1/16W 1608
R110	1-216-841-11	s	RESISTOR, CHIP 47K 1/16W 1608
R111	1-216-829-11	s	RESISTOR,CHIP 4.7K 1/16W(1608)
R112	1-216-841-11	s	RESISTOR, CHIP 47K 1/16W 1608
R114	1-218-875-11	s	RESISTOR,CHIP 15K 1/16W (1608)
R115	1-216-841-11	s	RESISTOR, CHIP 47K 1/16W 1608
R116	1-218-903-11	s	RESISTOR,CHIP 220K 1/16W(1608)
R117	1-216-833-11	s	RESISTOR,CHIP 10K 1/16W (1608)
R201	1-218-839-11	s	RESISTOR,CHIP 470 1/16W (1608)
R202	1-218-839-11	s	RESISTOR,CHIP 470 1/16W (1608)
R203	1-216-821-11	s	RESISTOR,CHIP 1.0K 1/16W(1608)

(SDI-61 BOARD (DSBK-1802))

Ref. No. or Q'ty	Part No.	SP	Description
R204	1-211-990-11	s	RESISTOR,CHIP 75 1/16W (1608)
R205	1-218-873-11	s	RESISTOR,CHIP 12K 1/16W (1608)
R206	1-216-821-11	s	RESISTOR,CHIP 1.0K 1/16W(1608)
R207	1-216-857-11	s	RESISTOR,CHIP 1M 1/16W(1608)
R208	1-211-990-11	s	RESISTOR,CHIP 75 1/16W (1608)
R209	1-211-990-11	s	RESISTOR,CHIP 75 1/16W (1608)
R210	1-216-815-11	s	RESISTOR,CHIP 330 1/16W 1608
R211	1-218-855-11	s	RESISTOR,CHIP 2.2K 1/16W(1608)
R212	1-216-809-11	s	RESISTOR,CHIP 100 1/16W 1608
R213	1-218-855-11	s	RESISTOR,CHIP 2.2K 1/16W(1608)
R214	1-216-821-11	s	RESISTOR,CHIP 1.0K 1/16W(1608)
R215	1-218-855-11	s	RESISTOR,CHIP 2.2K 1/16W(1608)
R216	1-216-815-11	s	RESISTOR,CHIP 330 1/16W 1608
R217	1-216-815-11	s	RESISTOR,CHIP 330 1/16W 1608
R218	1-216-809-11	s	RESISTOR,CHIP 100 1/16W 1608
R219	1-216-809-11	s	RESISTOR,CHIP 100 1/16W 1608
R220	1-216-809-11	s	RESISTOR,CHIP 100 1/16W 1608
R221	1-216-845-11	s	RESISTOR,CHIP 100K 1/16W(1608)
R222	1-216-845-11	s	RESISTOR,CHIP 100K 1/16W(1608)
R223	1-216-845-11	s	RESISTOR,CHIP 100K 1/16W(1608)
R224	1-216-845-11	s	RESISTOR,CHIP 100K 1/16W(1608)
R301	1-216-864-11	s	RESISTOR,CHIP 0 1/16W (1608)
R302	1-216-864-11	s	RESISTOR,CHIP 0 1/16W (1608)
R303	1-216-864-11	s	RESISTOR,CHIP 0 1/16W (1608)
R305	1-216-801-11	s	RESISTOR,CHIP 22 1/16W (1608)
R306	1-218-875-11	s	RESISTOR,CHIP 15K 1/16W (1608)
R307	1-218-875-11	s	RESISTOR,CHIP 15K 1/16W (1608)
R308	1-216-864-11	s	RESISTOR,CHIP 0 1/16W (1608)
R309	1-211-985-11	s	RESISTOR,CHIP 47 1/16W (1608)
R310	1-218-855-11	s	RESISTOR,CHIP 2.2K 1/16W(1608)
R311	1-218-847-11	s	RESISTOR, CHIP 1K 1/16W (1608)
R312	1-218-847-11	s	RESISTOR, CHIP 1K 1/16W (1608)
R313	1-218-845-11	s	RESISTOR,CHIP 820 1/16W (1608)
R315	1-218-873-11	s	RESISTOR,CHIP 12K 1/16W (1608)
R317	1-218-855-11	s	RESISTOR,CHIP 2.2K 1/16W(1608)
R318	1-218-847-11	s	RESISTOR, CHIP 1K 1/16W (1608)
R319	1-218-855-11	s	RESISTOR,CHIP 2.2K 1/16W(1608)
R320	1-216-815-11	s	RESISTOR,CHIP 330 1/16W 1608
R321	1-216-829-11	s	RESISTOR,CHIP 4.7K 1/16W(1608)
R322	1-218-839-11	s	RESISTOR,CHIP 470 1/16W (1608)
R326	1-218-833-11	s	RESISTOR,CHIP 270 1/16W (1608)
R327	1-218-833-11	s	RESISTOR,CHIP 270 1/16W (1608)
R328	1-211-985-11	s	RESISTOR,CHIP 47 1/16W (1608)
R329	1-211-989-11	s	RESISTOR,CHIP 68 1/16W (1608)
R330	1-211-978-11	s	RESISTOR,CHIP 24 1/16W (1608)
R331	1-211-984-11	s	RESISTOR,CHIP 43 1/16W (1608)
R332	1-218-829-11	s	RESISTOR,CHIP 180 1/16W (1608)
R333	1-211-989-11	s	RESISTOR,CHIP 68 1/16W (1608)
R334	1-211-978-11	s	RESISTOR,CHIP 24 1/16W (1608)
R335	1-218-839-11	s	RESISTOR,CHIP 470 1/16W (1608)
R336	1-211-985-11	s	RESISTOR,CHIP 47 1/16W (1608)
R337	1-211-985-11	s	RESISTOR,CHIP 47 1/16W (1608)
R338	1-218-827-11	s	RESISTOR,CHIP 150 1/16W (1608)
R339	1-218-847-11	s	RESISTOR, CHIP 1K 1/16W (1608)
R340	1-211-989-11	s	RESISTOR,CHIP 68 1/16W (1608)
R341	1-218-839-11	s	RESISTOR,CHIP 470 1/16W (1608)
R403	1-216-845-11	s	RESISTOR,CHIP 100K 1/16W(1608)
R404	1-216-845-11	s	RESISTOR,CHIP 100K 1/16W(1608)
R405	1-216-833-11	s	RESISTOR,CHIP 10K 1/16W (1608)

(SDI-61 BOARD (DSBK-1802))

Ref. No. or Q'ty	Part No.	SP	Description
R407	1-216-833-11	s	RESISTOR,CHIP 10K 1/16W (1608)
R408	1-216-864-11	s	RESISTOR,CHIP 0 1/16W (1608)
R409	1-216-821-11	s	RESISTOR,CHIP 1.0K 1/16W(1608)
R410	1-216-864-11	s	RESISTOR,CHIP 0 1/16W (1608)
R411	1-216-864-11	s	RESISTOR,CHIP 0 1/16W (1608)
R414	1-216-833-11	s	RESISTOR,CHIP 10K 1/16W (1608)
R415	1-216-833-11	s	RESISTOR,CHIP 10K 1/16W (1608)
RB101	1-239-621-11	s	NETWORK RESISTOR 22 (1608)
RB201	1-239-412-11	s	NETWORK, RESISTOR 100 (1608)
RB202	1-239-412-11	s	NETWORK, RESISTOR 100 (1608)
RB203	1-239-412-11	s	NETWORK, RESISTOR 100 (1608)
RB204	1-239-621-11	s	NETWORK RESISTOR 22 (1608)
RB205	1-239-621-11	s	NETWORK RESISTOR 22 (1608)
RB206	1-239-621-11	s	NETWORK RESISTOR 22 (1608)
RB207	1-239-309-11	s	RESISTOR ARRAY,CHIP 100K
RB301	1-239-621-11	s	NETWORK RESISTOR 22 (1608)
RB302	1-239-621-11	s	NETWORK RESISTOR 22 (1608)
RB303	1-239-412-11	s	NETWORK, RESISTOR 100 (1608)
RB304	1-239-412-11	s	NETWORK, RESISTOR 100 (1608)
RB305	1-239-412-11	s	NETWORK, RESISTOR 100 (1608)
RB401	1-239-389-11	s	RESISTOR,NETWORK 47K (1608)
RB402	1-239-389-11	s	RESISTOR,NETWORK 47K (1608)
RB403	1-236-904-11	s	RESISTOR NETWORK 1K (1608)
RB404	1-239-412-11	s	NETWORK, RESISTOR 100 (1608)
RV201	1-225-789-21	s	RES, ADJ, CERMET 2K
RV301	1-225-789-21	s	RES, ADJ, CERMET 2K
X401	1-579-988-11	s	VIBRATOR, CERAMIC

SDI-61A BOARD (DSBK-1602)

Ref. No. or Q'ty	Part No.	SP	Description
1pc	7-685-646-79	s	SCREW +BVTP 3X8(EP-FE/ZNBK/CM2
C101	1-107-826-11	s	CAPACITOR,CHIP CERAMIC 0.1MF
C102	1-126-393-11	s	CAPACITOR ELECT 33MF/10V(CHIP)
C103	1-104-608-11	s	CAPACITOR, ELECT 33MF/6.3V
C104	1-104-608-11	s	CAPACITOR, ELECT 33MF/6.3V
C105	1-107-826-11	s	CAPACITOR,CHIP CERAMIC 0.1MF
C106	1-107-826-11	s	CAPACITOR,CHIP CERAMIC 0.1MF
C301	1-107-826-11	s	CAPACITOR,CHIP CERAMIC 0.1MF
C302	1-107-826-11	s	CAPACITOR,CHIP CERAMIC 0.1MF
C303	1-107-826-11	s	CAPACITOR,CHIP CERAMIC 0.1MF
C304	1-107-826-11	s	CAPACITOR,CHIP CERAMIC 0.1MF
C305	1-107-826-11	s	CAPACITOR,CHIP CERAMIC 0.1MF
C307	1-104-851-11	s	CAPACITOR,TANTALUM 10MF/10V
C308	1-104-851-11	s	CAPACITOR,TANTALUM 10MF/10V
C309	1-107-826-11	s	CAPACITOR,CHIP CERAMIC 0.1MF
C310	1-107-826-11	s	CAPACITOR,CHIP CERAMIC 0.1MF
C312	1-107-826-11	s	CAPACITOR,CHIP CERAMIC 0.1MF
C313	1-107-826-11	s	CAPACITOR,CHIP CERAMIC 0.1MF
C315	1-107-826-11	s	CAPACITOR,CHIP CERAMIC 0.1MF
C316	1-107-826-11	s	CAPACITOR,CHIP CERAMIC 0.1MF
C317	1-107-826-11	s	CAPACITOR,CHIP CERAMIC 0.1MF
C319	1-104-851-11	s	CAPACITOR,TANTALUM 10MF/10V
C320	1-107-826-11	s	CAPACITOR,CHIP CERAMIC 0.1MF
C321	1-107-826-11	s	CAPACITOR,CHIP CERAMIC 0.1MF
C322	1-107-826-11	s	CAPACITOR,CHIP CERAMIC 0.1MF
C323	1-162-915-11	s	CAPACITOR,CERAMIC 10PF/50V CH
C324	1-107-826-11	s	CAPACITOR,CHIP CERAMIC 0.1MF
C325	1-107-826-11	s	CAPACITOR,CHIP CERAMIC 0.1MF
C326	1-107-826-11	s	CAPACITOR,CHIP CERAMIC 0.1MF
C327	1-104-851-11	s	CAPACITOR,TANTALUM 10MF/10V
C328	1-107-826-11	s	CAPACITOR,CHIP CERAMIC 0.1MF
C329	1-107-826-11	s	CAPACITOR,CHIP CERAMIC 0.1MF
C330	1-107-826-11	s	CAPACITOR,CHIP CERAMIC 0.1MF
C331	1-162-911-11	s	CAPACITOR,CERAMIC 6PF/50V 1608
C332	1-107-826-11	s	CAPACITOR,CHIP CERAMIC 0.1MF
C333	1-107-826-11	s	CAPACITOR,CHIP CERAMIC 0.1MF
C334	1-107-826-11	s	CAPACITOR,CHIP CERAMIC 0.1MF
C335	1-107-826-11	s	CAPACITOR,CHIP CERAMIC 0.1MF
C336	1-162-907-11	s	CAPACITOR,CERAMIC 2PF/50V(CK)
C337	1-126-393-11	s	CAPACITOR ELECT 33MF/10V(CHIP)
C401	1-107-826-11	s	CAPACITOR,CHIP CERAMIC 0.1MF
C402	1-162-915-11	s	CAPACITOR,CERAMIC 10PF/50V CH
C403	1-162-915-11	s	CAPACITOR,CERAMIC 10PF/50V CH
C404	1-104-851-11	s	CAPACITOR,TANTALUM 10MF/10V
C405	1-107-826-11	s	CAPACITOR,CHIP CERAMIC 0.1MF
C406	1-107-826-11	s	CAPACITOR,CHIP CERAMIC 0.1MF
C407	1-107-826-11	s	CAPACITOR,CHIP CERAMIC 0.1MF
C408	1-107-826-11	s	CAPACITOR,CHIP CERAMIC 0.1MF
C409	1-107-826-11	s	CAPACITOR,CHIP CERAMIC 0.1MF
CN201	1-794-816-11	s	CONNECTOR, COAXIAL (BNC TYPE)
D301	8-719-071-10	s	DIODE CL-191HR-CD-T
D401	8-719-024-81	s	DIODE 1SS300-TE85L
FB301	1-543-644-11	s	BEAD, FERRITE (CHIP)
FB302	1-543-644-11	s	BEAD, FERRITE (CHIP)
FB303	1-543-644-11	s	BEAD, FERRITE (CHIP)
FB304	1-543-644-11	s	BEAD, FERRITE (CHIP)

(SDI-61A BOARD (DSBK-1602))

Ref. No. or Q'ty	Part No.	SP	Description
IC101	8-759-259-77	s	IC PQ20VZ5U
IC102	8-729-039-85	s	IC UPC29L05T
IC301	8-759-369-93	s	IC CXD8969AR
IC302	8-752-078-32	s	IC CXB1341R
IC303	8-759-531-92	s	IC TC7WH04FU(TE12R)
IC401	8-759-524-24	o	IC TC7WT241FU(TE12R)
IC403	8-759-524-51	s	IC TC74VHC573FT (EL)
IC404	8-759-524-07	s	IC TC74VHC138FT(EL)
IC405	8-759-524-28	s	IC TC74VHC245FT(EL)
IC406	8-759-196-96	s	IC TC7SH08FU (TE85R)
L101	1-424-643-11	s	COIL, CHOKE 10UH
L301	1-412-939-11	s	INDUCTOR 1.0UH (2520)
L401	1-410-377-31	s	INDUCTOR,CHIP 4.7UH (3225)
Q301	8-729-028-91	s	TRANSISTOR DTA144EUA-T106
Q302	8-729-028-91	s	TRANSISTOR DTA144EUA-T106
Q303	8-729-029-14	s	TRANSISTOR DTC144EUA-T106
Q304	8-729-105-68	s	TRANSISTOR 2SC3356-K
Q305	8-729-105-68	s	TRANSISTOR 2SC3356-K
Q306	8-729-105-68	s	TRANSISTOR 2SC3356-K
Q401	8-729-029-14	s	TRANSISTOR DTC144EUA-T106
R101	1-218-851-11	s	RESISTOR,CHIP 1.5K 1/16W(1608)
R102	1-218-846-11	s	RESISTOR,CHIP 910 1/16W (1608)
R301	1-216-864-11	s	RESISTOR,CHIP 0 1/16W (1608)
R302	1-216-864-11	s	RESISTOR,CHIP 0 1/16W (1608)
R303	1-216-864-11	s	RESISTOR,CHIP 0 1/16W (1608)
R305	1-216-801-11	s	RESISTOR,CHIP 22 1/16W (1608)
R306	1-218-875-11	s	RESISTOR,CHIP 15K 1/16W (1608)
R307	1-218-875-11	s	RESISTOR,CHIP 15K 1/16W (1608)
R308	1-216-864-11	s	RESISTOR,CHIP 0 1/16W (1608)
R309	1-211-985-11	s	RESISTOR,CHIP 47 1/16W (1608)
R310	1-218-855-11	s	RESISTOR,CHIP 2.2K 1/16W(1608)
R311	1-218-847-11	s	RESISTOR, CHIP 1K 1/16W (1608)
R312	1-218-847-11	s	RESISTOR, CHIP 1K 1/16W (1608)
R313	1-218-845-11	s	RESISTOR,CHIP 820 1/16W (1608)
R315	1-218-873-11	s	RESISTOR,CHIP 12K 1/16W (1608)
R317	1-218-855-11	s	RESISTOR,CHIP 2.2K 1/16W(1608)
R318	1-218-847-11	s	RESISTOR, CHIP 1K 1/16W (1608)
R319	1-218-855-11	s	RESISTOR,CHIP 2.2K 1/16W(1608)
R320	1-216-815-11	s	RESISTOR,CHIP 330 1/16W 1608
R321	1-216-829-11	s	RESISTOR,CHIP 4.7K 1/16W(1608)
R322	1-218-839-11	s	RESISTOR,CHIP 470 1/16W (1608)
R326	1-218-833-11	s	RESISTOR,CHIP 270 1/16W (1608)
R327	1-218-833-11	s	RESISTOR,CHIP 270 1/16W (1608)
R328	1-211-985-11	s	RESISTOR,CHIP 47 1/16W (1608)
R329	1-211-989-11	s	RESISTOR,CHIP 68 1/16W (1608)
R330	1-211-978-11	s	RESISTOR,CHIP 24 1/16W (1608)
R331	1-211-984-11	s	RESISTOR,CHIP 43 1/16W (1608)
R332	1-218-829-11	s	RESISTOR,CHIP 180 1/16W (1608)
R333	1-211-989-11	s	RESISTOR,CHIP 68 1/16W (1608)
R334	1-211-978-11	s	RESISTOR,CHIP 24 1/16W (1608)
R335	1-218-839-11	s	RESISTOR,CHIP 470 1/16W (1608)
R336	1-211-985-11	s	RESISTOR,CHIP 47 1/16W (1608)
R337	1-211-985-11	s	RESISTOR,CHIP 47 1/16W (1608)
R338	1-218-827-11	s	RESISTOR,CHIP 150 1/16W (1608)
R339	1-218-847-11	s	RESISTOR, CHIP 1K 1/16W (1608)
R340	1-211-989-11	s	RESISTOR,CHIP 68 1/16W (1608)
R341	1-218-839-11	s	RESISTOR,CHIP 470 1/16W (1608)
R403	1-216-845-11	s	RESISTOR,CHIP 100K 1/16W(1608)

(SDI-61A BOARD (DSBK-1602))

Ref. No. or Q'ty	Part No.	SP	Description
R404	1-216-845-11	s	RESISTOR,CHIP 100K 1/16W(1608)
R405	1-216-833-11	s	RESISTOR,CHIP 10K 1/16W (1608)
R407	1-216-833-11	s	RESISTOR,CHIP 10K 1/16W (1608)
R408	1-216-864-11	s	RESISTOR,CHIP 0 1/16W (1608)
R409	1-216-821-11	s	RESISTOR,CHIP 1.0K 1/16W(1608)
R410	1-216-864-11	s	RESISTOR,CHIP 0 1/16W (1608)
R411	1-216-864-11	s	RESISTOR,CHIP 0 1/16W (1608)
R414	1-216-833-11	s	RESISTOR,CHIP 10K 1/16W (1608)
R415	1-216-833-11	s	RESISTOR,CHIP 10K 1/16W (1608)
RB301	1-239-621-11	s	NETWORK RESISTOR 22 (1608)
RB302	1-239-621-11	s	NETWORK RESISTOR 22 (1608)
RB303	1-239-412-11	s	NETWORK, RESISTOR 100 (1608)
RB304	1-239-412-11	s	NETWORK, RESISTOR 100 (1608)
RB305	1-239-412-11	s	NETWORK, RESISTOR 100 (1608)
RB401	1-239-389-11	s	RESISTOR,NETWORK 47K (1608)
RB402	1-239-389-11	s	RESISTOR,NETWORK 47K (1608)
RB403	1-236-904-11	s	RESISTOR NETWORK 1K (1608)
RB404	1-239-412-11	s	NETWORK, RESISTOR 100 (1608)
RV301	1-225-789-21	s	RES, ADJ, CERMET 2K
X401	1-579-988-11	s	VIBRATOR, CERAMIC

SDI-62 BOARD (DSBK-1801)

Ref. No. or Q'ty	Part No.	SP	Description
4pcs	7-685-646-79	s	SCREW +BVTP 3X8(EP-FE/ZNBK/CM2
2pcs	7-682-903-01	s	SCREW +PWH 3X5(EP-FE/ZN/CM2)
C101	1-104-851-11	s	CAPACITOR,TANTALUM 10MF/10V
C102	1-107-826-11	s	CAPACITOR,CHIP CERAMIC 0.1MF
C103	1-109-982-11	s	CAPACITOR,CHIP CERAMIC 1MF/10V
C104	1-107-826-11	s	CAPACITOR,CHIP CERAMIC 0.1MF
C105	1-162-923-11	s	CAPACITOR,CERAMIC 47PF/50V CH
C106	1-104-851-11	s	CAPACITOR,TANTALUM 10MF/10V
C107	1-107-826-11	s	CAPACITOR,CHIP CERAMIC 0.1MF
C108	1-109-982-11	s	CAPACITOR,CHIP CERAMIC 1MF/10V
C109	1-107-826-11	s	CAPACITOR,CHIP CERAMIC 0.1MF
C110	1-107-826-11	s	CAPACITOR,CHIP CERAMIC 0.1MF
C111	1-162-915-11	s	CAPACITOR,CERAMIC 10PF/50V CH
C112	1-107-826-11	s	CAPACITOR,CHIP CERAMIC 0.1MF
C113	1-107-826-11	s	CAPACITOR,CHIP CERAMIC 0.1MF
C114	1-104-851-11	s	CAPACITOR,TANTALUM 10MF/10V
C117	1-107-826-11	s	CAPACITOR,CHIP CERAMIC 0.1MF
C118	1-107-826-11	s	CAPACITOR,CHIP CERAMIC 0.1MF
C119	1-104-851-11	s	CAPACITOR,TANTALUM 10MF/10V
C120	1-107-826-11	s	CAPACITOR,CHIP CERAMIC 0.1MF
C121	1-107-826-11	s	CAPACITOR,CHIP CERAMIC 0.1MF
C122	1-107-826-11	s	CAPACITOR,CHIP CERAMIC 0.1MF
C125	1-104-851-11	s	CAPACITOR,TANTALUM 10MF/10V
C127	1-104-851-11	s	CAPACITOR,TANTALUM 10MF/10V
C128	1-107-826-11	s	CAPACITOR,CHIP CERAMIC 0.1MF
C130	1-107-826-11	s	CAPACITOR,CHIP CERAMIC 0.1MF
C131	1-107-826-11	s	CAPACITOR,CHIP CERAMIC 0.1MF
C132	1-107-826-11	s	CAPACITOR,CHIP CERAMIC 0.1MF
C133	1-107-826-11	s	CAPACITOR,CHIP CERAMIC 0.1MF
C134	1-107-826-11	s	CAPACITOR,CHIP CERAMIC 0.1MF
C135	1-126-393-11	s	CAPACITOR ELECT 33MF/10V(CHIP)
C136	1-107-826-11	s	CAPACITOR,CHIP CERAMIC 0.1MF
C137	1-162-907-11	s	CAPACITOR,CERAMIC 2PF/50V(CK)
C138	1-107-826-11	s	CAPACITOR,CHIP CERAMIC 0.1MF
C139	1-107-826-11	s	CAPACITOR,CHIP CERAMIC 0.1MF
C201	1-107-826-11	s	CAPACITOR,CHIP CERAMIC 0.1MF
C202	1-107-826-11	s	CAPACITOR,CHIP CERAMIC 0.1MF
C203	1-107-826-11	s	CAPACITOR,CHIP CERAMIC 0.1MF
C204	1-107-826-11	s	CAPACITOR,CHIP CERAMIC 0.1MF
C205	1-107-826-11	s	CAPACITOR,CHIP CERAMIC 0.1MF
C206	1-107-826-11	s	CAPACITOR,CHIP CERAMIC 0.1MF
C208	1-107-826-11	s	CAPACITOR,CHIP CERAMIC 0.1MF
C209	1-126-393-11	s	CAPACITOR ELECT 33MF/10V(CHIP)
C210	1-107-826-11	s	CAPACITOR,CHIP CERAMIC 0.1MF
C211	1-107-826-11	s	CAPACITOR,CHIP CERAMIC 0.1MF
C212	1-107-826-11	s	CAPACITOR,CHIP CERAMIC 0.1MF
C214	1-107-826-11	s	CAPACITOR,CHIP CERAMIC 0.1MF
C215	1-107-826-11	s	CAPACITOR,CHIP CERAMIC 0.1MF
C216	1-107-826-11	s	CAPACITOR,CHIP CERAMIC 0.1MF
C217	1-107-826-11	s	CAPACITOR,CHIP CERAMIC 0.1MF
C218	1-107-826-11	s	CAPACITOR,CHIP CERAMIC 0.1MF
C219	1-115-416-11	s	CAPACITOR,CERAMIC 1000PF/25V
C220	1-107-826-11	s	CAPACITOR,CHIP CERAMIC 0.1MF
C221	1-107-826-11	s	CAPACITOR,CHIP CERAMIC 0.1MF
C301	1-107-826-11	s	CAPACITOR,CHIP CERAMIC 0.1MF
C302	1-104-608-11	s	CAPACITOR, ELECT 33MF/6.3V
C303	1-126-393-11	s	CAPACITOR ELECT 33MF/10V(CHIP)
C304	1-126-393-11	s	CAPACITOR ELECT 33MF/10V(CHIP)

(SDI-62 BOARD (DSBK-1801))

Ref. No. or Q'ty	Part No.	SP	Description
C305	1-107-826-11	s	CAPACITOR,CHIP CERAMIC 0.1MF
C306	1-104-608-11	s	CAPACITOR, ELECT 33MF/6.3V
C307	1-107-826-11	s	CAPACITOR,CHIP CERAMIC 0.1MF
C308	1-107-826-11	s	CAPACITOR,CHIP CERAMIC 0.1MF
C309	1-107-826-11	s	CAPACITOR,CHIP CERAMIC 0.1MF
C310	1-107-826-11	s	CAPACITOR,CHIP CERAMIC 0.1MF
C311	1-107-826-11	s	CAPACITOR,CHIP CERAMIC 0.1MF
C312	1-115-416-11	s	CAPACITOR,CERAMIC 1000PF/25V
C313	1-107-826-11	s	CAPACITOR,CHIP CERAMIC 0.1MF
C314	1-107-826-11	s	CAPACITOR,CHIP CERAMIC 0.1MF
C315	1-107-826-11	s	CAPACITOR,CHIP CERAMIC 0.1MF
C316	1-107-826-11	s	CAPACITOR,CHIP CERAMIC 0.1MF
C317	1-107-826-11	s	CAPACITOR,CHIP CERAMIC 0.1MF
C318	1-107-826-11	s	CAPACITOR,CHIP CERAMIC 0.1MF
C319	1-107-826-11	s	CAPACITOR,CHIP CERAMIC 0.1MF
C320	1-107-826-11	s	CAPACITOR,CHIP CERAMIC 0.1MF
C321	1-107-826-11	s	CAPACITOR,CHIP CERAMIC 0.1MF
C322	1-107-826-11	s	CAPACITOR,CHIP CERAMIC 0.1MF
C323	1-107-826-11	s	CAPACITOR,CHIP CERAMIC 0.1MF
C324	1-107-826-11	s	CAPACITOR,CHIP CERAMIC 0.1MF
C326	1-107-826-11	s	CAPACITOR,CHIP CERAMIC 0.1MF
C401	1-107-826-11	s	CAPACITOR,CHIP CERAMIC 0.1MF
C402	1-107-826-11	s	CAPACITOR,CHIP CERAMIC 0.1MF
C404	1-104-851-11	s	CAPACITOR,TANTALUM 10MF/10V
C405	1-104-851-11	s	CAPACITOR,TANTALUM 10MF/10V
C406	1-107-826-11	s	CAPACITOR,CHIP CERAMIC 0.1MF
C407	1-107-826-11	s	CAPACITOR,CHIP CERAMIC 0.1MF
C409	1-107-826-11	s	CAPACITOR,CHIP CERAMIC 0.1MF
C410	1-107-826-11	s	CAPACITOR,CHIP CERAMIC 0.1MF
C412	1-107-826-11	s	CAPACITOR,CHIP CERAMIC 0.1MF
C413	1-107-826-11	s	CAPACITOR,CHIP CERAMIC 0.1MF
C414	1-107-826-11	s	CAPACITOR,CHIP CERAMIC 0.1MF
C416	1-104-851-11	s	CAPACITOR,TANTALUM 10MF/10V
C417	1-107-826-11	s	CAPACITOR,CHIP CERAMIC 0.1MF
C418	1-107-826-11	s	CAPACITOR,CHIP CERAMIC 0.1MF
C419	1-107-826-11	s	CAPACITOR,CHIP CERAMIC 0.1MF
C420	1-162-915-11	s	CAPACITOR,CERAMIC 10PF/50V CH
C421	1-107-826-11	s	CAPACITOR,CHIP CERAMIC 0.1MF
C422	1-107-826-11	s	CAPACITOR,CHIP CERAMIC 0.1MF
C423	1-107-826-11	s	CAPACITOR,CHIP CERAMIC 0.1MF
C424	1-104-851-11	s	CAPACITOR,TANTALUM 10MF/10V
C425	1-107-826-11	s	CAPACITOR,CHIP CERAMIC 0.1MF
C426	1-107-826-11	s	CAPACITOR,CHIP CERAMIC 0.1MF
C427	1-107-826-11	s	CAPACITOR,CHIP CERAMIC 0.1MF
C428	1-162-911-11	s	CAPACITOR,CERAMIC 6PF/50V 1608
C429	1-107-826-11	s	CAPACITOR,CHIP CERAMIC 0.1MF
C430	1-107-826-11	s	CAPACITOR,CHIP CERAMIC 0.1MF
C431	1-107-826-11	s	CAPACITOR,CHIP CERAMIC 0.1MF
C432	1-107-826-11	s	CAPACITOR,CHIP CERAMIC 0.1MF
C433	1-107-826-11	s	CAPACITOR,CHIP CERAMIC 0.1MF
C434	1-107-826-11	s	CAPACITOR,CHIP CERAMIC 0.1MF
C435	1-107-826-11	s	CAPACITOR,CHIP CERAMIC 0.1MF
C436	1-126-393-11	s	CAPACITOR ELECT 33MF/10V(CHIP)
C437	1-162-907-11	s	CAPACITOR,CERAMIC 2PF/50V(CK)
C438	1-162-907-11	s	CAPACITOR,CERAMIC 2PF/50V(CK)
C501	1-162-908-11	s	CAPACITOR,CERAMIC 3PF/50V 1608
C502	1-162-908-11	s	CAPACITOR,CERAMIC 3PF/50V 1608
C503	1-115-416-11	s	CAPACITOR,CERAMIC 1000PF/25V
C504	1-115-416-11	s	CAPACITOR,CERAMIC 1000PF/25V

(SDI-62 BOARD (DSBK-1801))

Ref. No. or Q'ty	Part No.	SP	Description
C505	1-165-176-11	s	CAPACITOR,CERAMIC 47000PF/16V
C506	1-165-176-11	s	CAPACITOR,CERAMIC 47000PF/16V
C507	1-162-925-11	s	CAPACITOR,CERAMIC 68PF/50V CH
C508	1-162-925-11	s	CAPACITOR,CERAMIC 68PF/50V CH
C509	1-109-982-11	s	CAPACITOR,CHIP CERAMIC 1MF/10V
C510	1-109-982-11	s	CAPACITOR,CHIP CERAMIC 1MF/10V
C511	1-115-152-11	s	CAPACITOR,ELECT 22MF/6.3V(BP)
C512	1-115-152-11	s	CAPACITOR,ELECT 22MF/6.3V(BP)
C513	1-126-393-11	s	CAPACITOR ELECT 33MF/10V(CHIP)
C514	1-107-826-11	s	CAPACITOR,CHIP CERAMIC 0.1MF
C515	1-109-982-11	s	CAPACITOR,CHIP CERAMIC 1MF/10V
C516	1-107-826-11	s	CAPACITOR,CHIP CERAMIC 0.1MF
C517	1-109-982-11	s	CAPACITOR,CHIP CERAMIC 1MF/10V
C518	1-107-826-11	s	CAPACITOR,CHIP CERAMIC 0.1MF
C519	1-135-177-21	s	CAPACITOR TANTALUM 1MF/25V
C520	1-107-826-11	s	CAPACITOR,CHIP CERAMIC 0.1MF
C522	1-135-177-21	s	CAPACITOR TANTALUM 1MF/25V
C523	1-126-393-11	s	CAPACITOR ELECT 33MF/10V(CHIP)
C524	1-107-826-11	s	CAPACITOR,CHIP CERAMIC 0.1MF
C525	1-126-393-11	s	CAPACITOR ELECT 33MF/10V(CHIP)
C602	1-107-826-11	s	CAPACITOR,CHIP CERAMIC 0.1MF
C603	1-107-826-11	s	CAPACITOR,CHIP CERAMIC 0.1MF
C604	1-107-826-11	s	CAPACITOR,CHIP CERAMIC 0.1MF
C605	1-107-826-11	s	CAPACITOR,CHIP CERAMIC 0.1MF
C606	1-107-826-11	s	CAPACITOR,CHIP CERAMIC 0.1MF
C607	1-107-826-11	s	CAPACITOR,CHIP CERAMIC 0.1MF
C608	1-107-826-11	s	CAPACITOR,CHIP CERAMIC 0.1MF
C609	1-107-826-11	s	CAPACITOR,CHIP CERAMIC 0.1MF
C610	1-107-826-11	s	CAPACITOR,CHIP CERAMIC 0.1MF
C611	1-107-826-11	s	CAPACITOR,CHIP CERAMIC 0.1MF
C612	1-107-826-11	s	CAPACITOR,CHIP CERAMIC 0.1MF
C613	1-107-826-11	s	CAPACITOR,CHIP CERAMIC 0.1MF
C614	1-107-826-11	s	CAPACITOR,CHIP CERAMIC 0.1MF
C615	1-107-826-11	s	CAPACITOR,CHIP CERAMIC 0.1MF
C616	1-107-826-11	s	CAPACITOR,CHIP CERAMIC 0.1MF
C617	1-107-826-11	s	CAPACITOR,CHIP CERAMIC 0.1MF
C618	1-107-826-11	s	CAPACITOR,CHIP CERAMIC 0.1MF
C619	1-107-826-11	s	CAPACITOR,CHIP CERAMIC 0.1MF
C620	1-107-826-11	s	CAPACITOR,CHIP CERAMIC 0.1MF
C621	1-107-826-11	s	CAPACITOR,CHIP CERAMIC 0.1MF
C622	1-126-393-11	s	CAPACITOR ELECT 33MF/10V(CHIP)
C623	1-126-393-11	s	CAPACITOR ELECT 33MF/10V(CHIP)
C701	1-164-315-11	s	CAPACITOR,CERAMIC 470PF/50V CH
C702	1-107-826-11	s	CAPACITOR,CHIP CERAMIC 0.1MF
C703	1-162-915-11	s	CAPACITOR,CERAMIC 10PF/50V CH
C704	1-162-915-11	s	CAPACITOR,CERAMIC 10PF/50V CH
C705	1-104-608-11	s	CAPACITOR, ELECT 33MF/6.3V
C706	1-107-826-11	s	CAPACITOR,CHIP CERAMIC 0.1MF
C707	1-107-826-11	s	CAPACITOR,CHIP CERAMIC 0.1MF
C708	1-107-826-11	s	CAPACITOR,CHIP CERAMIC 0.1MF
C709	1-107-826-11	s	CAPACITOR,CHIP CERAMIC 0.1MF
C710	1-107-826-11	s	CAPACITOR,CHIP CERAMIC 0.1MF
C711	1-107-826-11	s	CAPACITOR,CHIP CERAMIC 0.1MF
C712	1-107-826-11	s	CAPACITOR,CHIP CERAMIC 0.1MF
C713	1-107-826-11	s	CAPACITOR,CHIP CERAMIC 0.1MF
C714	1-107-826-11	s	CAPACITOR,CHIP CERAMIC 0.1MF
C715	1-107-826-11	s	CAPACITOR,CHIP CERAMIC 0.1MF
C716	1-107-826-11	s	CAPACITOR,CHIP CERAMIC 0.1MF
C717	1-107-826-11	s	CAPACITOR,CHIP CERAMIC 0.1MF

(SDI-62 BOARD (DSBK-1801))

Ref. No. or Q'ty	Part No.	SP	Description
CN101	1-794-815-11	s	CONNECTOR, COAXIAL (BNC TYPE)
CN102	1-794-815-11	s	CONNECTOR, COAXIAL (BNC TYPE)
CN103	1-774-966-11	o	CONNECTOR, BNC (RECEPTACLE)
D1	8-719-024-81	s	DIODE 1SS300-TE85L
D201	8-719-071-10	s	DIODE CL-191HR-CD-T
D202	8-719-071-10	s	DIODE CL-191HR-CD-T
D203	8-719-024-81	s	DIODE 1SS300-TE85L
D204	8-719-024-81	s	DIODE 1SS300-TE85L
D205	8-719-941-23	s	DIODE DA204U
D301	8-719-941-23	s	DIODE DA204U
D401	8-719-071-10	s	DIODE CL-191HR-CD-T
D501	8-719-941-23	s	DIODE DA204U
D502	8-719-941-23	s	DIODE DA204U
FB101	1-543-644-11	s	BEAD, FERRITE (CHIP)
FB102	1-543-644-11	s	BEAD, FERRITE (CHIP)
FB103	1-543-644-11	s	BEAD, FERRITE (CHIP)
FB104	1-543-644-11	s	BEAD, FERRITE (CHIP)
FB105	1-543-644-11	s	BEAD, FERRITE (CHIP)
FB106	1-543-644-11	s	BEAD, FERRITE (CHIP)
FB107	1-543-644-11	s	BEAD, FERRITE (CHIP)
FB401	1-543-644-11	s	BEAD, FERRITE (CHIP)
FB402	1-543-644-11	s	BEAD, FERRITE (CHIP)
FB403	1-543-644-11	s	BEAD, FERRITE (CHIP)
FB404	1-543-644-11	s	BEAD, FERRITE (CHIP)
FB405	1-543-644-11	s	BEAD, FERRITE (CHIP)
FL500	1-239-896-12	s	FILTER, EMI (SMD)
FL501	1-239-896-12	s	FILTER, EMI (SMD)
FL502	1-239-896-12	s	FILTER, EMI (SMD)
FL503	1-239-896-12	s	FILTER, EMI (SMD)
IC101	8-752-078-34	s	IC CXB1342R
IC102	8-759-490-41	s	IC TC74VHCT541AFT(EL)
IC103	8-759-490-41	s	IC TC74VHCT541AFT(EL)
IC201	8-759-481-08	s	IC TC7SET02FU (TE85R)
IC202	8-759-196-97	s	IC TC7SH32FU (TE85R)
IC203	8-759-172-72	s	IC CXD8386AQ
IC204	8-759-524-18	s	IC TC74VHC163FT(EL)
IC205	8-759-524-32	s	IC TC74VHC367FT(EL)
IC206	8-759-289-69	s	IC CXD8280AQ
IC207	8-759-567-31	s	IC PLL1700E/2K
IC208	8-759-481-08	s	IC TC7SET02FU (TE85R)
IC209	8-759-530-31	s	IC TC74VHC4040FT(EL)
IC210	8-759-524-32	s	IC TC74VHC367FT(EL)
IC211	8-759-524-50	s	IC TC74VHC541FT(EL)
IC212	8-759-491-46	s	IC TC74VHCT04AFT (EL)
IC213	8-759-523-94	s	IC TC74VHC32FT(EL)
IC214	8-759-523-97	s	IC TC74VHC123AFT(EL)
IC215	8-759-523-97	s	IC TC74VHC123AFT(EL)
IC216	8-759-523-81	s	IC TC74VHC08FT(EL)
IC217	8-759-656-54	s	IC TC7WH14FK(TE85R)
IC301	8-759-259-77	s	IC PQ20VZ5U
IC302	8-759-182-84	s	IC PQ05SZ5U
IC303	8-759-196-93	s	IC TC7SH00FU-TE85R
IC304	8-759-490-42	s	IC TC74VHCT574AFT(EL)
IC305	8-759-490-42	s	IC TC74VHCT574AFT(EL)
IC306	8-759-490-41	s	IC TC74VHCT541AFT(EL)
IC307	8-759-524-18	s	IC TC74VHC163FT(EL)
IC308	8-759-519-12	s	IC CXD8281Q
IC309	8-759-172-73	s	IC CXD8385Q

(SDI-62 BOARD (DSBK-1801))

Ref. No. or Q'ty	Part No.	SP	Description
IC310	8-759-523-84	s	IC TC74VHC14FT (EL)
IC311	8-759-523-94	s	IC TC74VHC32FT(EL)
IC312	8-759-344-84	s	IC CXD8953Q
IC401	8-759-524-32	s	IC TC74VHC367FT(EL)
IC402	8-759-524-32	s	IC TC74VHC367FT(EL)
IC403	8-752-078-32	s	IC CXB1341R
IC501	8-759-471-28	s	IC MAX843ISA-T
IC502	8-759-055-67	s	IC SN75107ANS-LS
IC503	8-759-177-02	s	IC NJM2267M
IC602	8-759-524-50	s	IC TC74VHC541FT(EL)
IC603	8-759-590-19	s	IC CXD9068BR
IC604	8-759-447-77	s	IC TC7WH74FU (TR12R)
IC605	8-759-524-24	o	IC TC7WT241FU(TE12R)
IC606	8-759-524-32	s	IC TC74VHC367FT(EL)
IC607	8-759-530-31	s	IC TC74VHC4040FT(EL)
IC608	8-759-530-31	s	IC TC74VHC4040FT(EL)
IC609	8-759-524-32	s	IC TC74VHC367FT(EL)
IC610	8-759-481-08	s	IC TC7SET02FU (TE85R)
IC611	8-759-481-08	s	IC TC7SET02FU (TE85R)
IC612	8-759-485-79	s	IC TC7SET08FU (TE85L)
IC613	8-759-485-79	s	IC TC7SET08FU (TE85L)
IC614	8-759-669-75	s	IC TLC2932IPWR
IC615	8-759-669-75	s	IC TLC2932IPWR
IC701	8-759-490-41	s	IC TC74VHCT541AFT(EL)
IC702	8-759-524-24	o	IC TC7WT241FU(TE12R)
IC704	8-759-578-68	s	IC SN74LVCC4245APWR
IC705	8-759-491-54	s	IC TC74VHCT573AFT(EL)
IC706	8-759-524-07	s	IC TC74VHC138FT(EL)
IC707	8-759-524-07	s	IC TC74VHC138FT(EL)
IC708	8-759-524-50	s	IC TC74VHC541FT(EL)
IC709	8-759-196-97	s	IC TC7SH32FU (TE85R)
IC710	8-759-524-28	s	IC TC74VHC245FT(EL)
IC711	8-759-490-41	s	IC TC74VHCT541AFT(EL)
IC712	8-759-523-92	s	IC TC74VHC21FT(EL)
IC713	8-759-566-06	s	IC TC7WH08FU(TE12R)
L101	1-410-797-11	s	CHIP INDUCTOR 0.015UH (3225)
L102	1-412-939-11	s	INDUCTOR 1.0UH (2520)
L201	1-410-377-31	s	INDUCTOR,CHIP 4.7UH (3225)
L301	1-424-643-11	s	COIL, CHOKE 10UH
L302	1-424-643-11	s	COIL, CHOKE 10UH
L501	1-412-279-31	s	CHIP INDUCTOR 270UH (3225)
L502	1-412-279-31	s	CHIP INDUCTOR 270UH (3225)
L503	1-410-378-11	s	INDUCTOR,CHIP 5.6UH (3225)
L504	1-410-378-11	s	INDUCTOR,CHIP 5.6UH (3225)
L505	1-410-377-31	s	INDUCTOR,CHIP 4.7UH (3225)
L506	1-410-377-31	s	INDUCTOR,CHIP 4.7UH (3225)
L601	1-410-377-31	s	INDUCTOR,CHIP 4.7UH (3225)
L602	1-410-377-31	s	INDUCTOR,CHIP 4.7UH (3225)
L701	1-410-377-31	s	INDUCTOR,CHIP 4.7UH (3225)
Q101	8-729-029-14	s	TRANSISTOR DTC144EUA-T106
Q102	8-729-028-91	s	TRANSISTOR DTA144EUA-T106
Q103	8-729-105-68	s	TRANSISTOR 2SC3356-K
Q104	8-729-105-68	s	TRANSISTOR 2SC3356-K
Q105	8-729-105-68	s	TRANSISTOR 2SC3356-K
Q201	8-729-028-91	s	TRANSISTOR DTA144EUA-T106
Q202	8-729-028-91	s	TRANSISTOR DTA144EUA-T106
Q301	8-729-029-14	s	TRANSISTOR DTC144EUA-T106
Q302	8-729-029-14	s	TRANSISTOR DTC144EUA-T106
Q401	8-729-028-91	s	TRANSISTOR DTA144EUA-T106

(SDI-62 BOARD (DSBK-1801))

Ref. No. or Q'ty	Part No.	SP	Description
Q402	8-729-028-91	s	TRANSISTOR DTA144EUA-T106
Q403	8-729-029-14	s	TRANSISTOR DTC144EUA-T106
Q404	8-729-105-68	s	TRANSISTOR 2SC3356-K
Q405	8-729-105-68	s	TRANSISTOR 2SC3356-K
Q406	8-729-105-68	s	TRANSISTOR 2SC3356-K
Q407	8-729-105-68	s	TRANSISTOR 2SC3356-K
Q701	8-729-029-14	s	TRANSISTOR DTC144EUA-T106
Q702	8-729-029-14	s	TRANSISTOR DTC144EUA-T106
R102	1-218-839-11	s	RESISTOR,CHIP 470 1/16W (1608)
R103	1-216-817-11	s	RESISTOR,CHIP 470 1/16W 1608
R104	1-218-847-11	s	RESISTOR, CHIP 1K 1/16W (1608)
R105	1-211-990-11	s	RESISTOR,CHIP 75 1/16W (1608)
R107	1-218-847-11	s	RESISTOR, CHIP 1K 1/16W (1608)
R108	1-211-990-11	s	RESISTOR,CHIP 75 1/16W (1608)
R109	1-211-990-11	s	RESISTOR,CHIP 75 1/16W (1608)
R110	1-218-873-11	s	RESISTOR,CHIP 12K 1/16W (1608)
R111	1-216-857-11	s	RESISTOR,CHIP 1M 1/16W(1608)
R112	1-211-990-11	s	RESISTOR,CHIP 75 1/16W (1608)
R113	1-218-831-11	s	RESISTOR, CHIP 220 1/16W(1608)
R114	1-211-990-11	s	RESISTOR,CHIP 75 1/16W (1608)
R115	1-218-847-11	s	RESISTOR, CHIP 1K 1/16W (1608)
R116	1-218-855-11	s	RESISTOR,CHIP 2.2K 1/16W(1608)
R117	1-216-797-11	s	RESISTOR,CHIP 10 1/16W 1608
R118	1-216-797-11	s	RESISTOR,CHIP 10 1/16W 1608
R119	1-216-797-11	s	RESISTOR,CHIP 10 1/16W 1608
R120	1-216-797-11	s	RESISTOR,CHIP 10 1/16W 1608
R121	1-218-833-11	s	RESISTOR,CHIP 270 1/16W (1608)
R122	1-218-855-11	s	RESISTOR,CHIP 2.2K 1/16W(1608)
R123	1-218-833-11	s	RESISTOR,CHIP 270 1/16W (1608)
R124	1-211-978-11	s	RESISTOR,CHIP 24 1/16W (1608)
R125	1-211-989-11	s	RESISTOR,CHIP 68 1/16W (1608)
R126	1-218-847-11	s	RESISTOR, CHIP 1K 1/16W (1608)
R127	1-211-989-11	s	RESISTOR,CHIP 68 1/16W (1608)
R128	1-211-978-11	s	RESISTOR,CHIP 24 1/16W (1608)
R129	1-211-990-11	s	RESISTOR,CHIP 75 1/16W (1608)
R130	1-218-855-11	s	RESISTOR,CHIP 2.2K 1/16W(1608)
R131	1-216-805-11	s	RESISTOR,CHIP 47 1/16W 1608
R132	1-218-827-11	s	RESISTOR,CHIP 150 1/16W (1608)
R133	1-216-821-11	s	RESISTOR,CHIP 1.0K 1/16W(1608)
R134	1-211-989-11	s	RESISTOR,CHIP 68 1/16W (1608)
R135	1-216-805-11	s	RESISTOR,CHIP 47 1/16W 1608
R136	1-216-805-11	s	RESISTOR,CHIP 47 1/16W 1608
R137	1-216-805-11	s	RESISTOR,CHIP 47 1/16W 1608
R201	1-216-817-11	s	RESISTOR,CHIP 470 1/16W 1608
R202	1-216-805-11	s	RESISTOR,CHIP 47 1/16W 1608
R203	1-216-833-11	s	RESISTOR,CHIP 10K 1/16W (1608)
R204	1-216-864-11	s	RESISTOR,CHIP 0 1/16W (1608)
R205	1-216-801-11	s	RESISTOR,CHIP 22 1/16W (1608)
R206	1-216-864-11	s	RESISTOR,CHIP 0 1/16W (1608)
R207	1-216-854-11	s	RESISTOR, CHIP 560K 1/16W 1608
R208	1-216-854-11	s	RESISTOR, CHIP 560K 1/16W 1608
R209	1-216-854-11	s	RESISTOR, CHIP 560K 1/16W 1608
R210	1-216-854-11	s	RESISTOR, CHIP 560K 1/16W 1608
R211	1-216-817-11	s	RESISTOR,CHIP 470 1/16W 1608
R212	1-216-851-11	s	RESISTOR,CHIP 330K 1/16W 1608
R213	1-216-801-11	s	RESISTOR,CHIP 22 1/16W (1608)
R214	1-216-801-11	s	RESISTOR,CHIP 22 1/16W (1608)
R215	1-216-845-11	s	RESISTOR,CHIP 100K 1/16W(1608)

(SDI-62 BOARD (DSBK-1801))

Ref. No. or Q'ty	Part No.	SP	Description
R216	1-216-845-11	s	RESISTOR,CHIP 100K 1/16W(1608)
R217	1-216-845-11	s	RESISTOR,CHIP 100K 1/16W(1608)
R301	1-218-851-11	s	RESISTOR,CHIP 1.5K 1/16W(1608)
R302	1-218-846-11	s	RESISTOR,CHIP 910 1/16W (1608)
R303	1-216-801-11	s	RESISTOR,CHIP 22 1/16W (1608)
R304	1-216-805-11	s	RESISTOR,CHIP 47 1/16W 1608
R305	1-216-864-11	s	RESISTOR,CHIP 0 1/16W (1608)
R306	1-216-809-11	s	RESISTOR,CHIP 100 1/16W 1608
R307	1-216-851-11	s	RESISTOR,CHIP 330K 1/16W 1608
R309	1-216-809-11	s	RESISTOR,CHIP 100 1/16W 1608
R310	1-216-809-11	s	RESISTOR,CHIP 100 1/16W 1608
R311	1-216-833-11	s	RESISTOR,CHIP 10K 1/16W (1608)
R313	1-216-833-11	s	RESISTOR,CHIP 10K 1/16W (1608)
R314	1-216-821-11	s	RESISTOR,CHIP 1.0K 1/16W(1608)
R315	1-216-821-11	s	RESISTOR,CHIP 1.0K 1/16W(1608)
R401	1-218-875-11	s	RESISTOR,CHIP 15K 1/16W (1608)
R402	1-218-875-11	s	RESISTOR,CHIP 15K 1/16W (1608)
R403	1-216-864-11	s	RESISTOR,CHIP 0 1/16W (1608)
R404	1-216-805-11	s	RESISTOR,CHIP 47 1/16W 1608
R405	1-218-855-11	s	RESISTOR,CHIP 2.2K 1/16W(1608)
R406	1-216-821-11	s	RESISTOR,CHIP 1.0K 1/16W(1608)
R407	1-216-821-11	s	RESISTOR,CHIP 1.0K 1/16W(1608)
R408	1-218-845-11	s	RESISTOR,CHIP 820 1/16W (1608)
R410	1-218-873-11	s	RESISTOR,CHIP 12K 1/16W (1608)
R412	1-218-855-11	s	RESISTOR,CHIP 2.2K 1/16W(1608)
R413	1-216-821-11	s	RESISTOR,CHIP 1.0K 1/16W(1608)
R414	1-218-855-11	s	RESISTOR,CHIP 2.2K 1/16W(1608)
R415	1-216-817-11	s	RESISTOR,CHIP 470 1/16W 1608
R416	1-218-831-11	s	RESISTOR, CHIP 220 1/16W(1608)
R417	1-216-829-11	s	RESISTOR,CHIP 4.7K 1/16W(1608)
R418	1-216-817-11	s	RESISTOR,CHIP 470 1/16W 1608
R420	1-218-833-11	s	RESISTOR,CHIP 270 1/16W (1608)
R421	1-218-833-11	s	RESISTOR,CHIP 270 1/16W (1608)
R422	1-211-985-11	s	RESISTOR,CHIP 47 1/16W (1608)
R423	1-211-989-11	s	RESISTOR,CHIP 68 1/16W (1608)
R424	1-211-978-11	s	RESISTOR,CHIP 24 1/16W (1608)
R425	1-211-984-11	s	RESISTOR,CHIP 43 1/16W (1608)
R426	1-218-829-11	s	RESISTOR,CHIP 180 1/16W (1608)
R427	1-211-989-11	s	RESISTOR,CHIP 68 1/16W (1608)
R428	1-211-978-11	s	RESISTOR,CHIP 24 1/16W (1608)
R429	1-218-839-11	s	RESISTOR,CHIP 470 1/16W (1608)
R430	1-211-985-11	s	RESISTOR,CHIP 47 1/16W (1608)
R431	1-211-985-11	s	RESISTOR,CHIP 47 1/16W (1608)
R432	1-211-985-11	s	RESISTOR,CHIP 47 1/16W (1608)
R433	1-218-827-11	s	RESISTOR,CHIP 150 1/16W (1608)
R434	1-218-827-11	s	RESISTOR,CHIP 150 1/16W (1608)
R435	1-218-847-11	s	RESISTOR, CHIP 1K 1/16W (1608)
R436	1-218-847-11	s	RESISTOR, CHIP 1K 1/16W (1608)
R437	1-211-989-11	s	RESISTOR,CHIP 68 1/16W (1608)
R438	1-211-989-11	s	RESISTOR,CHIP 68 1/16W (1608)
R501	1-218-848-11	s	RESISTOR,CHIP 1.1K 1/16W(1608)
R502	1-218-848-11	s	RESISTOR,CHIP 1.1K 1/16W(1608)
R503	1-211-987-11	s	RESISTOR,CHIP 56 1/16W (1608)
R504	1-211-987-11	s	RESISTOR,CHIP 56 1/16W (1608)
R505	1-211-990-11	s	RESISTOR,CHIP 75 1/16W (1608)
R506	1-211-990-11	s	RESISTOR,CHIP 75 1/16W (1608)
R507	1-218-845-11	s	RESISTOR,CHIP 820 1/16W (1608)
R508	1-218-845-11	s	RESISTOR,CHIP 820 1/16W (1608)
R509	1-211-980-11	s	RESISTOR,CHIP 30 1/16W(1608)

(SDI-62 BOARD (DSBK-1801))

Ref. No. or Q'ty	Part No.	SP	Description
R510	1-211-980-11	s	RESISTOR,CHIP 30 1/16W(1608)
R511	1-218-829-11	s	RESISTOR,CHIP 180 1/16W (1608)
R512	1-218-829-11	s	RESISTOR,CHIP 180 1/16W (1608)
R513	1-218-823-11	s	RESISTOR,CHIP 100 1/16W (1608)
R514	1-218-823-11	s	RESISTOR,CHIP 100 1/16W (1608)
R515	1-218-834-11	s	RESISTOR,CHIP 300 1/16W (1608)
R516	1-218-834-11	s	RESISTOR,CHIP 300 1/16W (1608)
R517	1-218-838-11	s	RESISTOR,CHIP 430 1/16W (1608)
R518	1-218-838-11	s	RESISTOR,CHIP 430 1/16W (1608)
R519	1-218-823-11	s	RESISTOR,CHIP 100 1/16W (1608)
R520	1-218-823-11	s	RESISTOR,CHIP 100 1/16W (1608)
R521	1-218-823-11	s	RESISTOR,CHIP 100 1/16W (1608)
R522	1-218-823-11	s	RESISTOR,CHIP 100 1/16W (1608)
R523	1-218-847-11	s	RESISTOR, CHIP 1K 1/16W (1608)
R524	1-218-847-11	s	RESISTOR, CHIP 1K 1/16W (1608)
R525	1-211-990-11	s	RESISTOR,CHIP 75 1/16W (1608)
R526	1-211-990-11	s	RESISTOR,CHIP 75 1/16W (1608)
R527	1-216-805-11	s	RESISTOR,CHIP 47 1/16W 1608
R528	1-216-805-11	s	RESISTOR,CHIP 47 1/16W 1608
R529	1-216-845-11	s	RESISTOR,CHIP 100K 1/16W(1608)
R530	1-216-845-11	s	RESISTOR,CHIP 100K 1/16W(1608)
R601	1-216-801-11	s	RESISTOR,CHIP 22 1/16W (1608)
R604	1-218-853-11	s	RESISTOR,CHIP 1.8K 1/16W(1608)
R605	1-218-853-11	s	RESISTOR,CHIP 1.8K 1/16W(1608)
R606	1-218-875-11	s	RESISTOR,CHIP 15K 1/16W (1608)
R607	1-218-875-11	s	RESISTOR,CHIP 15K 1/16W (1608)
R608	1-218-835-11	s	RESISTOR,CHIP 330 1/16W (1608)
R609	1-218-835-11	s	RESISTOR,CHIP 330 1/16W (1608)
R701	1-216-845-11	s	RESISTOR,CHIP 100K 1/16W(1608)
R704	1-216-845-11	s	RESISTOR,CHIP 100K 1/16W(1608)
R705	1-216-833-11	s	RESISTOR,CHIP 10K 1/16W (1608)
R707	1-216-833-11	s	RESISTOR,CHIP 10K 1/16W (1608)
R709	1-216-833-11	s	RESISTOR,CHIP 10K 1/16W (1608)
R710	1-216-821-11	s	RESISTOR,CHIP 1.0K 1/16W(1608)
R713	1-216-833-11	s	RESISTOR,CHIP 10K 1/16W (1608)
R714	1-216-833-11	s	RESISTOR,CHIP 10K 1/16W (1608)
R715	1-216-833-11	s	RESISTOR,CHIP 10K 1/16W (1608)
R716	1-216-833-11	s	RESISTOR,CHIP 10K 1/16W (1608)
RB101	1-239-409-11	s	RESISTOR NETWORK 47 (1608)
RB102	1-239-409-11	s	RESISTOR NETWORK 47 (1608)
RB103	1-239-409-11	s	RESISTOR NETWORK 47 (1608)
RB201	1-239-621-11	s	NETWORK RESISTOR 22 (1608)
RB202	1-239-621-11	s	NETWORK RESISTOR 22 (1608)
RB203	1-239-621-11	s	NETWORK RESISTOR 22 (1608)
RB204	1-239-621-11	s	NETWORK RESISTOR 22 (1608)
RB205	1-236-907-11	s	RESISTOR BLOCK 100K (1608)
RB206	1-239-309-11	s	RESISTOR ARRAY,CHIP 100K
RB207	1-236-907-11	s	RESISTOR BLOCK 100K (1608)
RB301	1-239-621-11	s	NETWORK RESISTOR 22 (1608)
RB302	1-239-621-11	s	NETWORK RESISTOR 22 (1608)
RB303	1-239-621-11	s	NETWORK RESISTOR 22 (1608)
RB304	1-239-412-11	s	NETWORK, RESISTOR 100 (1608)
RB305	1-239-412-11	s	NETWORK, RESISTOR 100 (1608)
RB306	1-239-412-11	s	NETWORK, RESISTOR 100 (1608)
RB307	1-239-412-11	s	NETWORK, RESISTOR 100 (1608)
RB308	1-239-412-11	s	NETWORK, RESISTOR 100 (1608)
RB309	1-239-309-11	s	RESISTOR ARRAY,CHIP 100K
RB310	1-239-309-11	s	RESISTOR ARRAY,CHIP 100K

http://getMANUAL.com

(SDI-62 BOARD (DSBK-1801))

Ref. No. or Q'ty	Part No.	SP	Description
RB401	1-239-412-11	s	NETWORK, RESISTOR 100 (1608)
RB402	1-239-412-11	s	NETWORK, RESISTOR 100 (1608)
RB403	1-239-412-11	s	NETWORK, RESISTOR 100 (1608)
RB601	1-239-621-11	s	NETWORK RESISTOR 22 (1608)
RB602	1-239-621-11	s	NETWORK RESISTOR 22 (1608)
RB603	1-239-621-11	s	NETWORK RESISTOR 22 (1608)
RB604	1-239-621-11	s	NETWORK RESISTOR 22 (1608)
RB701	1-239-389-11	s	RESISTOR,NETWORK 47K (1608)
RB702	1-236-904-11	s	RESISTOR NETWORK 1K (1608)
RB703	1-239-412-11	s	NETWORK, RESISTOR 100 (1608)
RV101	1-225-789-21	s	RES, ADJ, CERMET 2K
RV401	1-225-789-21	s	RES, ADJ, CERMET 2K
X701	1-579-988-11	s	VIBRATOR, CERAMIC

SDI-62A BOARD (DSBK-1601)

Ref. No. or Q'ty	Part No.	SP	Description
2pcs	7-685-646-79	s	SCREW +BVTP 3X8(EP-FE/ZNBK/CM2
2pcs	7-682-903-01	s	SCREW +PWH 3X5(EP-FE/ZN/CM2)
C301	1-107-826-11	s	CAPACITOR,CHIP CERAMIC 0.1MF
C302	1-104-608-11	s	CAPACITOR, ELECT 33MF/6.3V
C303	1-126-393-11	s	CAPACITOR ELECT 33MF/10V(CHIP)
C304	1-126-393-11	s	CAPACITOR ELECT 33MF/10V(CHIP)
C305	1-107-826-11	s	CAPACITOR,CHIP CERAMIC 0.1MF
C306	1-104-608-11	s	CAPACITOR, ELECT 33MF/6.3V
C307	1-107-826-11	s	CAPACITOR,CHIP CERAMIC 0.1MF
C308	1-107-826-11	s	CAPACITOR,CHIP CERAMIC 0.1MF
C309	1-107-826-11	s	CAPACITOR,CHIP CERAMIC 0.1MF
C310	1-107-826-11	s	CAPACITOR,CHIP CERAMIC 0.1MF
C311	1-107-826-11	s	CAPACITOR,CHIP CERAMIC 0.1MF
C312	1-115-416-11	s	CAPACITOR,CERAMIC 1000PF/25V
C313	1-107-826-11	s	CAPACITOR,CHIP CERAMIC 0.1MF
C314	1-107-826-11	s	CAPACITOR,CHIP CERAMIC 0.1MF
C315	1-107-826-11	s	CAPACITOR,CHIP CERAMIC 0.1MF
C316	1-107-826-11	s	CAPACITOR,CHIP CERAMIC 0.1MF
C317	1-107-826-11	s	CAPACITOR,CHIP CERAMIC 0.1MF
C318	1-107-826-11	s	CAPACITOR,CHIP CERAMIC 0.1MF
C319	1-107-826-11	s	CAPACITOR,CHIP CERAMIC 0.1MF
C320	1-107-826-11	s	CAPACITOR,CHIP CERAMIC 0.1MF
C321	1-107-826-11	s	CAPACITOR,CHIP CERAMIC 0.1MF
C322	1-107-826-11	s	CAPACITOR,CHIP CERAMIC 0.1MF
C323	1-107-826-11	s	CAPACITOR,CHIP CERAMIC 0.1MF
C324	1-107-826-11	s	CAPACITOR,CHIP CERAMIC 0.1MF
C326	1-107-826-11	s	CAPACITOR,CHIP CERAMIC 0.1MF
C401	1-107-826-11	s	CAPACITOR,CHIP CERAMIC 0.1MF
C402	1-107-826-11	s	CAPACITOR,CHIP CERAMIC 0.1MF
C404	1-104-851-11	s	CAPACITOR,TANTALUM 10MF/10V
C405	1-104-851-11	s	CAPACITOR,TANTALUM 10MF/10V
C406	1-107-826-11	s	CAPACITOR,CHIP CERAMIC 0.1MF
C407	1-107-826-11	s	CAPACITOR,CHIP CERAMIC 0.1MF
C409	1-107-826-11	s	CAPACITOR,CHIP CERAMIC 0.1MF
C410	1-107-826-11	s	CAPACITOR,CHIP CERAMIC 0.1MF
C412	1-107-826-11	s	CAPACITOR,CHIP CERAMIC 0.1MF
C413	1-107-826-11	s	CAPACITOR,CHIP CERAMIC 0.1MF
C414	1-107-826-11	s	CAPACITOR,CHIP CERAMIC 0.1MF
C416	1-104-851-11	s	CAPACITOR,TANTALUM 10MF/10V
C417	1-107-826-11	s	CAPACITOR,CHIP CERAMIC 0.1MF
C418	1-107-826-11	s	CAPACITOR,CHIP CERAMIC 0.1MF
C419	1-107-826-11	s	CAPACITOR,CHIP CERAMIC 0.1MF
C420	1-162-915-11	s	CAPACITOR,CERAMIC 10PF/50V CH
C421	1-107-826-11	s	CAPACITOR,CHIP CERAMIC 0.1MF
C422	1-107-826-11	s	CAPACITOR,CHIP CERAMIC 0.1MF
C423	1-107-826-11	s	CAPACITOR,CHIP CERAMIC 0.1MF
C424	1-104-851-11	s	CAPACITOR,TANTALUM 10MF/10V
C425	1-107-826-11	s	CAPACITOR,CHIP CERAMIC 0.1MF
C426	1-107-826-11	s	CAPACITOR,CHIP CERAMIC 0.1MF
C427	1-107-826-11	s	CAPACITOR,CHIP CERAMIC 0.1MF
C428	1-162-911-11	s	CAPACITOR,CERAMIC 6PF/50V 1608
C429	1-107-826-11	s	CAPACITOR,CHIP CERAMIC 0.1MF
C430	1-107-826-11	s	CAPACITOR,CHIP CERAMIC 0.1MF
C431	1-107-826-11	s	CAPACITOR,CHIP CERAMIC 0.1MF
C432	1-107-826-11	s	CAPACITOR,CHIP CERAMIC 0.1MF
C433	1-107-826-11	s	CAPACITOR,CHIP CERAMIC 0.1MF
C434	1-107-826-11	s	CAPACITOR,CHIP CERAMIC 0.1MF
C435	1-107-826-11	s	CAPACITOR,CHIP CERAMIC 0.1MF

(SDI-62A BOARD (DSBK-1601))

Ref. No. or Q'ty	Part No.	SP	Description
C436	1-126-393-11	s	CAPACITOR ELECT 33MF/10V(CHIP)
C437	1-162-907-11	s	CAPACITOR,CERAMIC 2PF/50V(CK)
C438	1-162-907-11	s	CAPACITOR,CERAMIC 2PF/50V(CK)
C501	1-162-908-11	s	CAPACITOR,CERAMIC 3PF/50V 1608
C502	1-162-908-11	s	CAPACITOR,CERAMIC 3PF/50V 1608
C507	1-162-925-11	s	CAPACITOR,CERAMIC 68PF/50V CH
C508	1-162-925-11	s	CAPACITOR,CERAMIC 68PF/50V CH
C509	1-109-982-11	s	CAPACITOR,CHIP CERAMIC 1MF/10V
C510	1-109-982-11	s	CAPACITOR,CHIP CERAMIC 1MF/10V
C513	1-126-393-11	s	CAPACITOR ELECT 33MF/10V(CHIP)
C514	1-107-826-11	s	CAPACITOR,CHIP CERAMIC 0.1MF
C515	1-109-982-11	s	CAPACITOR,CHIP CERAMIC 1MF/10V
C516	1-107-826-11	s	CAPACITOR,CHIP CERAMIC 0.1MF
C517	1-109-982-11	s	CAPACITOR,CHIP CERAMIC 1MF/10V
C518	1-107-826-11	s	CAPACITOR,CHIP CERAMIC 0.1MF
C602	1-107-826-11	s	CAPACITOR,CHIP CERAMIC 0.1MF
C603	1-107-826-11	s	CAPACITOR,CHIP CERAMIC 0.1MF
C604	1-107-826-11	s	CAPACITOR,CHIP CERAMIC 0.1MF
C605	1-107-826-11	s	CAPACITOR,CHIP CERAMIC 0.1MF
C606	1-107-826-11	s	CAPACITOR,CHIP CERAMIC 0.1MF
C607	1-107-826-11	s	CAPACITOR,CHIP CERAMIC 0.1MF
C701	1-164-315-11	s	CAPACITOR,CERAMIC 470PF/50V CH
C702	1-107-826-11	s	CAPACITOR,CHIP CERAMIC 0.1MF
C703	1-162-915-11	s	CAPACITOR,CERAMIC 10PF/50V CH
C704	1-162-915-11	s	CAPACITOR,CERAMIC 10PF/50V CH
C705	1-104-608-11	s	CAPACITOR, ELECT 33MF/6.3V
C706	1-107-826-11	s	CAPACITOR,CHIP CERAMIC 0.1MF
C707	1-107-826-11	s	CAPACITOR,CHIP CERAMIC 0.1MF
C708	1-107-826-11	s	CAPACITOR,CHIP CERAMIC 0.1MF
C709	1-107-826-11	s	CAPACITOR,CHIP CERAMIC 0.1MF
C710	1-107-826-11	s	CAPACITOR,CHIP CERAMIC 0.1MF
C711	1-107-826-11	s	CAPACITOR,CHIP CERAMIC 0.1MF
C712	1-107-826-11	s	CAPACITOR,CHIP CERAMIC 0.1MF
C714	1-107-826-11	s	CAPACITOR,CHIP CERAMIC 0.1MF
C715	1-107-826-11	s	CAPACITOR,CHIP CERAMIC 0.1MF
C716	1-107-826-11	s	CAPACITOR,CHIP CERAMIC 0.1MF
C717	1-107-826-11	s	CAPACITOR,CHIP CERAMIC 0.1MF
CN102	1-794-815-11	s	CONNECTOR, COAXIAL (BNC TYPE)
CN103	1-794-873-11	o	CONNECTOR, BNC 2P
D1	8-719-024-81	s	DIODE 1SS300-TE85L
D301	8-719-941-23	s	DIODE DA204U
D401	8-719-071-10	s	DIODE CL-191HR-CD-T
FB401	1-543-644-11	s	BEAD, FERRITE (CHIP)
FB402	1-543-644-11	s	BEAD, FERRITE (CHIP)
FB403	1-543-644-11	s	BEAD, FERRITE (CHIP)
FB404	1-543-644-11	s	BEAD, FERRITE (CHIP)
FB405	1-543-644-11	s	BEAD, FERRITE (CHIP)
FL502	1-239-896-12	s	FILTER, EMI (SMD)
FL503	1-239-896-12	s	FILTER, EMI (SMD)
IC217	8-759-656-54	s	IC TC7WH14FK(TE85R)
IC301	8-759-259-77	s	IC PQ20VZ5U
IC302	8-759-182-84	s	IC PQ05SZ5U
IC303	8-759-196-93	s	IC TC7SH00FU-TE85R
IC304	8-759-490-42	s	IC TC74VHCT574AFT(EL)
IC305	8-759-490-42	s	IC TC74VHCT574AFT(EL)
IC306	8-759-490-41	s	IC TC74VHCT541AFT(EL)
IC307	8-759-524-18	s	IC TC74VHC163FT(EL)

(SDI-62A BOARD (DSBK-1601))

Ref. No. or Q'ty	Part No.	SP	Description
IC308	8-759-519-12	s	IC CXD8281Q
IC309	8-759-172-73	s	IC CXD8385Q
IC310	8-759-523-84	s	IC TC74VHC14FT (EL)
IC311	8-759-523-94	s	IC TC74VHC32FT(EL)
IC312	8-759-344-84	s	IC CXD8953Q
IC401	8-759-524-32	s	IC TC74VHC367FT(EL)
IC402	8-759-524-32	s	IC TC74VHC367FT(EL)
IC403	8-752-078-32	s	IC CXB1341R
IC503	8-759-177-02	s	IC NJM2267M
IC602	8-759-524-50	s	IC TC74VHC541FT(EL)
IC603	8-759-590-19	s	IC CXD9068BR
IC604	8-759-447-77	s	IC TC7WH74FU (TR12R)
IC605	8-759-524-24	o	IC TC7WT241FU(TE12R)
IC701	8-759-490-41	s	IC TC74VHCT541AFT(EL)
IC702	8-759-524-24	o	IC TC7WT241FU(TE12R)
IC704	8-759-578-68	s	IC SN74LVCC4245APWR
IC705	8-759-491-54	s	IC TC74VHCT573AFT(EL)
IC706	8-759-524-07	s	IC TC74VHC138FT(EL)
IC707	8-759-524-07	s	IC TC74VHC138FT(EL)
IC708	8-759-524-50	s	IC TC74VHC541FT(EL)
IC710	8-759-524-28	s	IC TC74VHC245FT(EL)
IC711	8-759-490-41	s	IC TC74VHCT541AFT(EL)
IC712	8-759-523-92	s	IC TC74VHC21FT(EL)
IC713	8-759-566-06	s	IC TC7WH08FU(TE12R)
L301	1-424-643-11	s	COIL, CHOKE 10UH
L302	1-424-643-11	s	COIL, CHOKE 10UH
L505	1-410-377-31	s	INDUCTOR,CHIP 4.7UH (3225)
L506	1-410-377-31	s	INDUCTOR,CHIP 4.7UH (3225)
L701	1-410-377-31	s	INDUCTOR,CHIP 4.7UH (3225)
Q301	8-729-029-14	s	TRANSISTOR DTC144EUA-T106
Q302	8-729-029-14	s	TRANSISTOR DTC144EUA-T106
Q401	8-729-028-91	s	TRANSISTOR DTA144EUA-T106
Q402	8-729-028-91	s	TRANSISTOR DTA144EUA-T106
Q403	8-729-029-14	s	TRANSISTOR DTC144EUA-T106
Q404	8-729-105-68	s	TRANSISTOR 2SC3356-K
Q405	8-729-105-68	s	TRANSISTOR 2SC3356-K
Q406	8-729-105-68	s	TRANSISTOR 2SC3356-K
Q407	8-729-105-68	s	TRANSISTOR 2SC3356-K
Q701	8-729-029-14	s	TRANSISTOR DTC144EUA-T106
Q702	8-729-029-14	s	TRANSISTOR DTC144EUA-T106
R218	1-216-864-11	s	RESISTOR,CHIP 0 1/16W (1608)
R301	1-218-851-11	s	RESISTOR,CHIP 1.5K 1/16W(1608)
R302	1-218-846-11	s	RESISTOR,CHIP 910 1/16W (1608)
R303	1-216-801-11	s	RESISTOR,CHIP 22 1/16W (1608)
R304	1-216-805-11	s	RESISTOR,CHIP 47 1/16W 1608
R305	1-216-864-11	s	RESISTOR,CHIP 0 1/16W (1608)
R306	1-216-809-11	s	RESISTOR,CHIP 100 1/16W 1608
R307	1-216-851-11	s	RESISTOR,CHIP 330K 1/16W 1608
R309	1-216-809-11	s	RESISTOR,CHIP 100 1/16W 1608
R310	1-216-809-11	s	RESISTOR,CHIP 100 1/16W 1608
R311	1-216-833-11	s	RESISTOR,CHIP 10K 1/16W (1608)
R313	1-216-833-11	s	RESISTOR,CHIP 10K 1/16W (1608)
R314	1-216-821-11	s	RESISTOR,CHIP 1.0K 1/16W(1608)
R315	1-216-821-11	s	RESISTOR,CHIP 1.0K 1/16W(1608)
R401	1-218-875-11	s	RESISTOR,CHIP 15K 1/16W (1608)
R402	1-218-875-11	s	RESISTOR,CHIP 15K 1/16W (1608)
R403	1-216-864-11	s	RESISTOR,CHIP 0 1/16W (1608)
R404	1-216-805-11	s	RESISTOR,CHIP 47 1/16W 1608

(SDI-62A BOARD (DSBK-1601))

Ref. No. or Q'ty	Part No.	SP	Description
R405	1-218-855-11	s	RESISTOR,CHIP 2.2K 1/16W(1608)
R406	1-216-821-11	s	RESISTOR,CHIP 1.0K 1/16W(1608)
R407	1-216-821-11	s	RESISTOR,CHIP 1.0K 1/16W(1608)
R408	1-218-845-11	s	RESISTOR,CHIP 820 1/16W (1608)
R410	1-218-873-11	s	RESISTOR,CHIP 12K 1/16W (1608)
R412	1-218-855-11	s	RESISTOR,CHIP 2.2K 1/16W(1608)
R413	1-216-821-11	s	RESISTOR,CHIP 1.0K 1/16W(1608)
R414	1-218-855-11	s	RESISTOR,CHIP 2.2K 1/16W(1608)
R415	1-216-817-11	s	RESISTOR,CHIP 470 1/16W 1608
R416	1-218-831-11	s	RESISTOR, CHIP 220 1/16W(1608)
R417	1-216-829-11	s	RESISTOR,CHIP 4.7K 1/16W(1608)
R418	1-216-817-11	s	RESISTOR,CHIP 470 1/16W 1608
R420	1-218-833-11	s	RESISTOR,CHIP 270 1/16W (1608)
R421	1-218-833-11	s	RESISTOR,CHIP 270 1/16W (1608)
R422	1-211-985-11	s	RESISTOR,CHIP 47 1/16W (1608)
R423	1-211-989-11	s	RESISTOR,CHIP 68 1/16W (1608)
R424	1-211-978-11	s	RESISTOR,CHIP 24 1/16W (1608)
R425	1-211-984-11	s	RESISTOR,CHIP 43 1/16W (1608)
R426	1-218-829-11	s	RESISTOR,CHIP 180 1/16W (1608)
R427	1-211-989-11	s	RESISTOR,CHIP 68 1/16W (1608)
R428	1-211-978-11	s	RESISTOR,CHIP 24 1/16W (1608)
R429	1-218-839-11	s	RESISTOR,CHIP 470 1/16W (1608)
R430	1-211-985-11	s	RESISTOR,CHIP 47 1/16W (1608)
R431	1-211-985-11	s	RESISTOR,CHIP 47 1/16W (1608)
R432	1-211-985-11	s	RESISTOR,CHIP 47 1/16W (1608)
R433	1-218-827-11	s	RESISTOR,CHIP 150 1/16W (1608)
R434	1-218-827-11	s	RESISTOR,CHIP 150 1/16W (1608)
R435	1-218-847-11	s	RESISTOR, CHIP 1K 1/16W (1608)
R436	1-218-847-11	s	RESISTOR, CHIP 1K 1/16W (1608)
R437	1-211-989-11	s	RESISTOR,CHIP 68 1/16W (1608)
R438	1-211-989-11	s	RESISTOR,CHIP 68 1/16W (1608)
R501	1-218-848-11	s	RESISTOR,CHIP 1.1K 1/16W(1608)
R502	1-218-848-11	s	RESISTOR,CHIP 1.1K 1/16W(1608)
R507	1-218-845-11	s	RESISTOR,CHIP 820 1/16W (1608)
R508	1-218-845-11	s	RESISTOR,CHIP 820 1/16W (1608)
R517	1-218-838-11	s	RESISTOR,CHIP 430 1/16W (1608)
R518	1-218-838-11	s	RESISTOR,CHIP 430 1/16W (1608)
R523	1-218-847-11	s	RESISTOR, CHIP 1K 1/16W (1608)
R524	1-218-847-11	s	RESISTOR, CHIP 1K 1/16W (1608)
R525	1-211-990-11	s	RESISTOR,CHIP 75 1/16W (1608)
R526	1-211-990-11	s	RESISTOR,CHIP 75 1/16W (1608)
R601	1-216-801-11	s	RESISTOR,CHIP 22 1/16W (1608)
R701	1-216-845-11	s	RESISTOR,CHIP 100K 1/16W(1608)
R704	1-216-845-11	s	RESISTOR,CHIP 100K 1/16W(1608)
R705	1-216-833-11	s	RESISTOR,CHIP 10K 1/16W (1608)
R707	1-216-833-11	s	RESISTOR,CHIP 10K 1/16W (1608)
R709	1-216-833-11	s	RESISTOR,CHIP 10K 1/16W (1608)
R710	1-216-821-11	s	RESISTOR,CHIP 1.0K 1/16W(1608)
R713	1-216-833-11	s	RESISTOR,CHIP 10K 1/16W (1608)
R714	1-216-833-11	s	RESISTOR,CHIP 10K 1/16W (1608)
R715	1-216-833-11	s	RESISTOR,CHIP 10K 1/16W (1608)
R716	1-216-833-11	s	RESISTOR,CHIP 10K 1/16W (1608)
RB301	1-239-621-11	s	NETWORK RESISTOR 22 (1608)
RB302	1-239-621-11	s	NETWORK RESISTOR 22 (1608)
RB303	1-239-621-11	s	NETWORK RESISTOR 22 (1608)
RB304	1-239-412-11	s	NETWORK, RESISTOR 100 (1608)
RB305	1-239-412-11	s	NETWORK, RESISTOR 100 (1608)
RB306	1-239-412-11	s	NETWORK, RESISTOR 100 (1608)

(SDI-62A BOARD (DSBK-1601))

Ref. No. or Q'ty	Part No.	SP	Description
RB307	1-239-412-11	s	NETWORK, RESISTOR 100 (1608)
RB308	1-239-412-11	s	NETWORK, RESISTOR 100 (1608)
RB309	1-239-309-11	s	RESISTOR ARRAY,CHIP 100K
RB310	1-239-309-11	s	RESISTOR ARRAY,CHIP 100K
RB401	1-239-412-11	s	NETWORK, RESISTOR 100 (1608)
RB402	1-239-412-11	s	NETWORK, RESISTOR 100 (1608)
RB403	1-239-412-11	s	NETWORK, RESISTOR 100 (1608)
RB601	1-239-621-11	s	NETWORK RESISTOR 22 (1608)
RB602	1-239-621-11	s	NETWORK RESISTOR 22 (1608)
RB701	1-239-389-11	s	RESISTOR,NETWORK 47K (1608)
RB702	1-236-904-11	s	RESISTOR NETWORK 1K (1608)
RB703	1-239-412-11	s	NETWORK, RESISTOR 100 (1608)
RV401	1-225-789-21	s	RES, ADJ, CERMET 2K
X701	1-579-988-11	s	VIBRATOR, CERAMIC

FRAME(DSR-1600/1600P)

Ref. No. or Q'ty	Part No.	SP	Description
1pc	⚠ 1-468-549-11	s	REGULATOR, SWITCHING
HN001	1-757-295-11	o	WIRE, FLAT TYPE (30 CORE)
(FROM CN108/MB-920 BOARD TO CN108/KY-484 BOARD)			
HN002	1-757-297-11	o	WIRE, FLAT TYPE (20 CORE)
(FROM CN2/KY-484 BOARD TO CN2/DY-16 BOARD)			
HN003	1-960-766-11	o	HARNESS, SUB (MB-HP2)
(FROM CN109/MB-920 BOARD TO CN109/HP-108 BOARD)			
2pcs	1-569-621-11	o	HOUSING, CONNECTOR 12P
24pcs	1-766-387-11	o	TERMINAL, SOLDERLESS 1P
HN004	1-960-769-11	o	HARNESS, SUB (DC-POWER1)
(FROM CN1/MB-920 BOARD TO CN202/SW-REG)			
2pcs	1-563-888-11	s	HOUSING, CONNECTOR 10P
20pcs	1-562-210-11	s	CONTACT, CONNECTOR
HN005	1-960-770-11	o	HARNESS, SUB (DC-POWER2)
(FROM CN2/MB-920 BOARD TO CN108/SW-REG)			
2pcs	1-562-285-11	o	HOUSING,CONNECTOR 4P
8pcs	1-562-210-11	s	CONTACT, CONNECTOR
HN006	1-960-768-11	o	HARNESS, SUB (JOG-KY)
(FROM CN1/KY-484 BOARD TO CN1/PTC-100 BOARD)			
HN007	1-960-772-11	o	HARNESS (WITH INLET)
(FROM CN1/AC-212 BOARD TO AC INLET)			
1pc	1-540-051-12	s	INLET, AC
1pc	1-562-211-11	o	HOUSING, CONNECTOR 3P
2pcs	1-562-210-11	s	CONTACT, CONNECTOR
1pc	1-537-568-11	o	TERMINAL, GROUND
HN008	1-960-771-11	o	HARNESS (WITH ACSW)
(FROM CN101/SW-REG TO CN2/AC-212 BOARD)			
1pc	1-562-211-11	o	HOUSING, CONNECTOR 3P
2pcs	1-562-210-11	s	CONTACT, CONNECTOR
1pc	7-623-508-01	s	LUG, 3
1pc	1-762-953-11	s	SWITCH, POWER
1pc	1-794-319-11	o	HOUSING, CONNECTOR 7P
2pcs	1-562-210-11	s	CONTACT, CONNECTOR
HN101	1-791-714-11	o	CABLE, FLEXIBLE FLAT (15CORE)
(FROM CN4/DR-428 BOARD TO CN4/SE-521 BOARD)			
HN102	1-791-714-11	o	CABLE, FLEXIBLE FLAT (15CORE)
(FROM CN3/DR-428 BOARD TO CN3/SE-522 BOARD)			
HN103	1-757-296-11	o	WIRE, FLAT TYPE (18 CORE)
(FROM CN1/DR-428 BOARD TO CN1/CC-83 BOARD)			
HN104	1-757-298-11	o	CABLE, FLEXIBLE FLAT (45 CORE)
(FROM CN302/MB-920 BOARD TO CN302/DR-428 BOARD)			
HN105	1-757-299-11	o	CABLE, FLEXIBLE FLAT (45 CORE)
(FROM CN3/RP-120 BOARD TO CN303/DR-428 BOARD)			
HN106	1-757-300-11	o	CABLE, FLEXIBLE FLAT (45 CORE)
(FROM CN200/MB-920 BOARD TO CN200/RP-120 BOARD)			
HN107	1-757-300-11	o	CABLE, FLEXIBLE FLAT (45 CORE)
(FROM CN201/MB-920 BOARD TO CN201/RP-120 BOARD)			
HN108	1-960-767-11	o	HARNESS, SUB (DR-MB3)
(FROM CN301/MB-920 BARD TO CN301/DR-428 BOARD)			
2pcs	1-695-891-11	o	HOUSING,CONNECTOR 10P
20pcs	1-695-215-11	o	TERMINAL, SOLDERLESS 1P

(FRAME(DSR-1600/1600P))

Ref. No. or Q'ty	Part No.	SP	Description
HN109	- - -		HARNESS, SUB (CAS)
(FROM CN3/CC-83 BOARD TO MOTOR)			
2pcs	1-695-215-11	o	TERMINAL,SOLDERLESS
1pc	1-764-192-11	o	HOUSING, CONNECTOR 2P
M1	X-360-566-12	s	MOTOR ASSY "MOTOR"
M2	8-835-619-51	s	MOTOR, DC SCD16A/J-RP "CAPSTAN MOTOR"
M3	A-8279-204-A	s	MOTOR ASSY, RS "REEL SHIFT MOTOR"
1pc	- - -		HARNESS, SUB (RS)
M4	8-835-636-51	s	MOTOR, DC SRD14A/J-N "T-REEL MOTOR"
M5	A-8323-775-A	s	DEH-16A-R "DRUM ASSEMBLY"
M6	8-835-637-51	s	MOTOR, DC SRD15A/J-N "S-REEL MOTOR"
M7	A-8279-202-A	s	MOTOR ASSY, LD "LOADING MOTOR"
1pc	- - -		HARNESS, SUB (LD)
M101	1-763-423-11	s	MOTOR, FAN "FAN MOTOR"
PM1	1-454-931-12	s	SOLENOID, PLUNGER "PINCH SOL"
PM2	1-454-932-11	s	SOLENOID, PLUNGER "M-STOP SOL"
PM3	1-454-930-11	s	SOLENOID, PLUNGER "R-BRAKE SOL"
PM4	1-454-942-11	s	SOLENOID, PLUNGER "HC SOL"
S1	1-762-551-11	s	SWITCH, PUSH
SE1	8-719-988-19	s	PHTO REFLECTOR PR-11-C-T "CASSECOM SENSOR'S"
SE2	8-719-988-19	s	PHTO REFLECTOR PR-11-C-T "CASSECOM SENSOR'S"
SE3	8-719-988-19	s	PHTO REFLECTOR PR-11-C-T "CASSECOM SENSOR'S"
SE4	8-719-988-19	s	PHOTO REFLECTOR PR-11-C-T "LOADING SENSOR'S"
SE5	8-719-988-19	s	PHOTO REFLECTOR PR-11-C-T "LOADING SENSOR'S"
SE6	8-719-988-19	s	PHOTO REFLECTOR PR-11-C-T "LOADING SENSOR'S"
SE7	8-729-921-53	s	PHOTO TRANSISTOR PT483F1 "END SENSOR"
SE8	8-729-921-53	s	PHOTO TRANSISTOR PT483F1 "TOP SENSOR"
SE9	8-719-939-11	s	PHOTO INTERRUPTER GP2S09-B "REEL POSITION SENSOR'S"
SE10	8-719-988-19	s	PTOTO REFLECTOR PR-11-C-T "REEL POSITION SENSOR'S"
SE11	8-719-939-11	s	PHOTO INTERRUPTER GP2S09-B "REEL POSITION SENSOR'S"
SE12	8-719-939-11	s	PHOTO INTERRUPTER GP2S09-B "REEL POSITION SENSOR'S"
SE13	1-801-596-21	s	THERMISTOR "THERMO SENSOR"
SE14	1-572-288-21	s	SWITCH, PUSH "CASSETTE SIZE SENSOR'S"
SE15	1-572-288-21	s	SWITCH, PUSH "CASSETTE SIZE SENSOR'S"
SE16	1-572-288-21	s	SWITCH, PUSH "CASSETTE SIZE SENSOR'S"
SE17	1-803-490-11	s	SENSOR, DEW CONDENSATION "DEW SENSOR"

(FRAME(DSR-1600/1600P))

Ref. No. or Q'ty	Part No.	SP	Description
SE18	8-719-988-19	s	PHOTO REFLECTOR PR-11-C-T "CASSETTE IN SENSOR'S"
SE19	8-719-988-19	s	PHOTO REFLECTOR PR-11-C-T "CASSETTE IN SENSOR'S"
SE20	8-719-988-19	s	PHOTO REFLECTOR PR-11-C-T "CASSETTE IN SENSOR'S"
SE21	8-719-988-19	s	PHOTO REFLECTOR PR-11-C-T "CASSETTE IN SENSOR'S"
SE22	A-8323-659-A	s	HOLDER SUB ASSY, MIC "MIC SENSOR"

FRAME(DSR-1800/1800P)

Ref. No. or Q'ty	Part No.	SP	Description
1pc	⚠ 1-468-549-11	s	REGULATOR, SWITCHING
HN001	1-757-295-11	o	WIRE, FLAT TYPE (30 CORE) (FROM CN108/MB-920 BOARD TO CN108/KY-484 BOARD)
HN002	1-757-297-11	o	WIRE, FLAT TYPE (20 CORE) (FROM CN2/KY-484 BOARD TO CN2/DY-16 BOARD)
HN003	1-960-766-11	o	HARNESS, SUB (MB-HP2) (FROM CN109/MB-920 BOARD TO CN109/HP-108 BOARD)
2pcs	1-569-621-11	o	HOUSING, CONNECTOR 12P
24pcs	1-766-387-11	o	TERMINAL, SOLDERLESS 1P
HN004	1-960-769-11	o	HARNESS, SUB (DC-POWER1) (FROM CN1/MB-920 BOARD TO CN202/SW-REG)
2pcs	1-563-888-11	s	HOUSING, CONNECTOR 10P
20pcs	1-562-210-11	s	CONTACT, CONNECTOR
HN005	1-960-770-11	o	HARNESS, SUB (DC-POWER2) (FROM CN2/MB-920 BOARD TO CN108/SW-REG)
2pcs	1-562-285-11	o	HOUSING,CONNECTOR 4P
8pcs	1-562-210-11	s	CONTACT, CONNECTOR
HN006	1-960-768-11	o	HARNESS, SUB (JOG-KY) (FROM CN1/KY-484 BOARD TO CN1/PTC-100 BOARD)
HN007	1-960-772-11	o	HARNESS (WITH INLET) (FROM CN1/AC-212 BOARD TO AC INLET)
1pc	1-540-051-12	s	INLET, AC
1pc	1-562-211-11	o	HOUSING, CONNECTOR 3P
2pcs	1-562-210-11	s	CONTACT, CONNECTOR
1pc	1-537-568-11	o	TERMINAL, GROUND
HN008	1-960-771-11	o	HARNESS (WITH ACSW) (FROM CN101/SW-REG TO CN2/AC-212 BOARD)
1pc	1-562-211-11	o	HOUSING, CONNECTOR 3P
2pcs	1-562-210-11	s	CONTACT, CONNECTOR
1pc	7-623-508-01	s	LUG, 3
1pc	1-762-953-11	s	SWITCH, POWER
1pc	1-794-319-11	o	HOUSING, CONNECTOR 7P
2pcs	1-562-210-11	s	CONTACT, CONNECTOR
HN101	1-791-714-11	o	CABLE, FLEXIBLE FLAT (15CORE) (FROM CN4/DR-428 BOARD TO CN4/SE-521 BOARD)
HN102	1-791-714-11	o	CABLE, FLEXIBLE FLAT (15CORE) (FROM CN3/DR-428 BOARD TO CN3/SE-522 BOARD)
HN103	1-757-296-11	o	WIRE, FLAT TYPE (18 CORE) (FROM CN1/DR-428 BOARD TO CN1/CC-83 BOARD)
HN104	1-757-298-11	o	CABLE, FLEXIBLE FLAT (45 CORE) (FROM CN302/MB-920 BOARD TO CN302/DR-428 BOARD)
HN105	1-757-299-11	o	CABLE, FLEXIBLE FLAT (45 CORE) (FROM CN3/RP-120 BOARD TO CN303/DR-428 BOARD)
HN106	1-757-300-11	o	CABLE, FLEXIBLE FLAT (45 CORE) (FROM CN200/MB-920 BOARD TO CN200/RP-120 BOARD)
HN107	1-757-300-11	o	CABLE, FLEXIBLE FLAT (45 CORE) (FROM CN201/MB-920 BOARD TO CN201/RP-120 BOARD)
HN108	1-757-300-11	o	CABLE, FLEXIBLE FLAT (45 CORE) (FROM CN202/MB-920 BOARD TO CN202/RP-120 BOARD)
HN109	1-960-767-11	o	HARNESS, SUB (DR-MB3) (FROM CN301/MB-920 BARD TO CN301/DR-428 BOARD)
2pcs	1-695-891-11	o	HOUSING,CONNECTOR 10P
20pcs	1-695-215-11	o	TERMINAL, SOLDERLESS 1P

(FRAME(DSR-1800/1800P))

Ref. No. or Q'ty	Part No.	SP	Description
HN110	- - -		HARNESS, SUB (CAS)
(FROM CN3/CC-83 BOARD TO MOTOR)			
2pcs	1-695-215-11	o	TERMINAL,SOLDERLESS
1pc	1-764-192-11	o	HOUSING, CONNECTOR 2P
M1	X-360-566-12	s	MOTOR ASSY "MOTOR"
M2	8-835-619-51	s	MOTOR, DC SCD16A/J-RP "CAPSTAN MOTOR"
M3	A-8279-204-A	s	MOTOR ASSY, RS "REEL SHIFT MOTOR"
1pc	- - -		HARNESS, SUB (RS)
M4	8-835-636-51	s	MOTOR, DC SRD14A/J-N "T-REEL MOTOR"
M5	A-8323-775-A	s	DEH-16A-R "DRUM ASSEMBLY"
M6	8-835-637-51	s	MOTOR, DC SRD15A/J-N "S-REEL MOTOR"
M7	A-8279-202-A	s	MOTOR ASSY, LD "LOADING MOTOR"
1pc	- - -		HARNESS, SUB (LD)
M101	1-763-423-11	s	MOTOR, FAN "FAN MOTOR"
PM1	1-454-931-12	s	SOLENOID, PLUNGER "PINCH SOL"
PM2	1-454-932-11	s	SOLENOID, PLUNGER "M-STOP SOL"
PM3	1-454-930-11	s	SOLENOID, PLUNGER "R-BRAKE SOL"
PM4	1-454-942-11	s	SOLENOID, PLUNGER "HC SOL"
S1	1-762-551-11	s	SWITCH, PUSH
SE1	8-719-988-19	s	PHTO REFLECTOR PR-11-C-T "CASSECOM SENSOR'S"
SE2	8-719-988-19	s	PHTO REFLECTOR PR-11-C-T "CASSECOM SENSOR'S"
SE3	8-719-988-19	s	PHTO REFLECTOR PR-11-C-T "CASSECOM SENSOR'S"
SE4	8-719-988-19	s	PHOTO REFLECTOR PR-11-C-T "LOADING SENSOR'S"
SE5	8-719-988-19	s	PHOTO REFLECTOR PR-11-C-T "LOADING SENSOR'S"
SE6	8-719-988-19	s	PHOTO REFLECTOR PR-11-C-T "LOADING SENSOR'S"
SE7	8-729-921-53	s	PHOTO TRANSISTOR PT483F1 "END SENSOR"
SE8	8-729-921-53	s	PHOTO TRANSISTOR PT483F1 "TOP SENSOR"
SE9	8-719-939-11	s	PHOTO INTERRUPTER GP2S09-B "REEL POSITION SENSOR'S"
SE10	8-719-988-19	s	PTOTO REFLECTOR PR-11-C-T "REEL POSITION SENSOR'S"
SE11	8-719-939-11	s	PHOTO INTERRUPTER GP2S09-B "REEL POSITION SENSOR'S"
SE12	8-719-939-11	s	PHOTO INTERRUPTER GP2S09-B "REEL POSITION SENSOR'S"
SE13	1-801-596-21	s	THERMISTOR "THERMO SENSOR"
SE14	1-572-288-21	s	SWITCH, PUSH "CASSETTE SIZE SENSOR'S"
SE15	1-572-288-21	s	SWITCH, PUSH "CASSETTE SIZE SENSOR'S"
SE16	1-572-288-21	s	SWITCH, PUSH "CASSETTE SIZE SENSOR'S"
SE17	1-803-490-11	s	SENSOR, DEW CONDENSATION "DEW SENSOR"
SE18	8-719-988-19	s	PHOTO REFLECTOR PR-11-C-T "CASSETTE IN SENSOR'S"

(FRAME(DSR-1800/1800P))

Ref. No. or Q'ty	Part No.	SP	Description
SE19	8-719-988-19	s	PHOTO REFLECTOR PR-11-C-T "CASSETTE IN SENSOR'S"
SE20	8-719-988-19	s	PHOTO REFLECTOR PR-11-C-T "CASSETTE IN SENSOR'S"
SE21	8-719-988-19	s	PHOTO REFLECTOR PR-11-C-T "CASSETTE IN SENSOR'S"
SE22	A-8323-659-A	s	HOLDER SUB ASSY, MIC "MIC SENSOR"

12-4. Packing Materials and Accessories

```
------------------------------------------------------------
PACKING MATERIALS & SUPPLIED ACCESSORIES(DSR-1800/P/1600/P)
------------------------------------------------------------
 Ref. No.
 or Q'ty  Part No.    SP Description

 1pc    ⚠ 1-551-812-11 s CORD,POWER
                                  [for UC model]
 1pc    ⚠ 1-791-047-11 s CORD SET,POWER
                                   [for J model]
 1pc    ⚠ 1-782-929-11 s CORD,POWER (BS 3P)
                                  [for CE model]
 1pc      3-704-355-01 o SHEET (STADARD), PROTECTION


---------------------------------------
PACKING MATERIALS & SUPPLIED ACCESSORIES
(DSBK-1601/1602/1801/1802/1803)
---------------------------------------
 Ref. No.
 or Q'ty  Part No.    SP Description

 1pc      3-704-046-91 s BAG,PREVENTION,ELECT.   (POLY)
                                    [for DSBK-1601/1801]
 4pcs     7-682-903-01 s SCREW +PWH 3X5(EP-FE/ZN/CM2)
                                    [for DSBK-1601/1801]
 3pcs     7-682-903-01 s SCREW +PWH 3X5(EP-FE/ZN/CM2)
                                 [for DSBK-1602/1802/1803]
```

12-5. Optional Fixtures

```
Part No.    SP Description

J-6080-029-A s MIRROR (SMALL ROUND TYPE 12MM)
J-6082-231-A o TOOL, WASHER BRACKET (1.5)
J-6082-232-A o TOOL, WASHER BRACKET (1.2)
J-6082-233-A o TOOL, WASHER BRACKET (0.8)
J-6082-234-A o TOOL, WASHER REMOVER (A)

J-6082-236-A o REMOVABLE SET, WASHER
J-6082-362-A s TAPE GUIDE DRIVER 2
J-6082-373-A o DV TORQUE CASSETTE
J-6325-110-A o BIT FOR TORQUE DRIVER (M1.4)
J-6325-380-A o BIT FOR TORQUE DRIVER (M2)

J-6325-400-A o TORQUE DRIVER (3KG)
J-6443-710-A o BRAKE TORQUE GAUGE (CCW) 200G-CM
J-6443-720-A o BRAKE TORQUE GAUGE (CW) 200G-CM
J-6444-610-B o PATH ADJUSTMENT BOARD, DJ-461
J-6444-720-A o CONNECTION CABLE, DJ-472

J-6444-970-A o SYS/SERVO DOWNLOAD BOARD, DJ-497
J-6444-980-A o EXTENSION BOARD, DJ-498
J-6444-990-A o FPGA DOWNLOAD BOARD, DJ-499
3-184-527-01 s CLOTH, CLEANING (145MMX145MM)
7-432-114-11 s THREE BOND-1401B

7-662-001-39 o GREASE, SG-941 (20G)
8-967-999-02 o TAPE, ALIGNMENT XH2-1AST (N&P)
8-967-999-22 o TAPE, ALIGNMENT XH5-1A2 (NTSC)
8-967-999-26 o TAPE, ALIGNMENT XH5-1AP2 (PAL)
8-967-999-31 o TAPE, ALIGNMENT XH4-1A (NTSC)

9-919-573-01 s HEAD CLEANING LIQUID
```

Section 13
Block Diagrams

Index

Board Name	Circuit Configuration	Page
Overall	System/servo/digital process	13-2
AC-212	Line filter	–
CC-83	Cassette compartment mode detection/intermediate board	13-5
CC-84	Cassette compartment cassette type detection	13-5
CC-85	Cassette compartment cassette in detection	13-5
CN-1863	Sensor input/output board	–
CN-2021	Intermediate board between CC-84 and CC-85	–
CN-2022	Intermediate board between CC-83 and CC-84	–
DPR-175	Digital process	13-6
DR-428	Servo/mechanism control	13-11
DV-26	i.LINK/DV input/output board (Option: DSBK-1803)	13-15
DY-16	Fluorescent display board/audio meter	–
FU-78P	Digital process (PB)	13-16
FU-78R	Digital process (REC)	13-17
HP-108	Headphone interface	–
IF-820	Analog video/audio input・output process	13-2
KY-484/484A	Operation panel	13-19
MB-920	Mother board	–
MB-927	Mother board	–
PRE-45	RF PB, ATF detection	13-20
PTC-100	Search dial sensor	–
RP-120	RF REC/PB, ATF detection	13-22
SDI-61	SDTI (QSDI) input/output board (Option: DSBK-1802)	13-27
SDI-61A	SDTI (QSDI) output board (Option: DSBK-1602)	13-27
SDI-62	SDI, AES/EBU input/output board (Option: DSBK-1801)	13-28
SDI-62A	SDI, AES/EBU output board (Option: DSBK-1601)	13-28
SE-521	Mode sensor/tape end sensor/loading motor FG sensor	13-5
SE-522	Tape top sensor/reel position sensor (Mini/M/Standard)	13-5
SE-525	LED signal board	–
SE-538	Tension sensor	13-5
SSP-23	System/servo/analog audio input・output process	13-30
SSP-24/24A	System/servo/digital process	13-35
VPR-71	Analog video input・output process/reference	13-39

Overall (1/2) DSR-1600/1600P

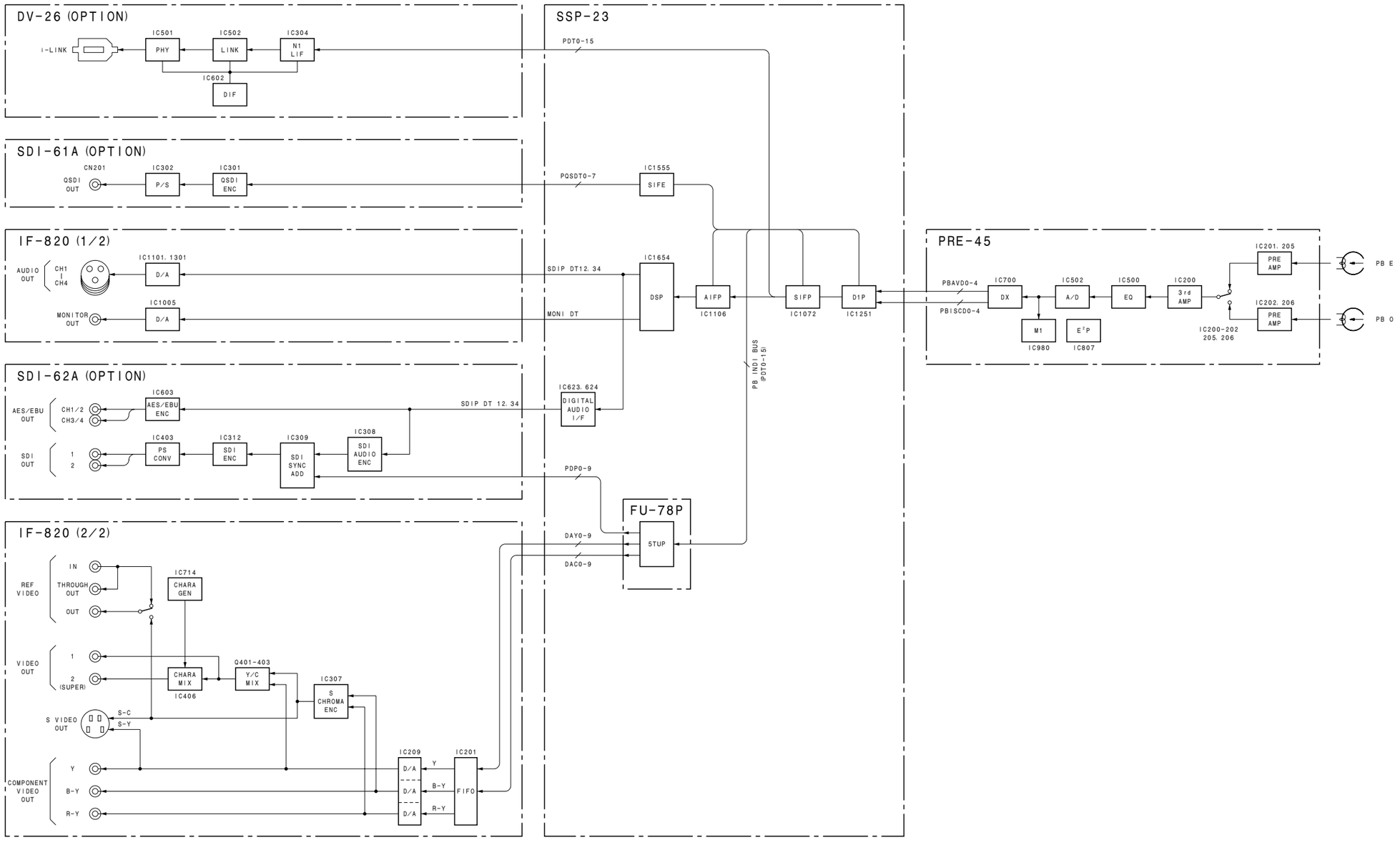

Digital process

Overall (1/2)

LOT NO. 064-
For DSR-1600/1600P

http://getMANUAL.com

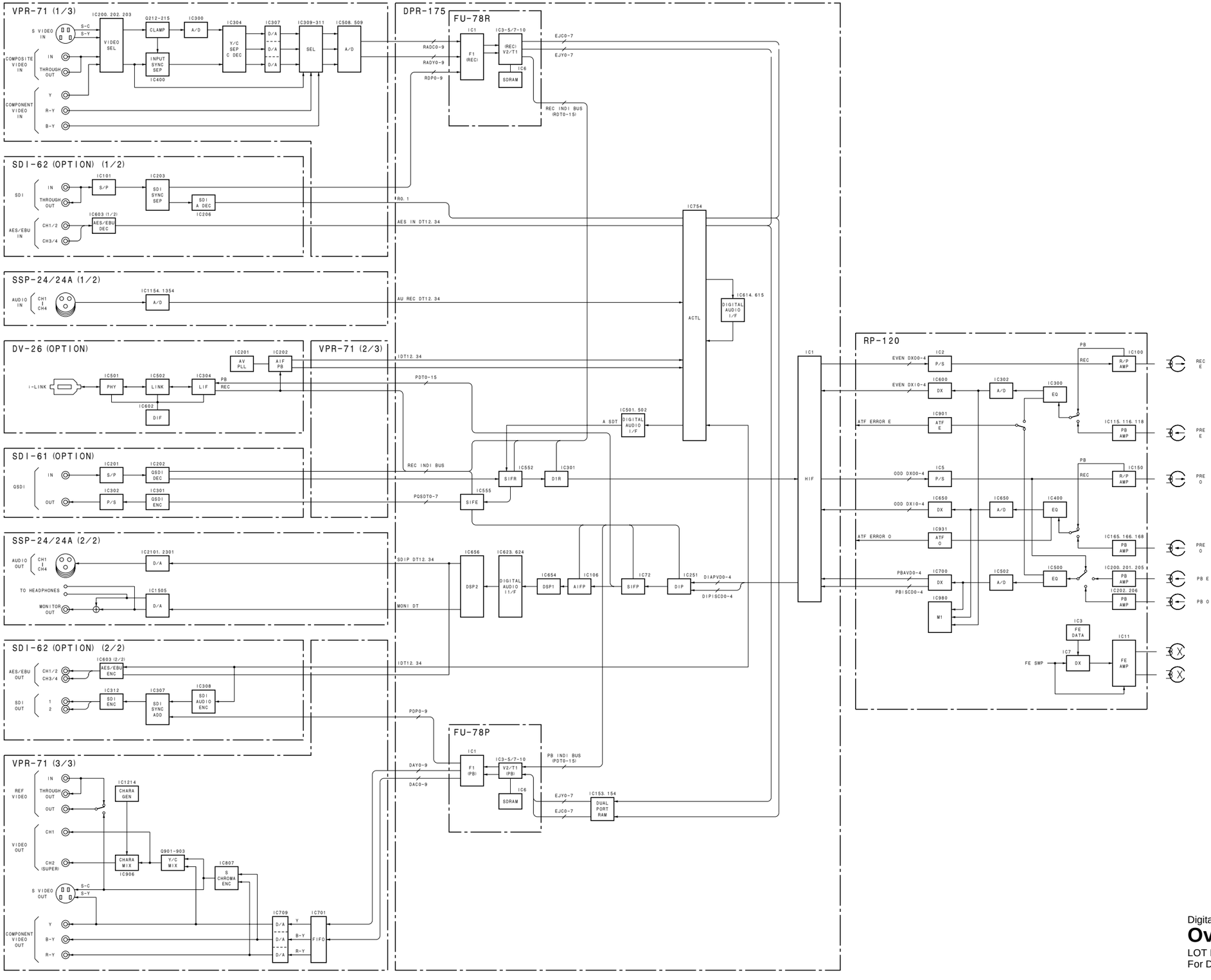

Digital process

Overall (1/2)

LOT NO. 064-
For DSR-1800/1800P

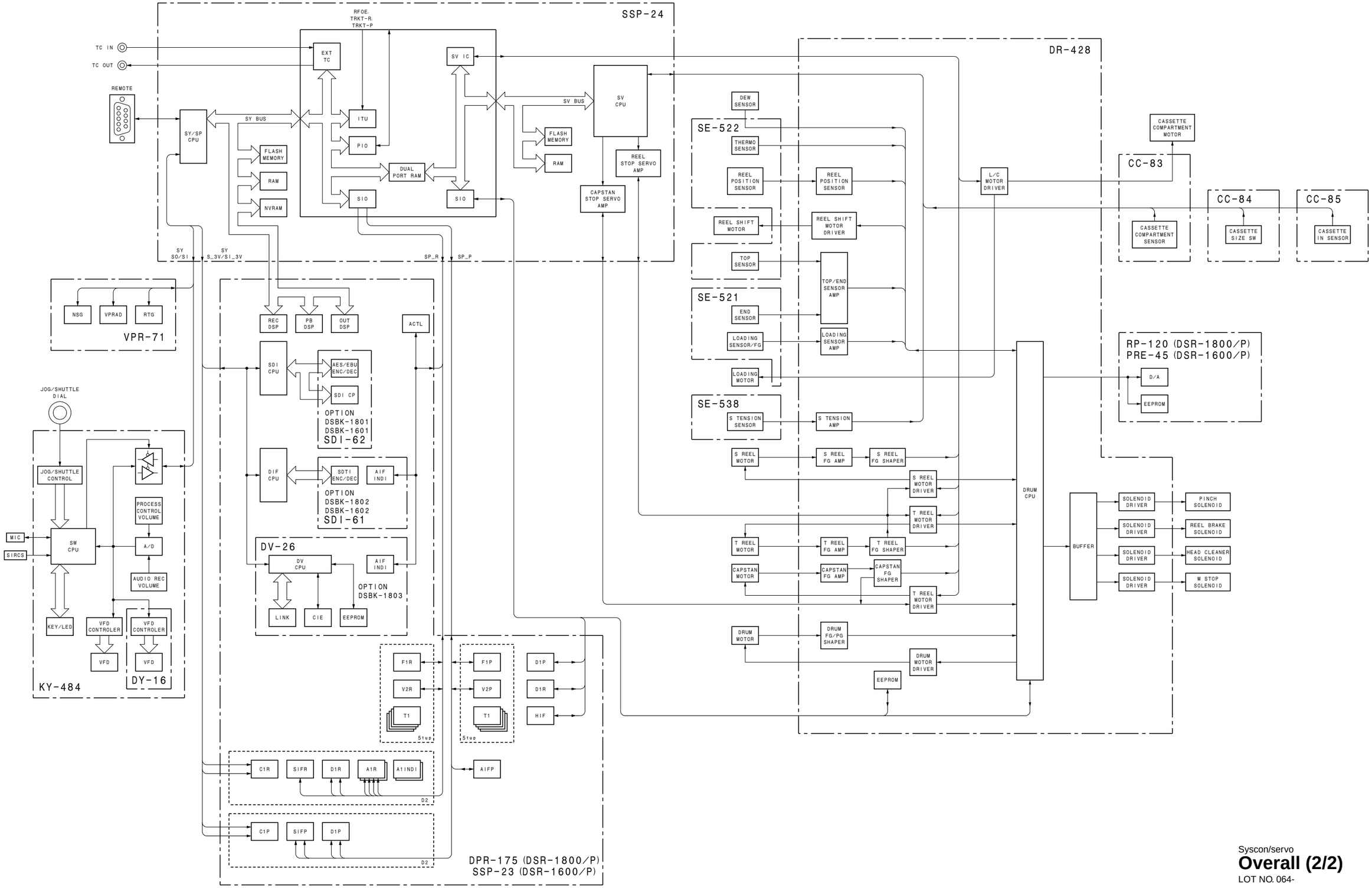

Syscon/servo

Overall (2/2)

LOT NO. 064-

DPR-175 (1/3)

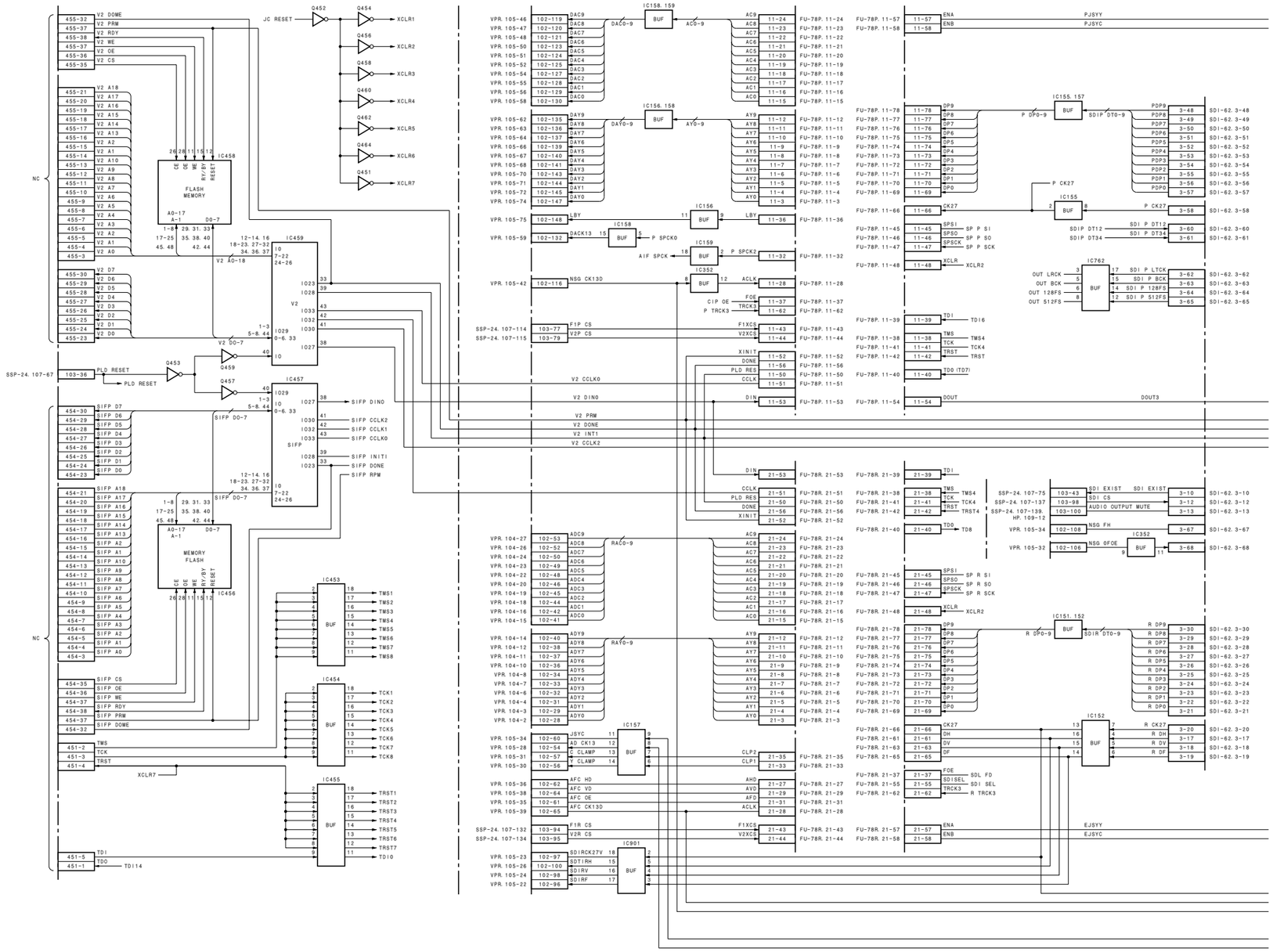

13-6

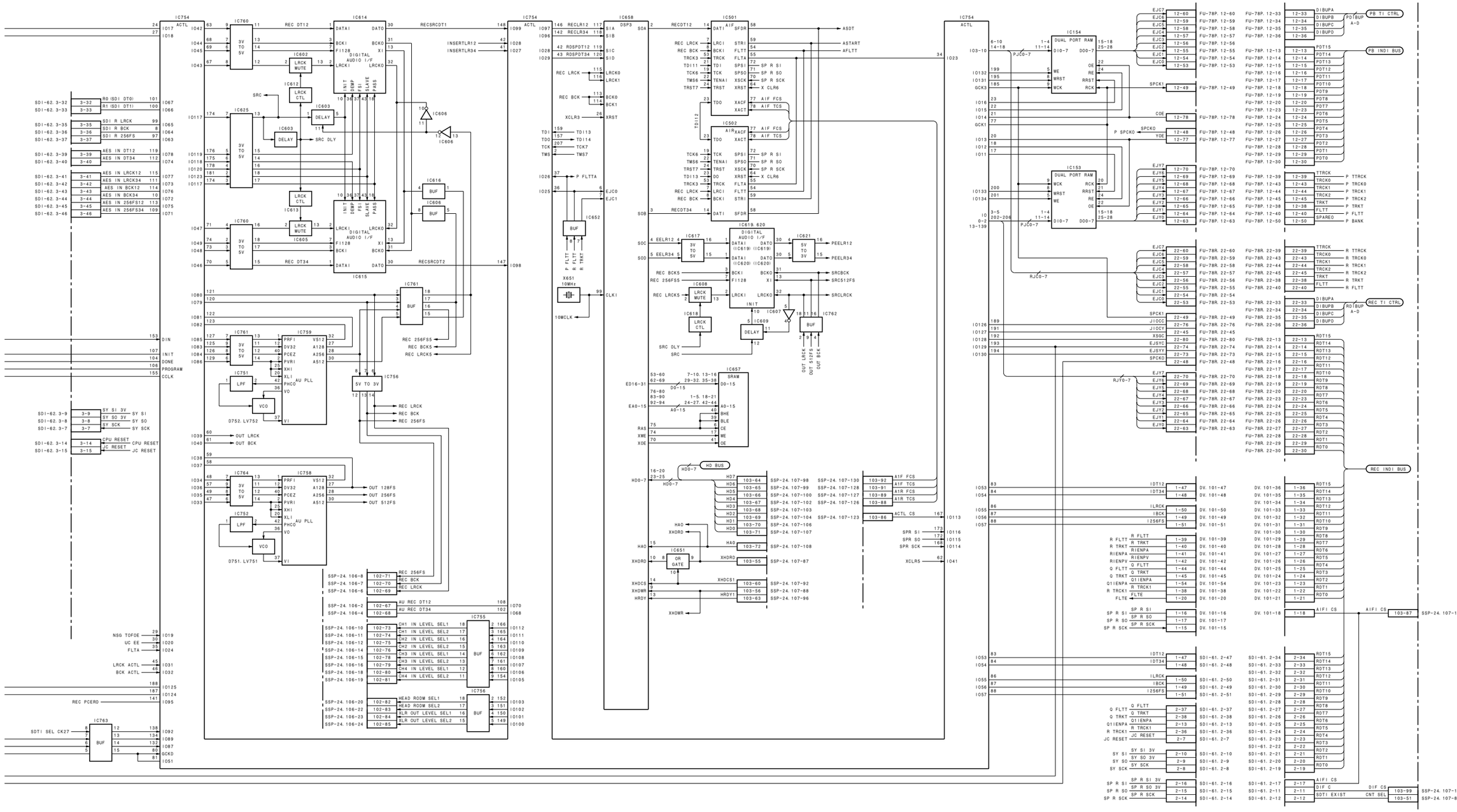
IC754
ACTL
IC760
IC614
IC602
IC612
IC603
IC625
IC613
IC605
IC615
IC616
IC606
IC761
IC759
IC751
IC756
IC764
IC758
IC752
IC763
IC658
DSP3
IC501
IC502
IC619, 620
DIGITAL AUDIO I/F
IC617
IC621
IC608
IC618
IC609
IC607
IC762
IC657
SRAM
IC651
OR GATE
HD BUS
IC154
DUAL PORT RAM
IC153
IC755
IC756
REC 256FS5
REC BCK5
REC LRCK5
SRCBCK
SRCS12FS
SRCLRCK
OUT LRCK
OUT BCK
OUT 128FS
OUT 256FS
OUT 512FS
ASDT
ASTART
AFLTT
P FLTTA
TD113
TD114
TCK7
TMS7
X651
10MHz
10MCLK
PEELR12
PEELR34
REC LRCK
REC BCK
REC 256FS
AU PLL
D752. LV752
D751. LV751
PB TI CTRL
PB INDI BUS
REC TI CTRL
REC INDI BUS
P TTRCK
P TRCK0
P TRCK1
P TRCK2
P TRKT
P FLTT
P BANK
R TTRCK
R TRCK0
R TRCK1
R TRCK2
R TRKT
R FLTT
AIFI CS
DIF C
DIF CS
SDTI EXIST
CNT SEL

DPR-175 (2/3)

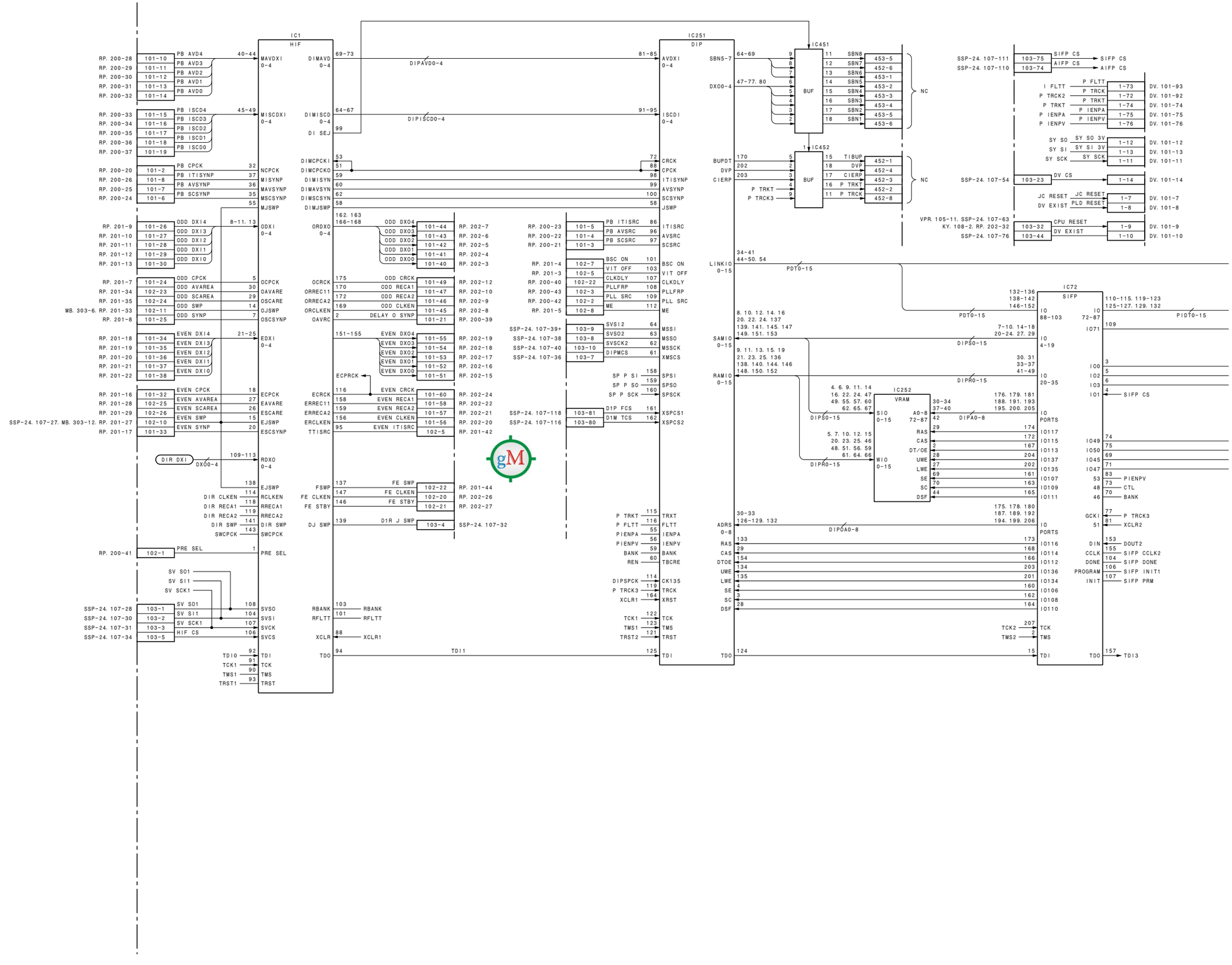

13-8

DPR-175 (2/3)

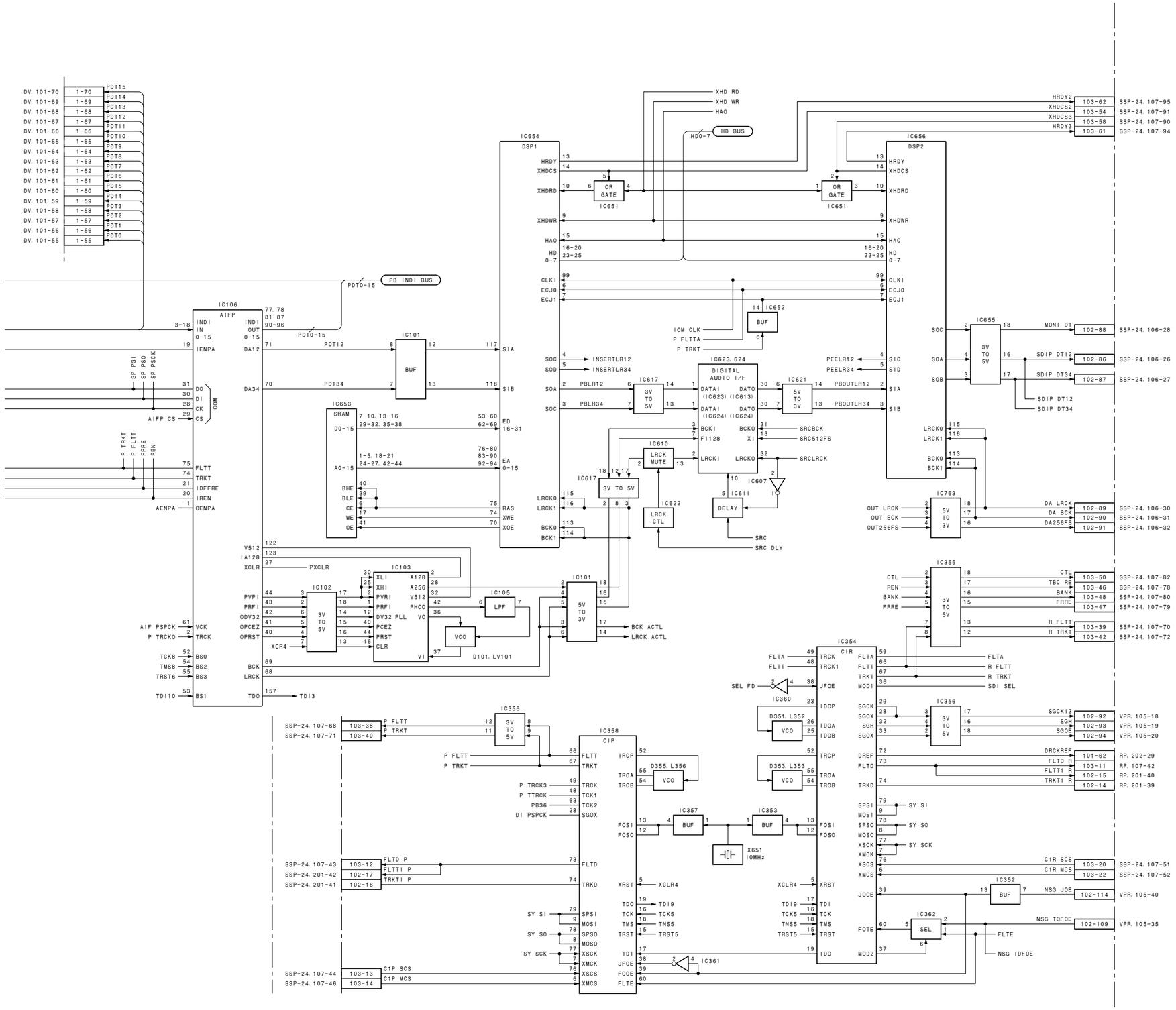

Digital process
DPR-175 (2/3)
LOT NO. 064-

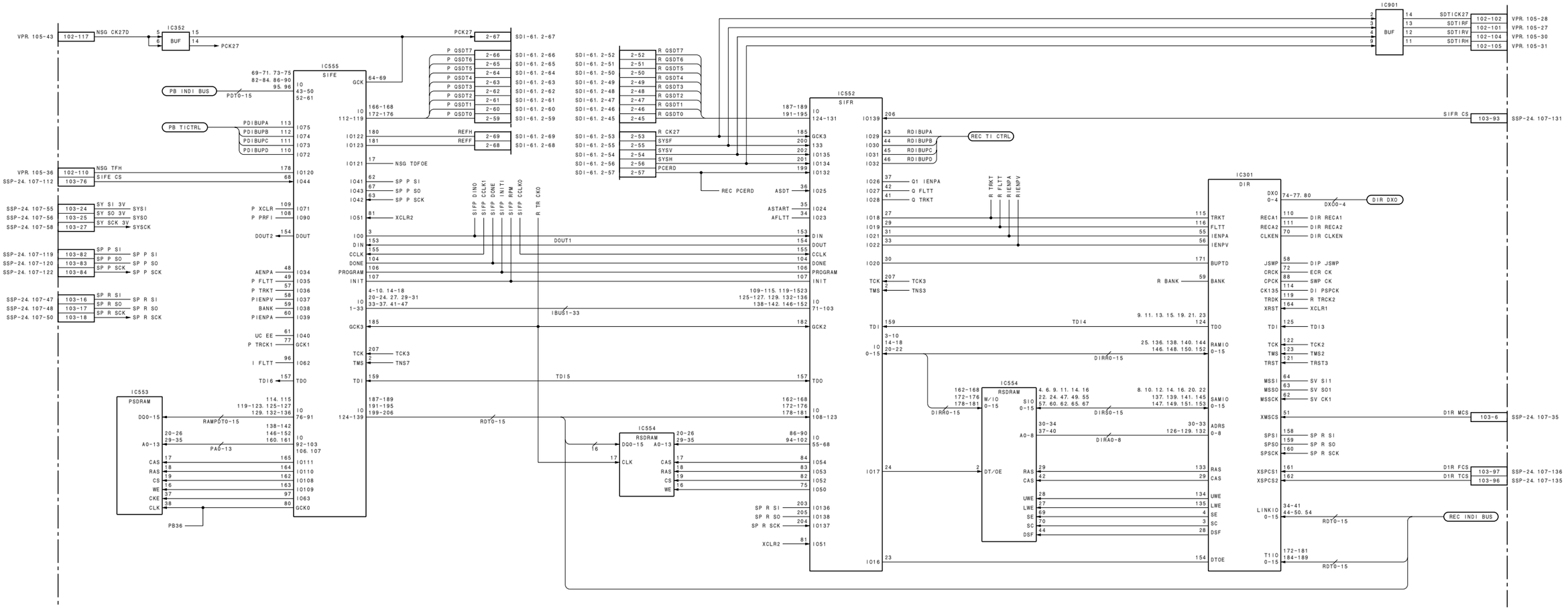
IC352
BUF
NSG CK27D
PCK27
IC555
SIFE
PB INDI BUS
PB TICTRL
NSG TFH
SIFE CS
SY SI 3V
SY SO 3V
SY SCK 3V
SP P SI
SP P SO
SP P SCK
SP R SI
SP R SO
SP R SCK
P XCLR
P PRFI
DOUT2
AENPA
P FLTT
P TRKT
PIENPV
BANK
PIENPA
UC EE
P TRCK1
I FLTT
TDI6
NSG TDFOE
SP P SI
SP P SO
SP P SCK
XCLR2
SIFP DINO
SIFP CCLK1
SIFP DONE
SIFP INIT1
SIFP RPM
SIFP CCLKO
R TR CKO
DOUT1
IBUS1-33
TCK3
TNS7
TDI5
RAMPDTO-15
PA0-13
PB36
RDTO-15
IC553
PSDRAM
IC554
RSDRAM
IC552
SIFR
P QSDT7
P QSDT6
P QSDT5
P QSDT4
P QSDT3
P QSDT2
P QSDT1
P QSDT0
R QSDT7
R QSDT6
R QSDT5
R QSDT4
R QSDT3
R QSDT2
R QSDT1
R QSDT0
R CK27
SYSF
SYSV
SYSH
PCERD
REC PCERD
ASDT
ASTART
AFLTT
GCK3
GCK2
TCK3
TNS3
TDI4
DIRR0-15
DIRA0-15
DIRS0-15
DIRA0-8
DT/OE
R TRKT
R FLTT
R IENPA
R IENPV
R BANK
IC901
BUF
SDTICK27
SDTIRF
SDTIRV
SDTIRH
VPR. 105-28
VPR. 105-27
VPR. 105-30
VPR. 105-31
SIFR CS
SSP-24. 107-131
REC TI CTRL
IC301
DIR
DXO 0-4
DXOO-4
DIR DXO
DIR RECA1
DIR RECA2
DIR CLKEN
DIP JSWP
ECR CK
SWP CK
DI PSPCK
R TRCK2
XCLR1
TDI3
TCK2
TMS2
TRST3
SV SI1
SV SO1
SV CK1
D1R MCS
D1R FCS
D1R TCS
SP R SI
SP R SO
SP R SCK
REC INDI BUS
SSP-24. 107-35
SSP-24. 107-136
SSP-24. 107-135

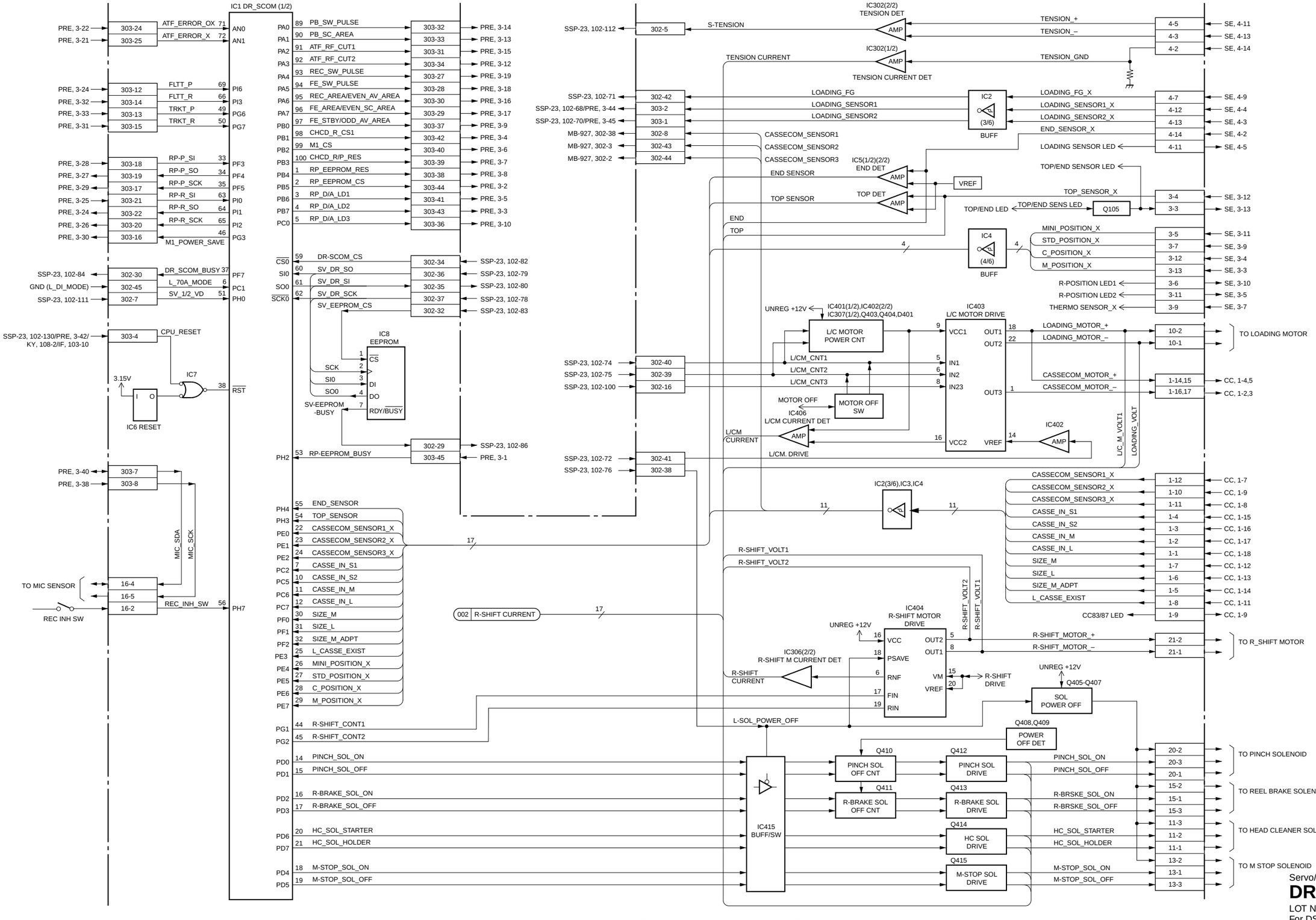

Servo/mechanism control

DR-428 (1/2)

LOT NO. 064-
For DSR-1600/1600P

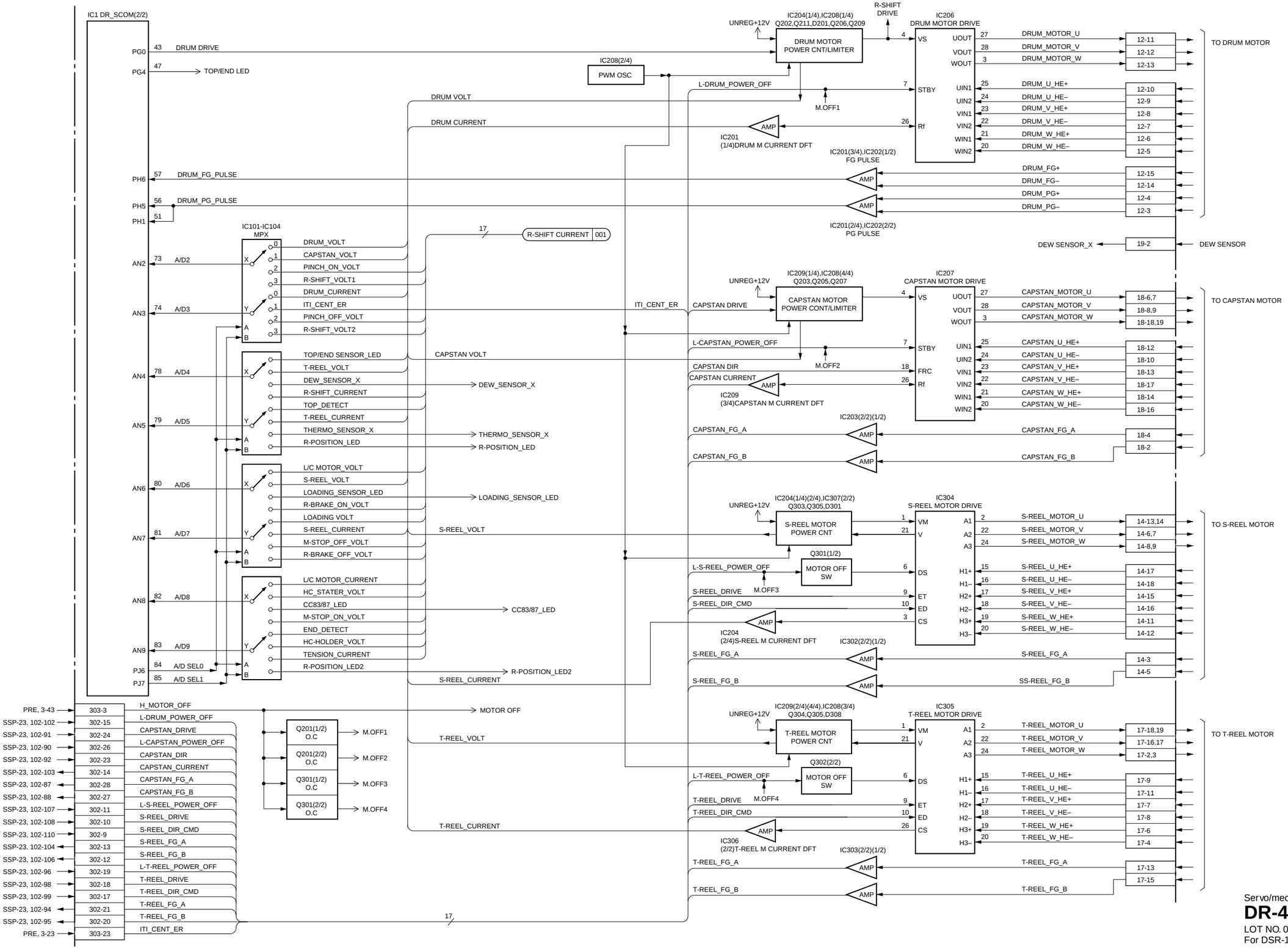

Servo/mechanism control

DR-428 (2/2)

LOT NO. 064-
For DSR-1600/1600P

http://getMANUAL.com

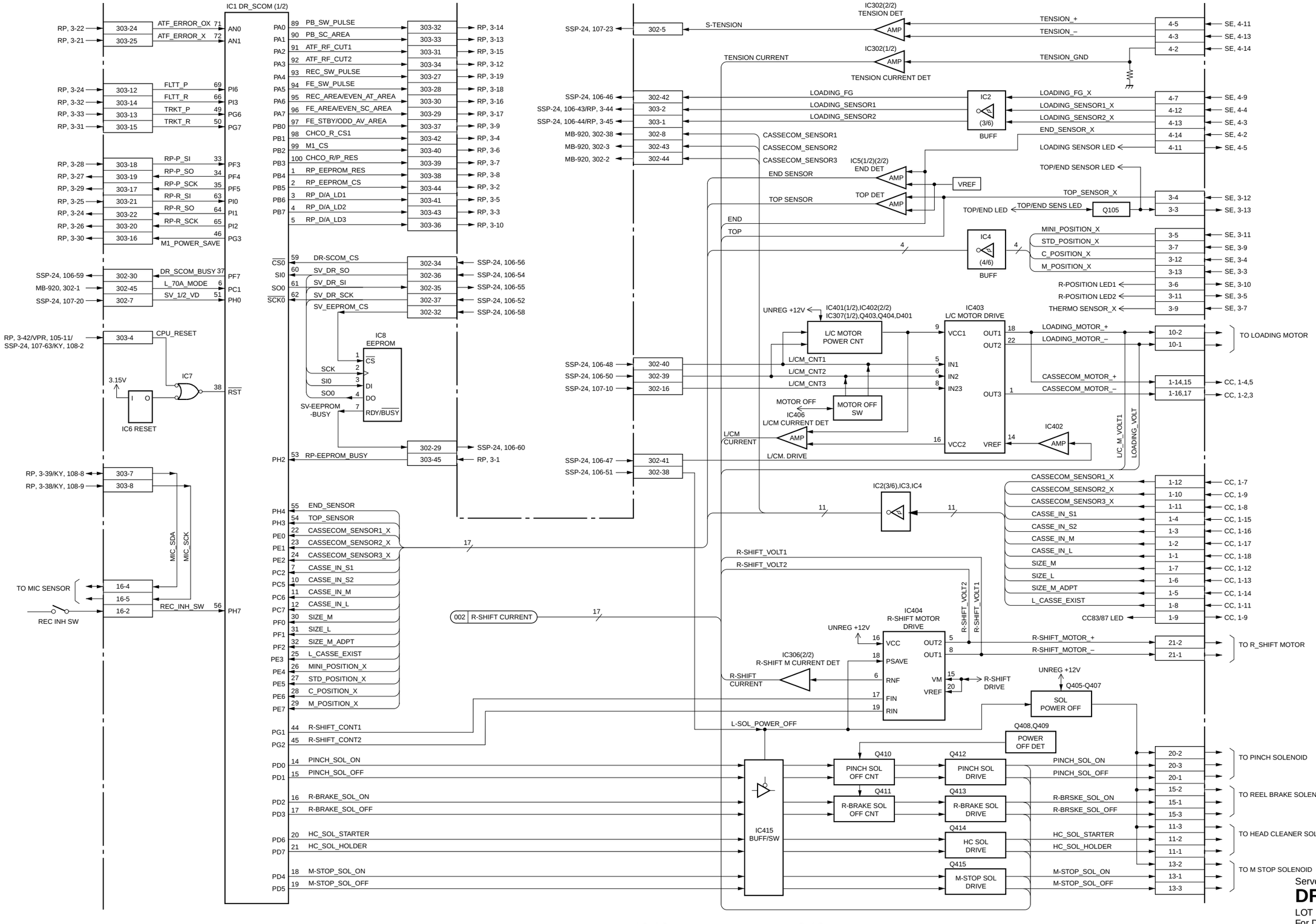

Servo/mechanism control

DR-428 (1/2)

LOT NO. 064-
For DSR-1800/1800P

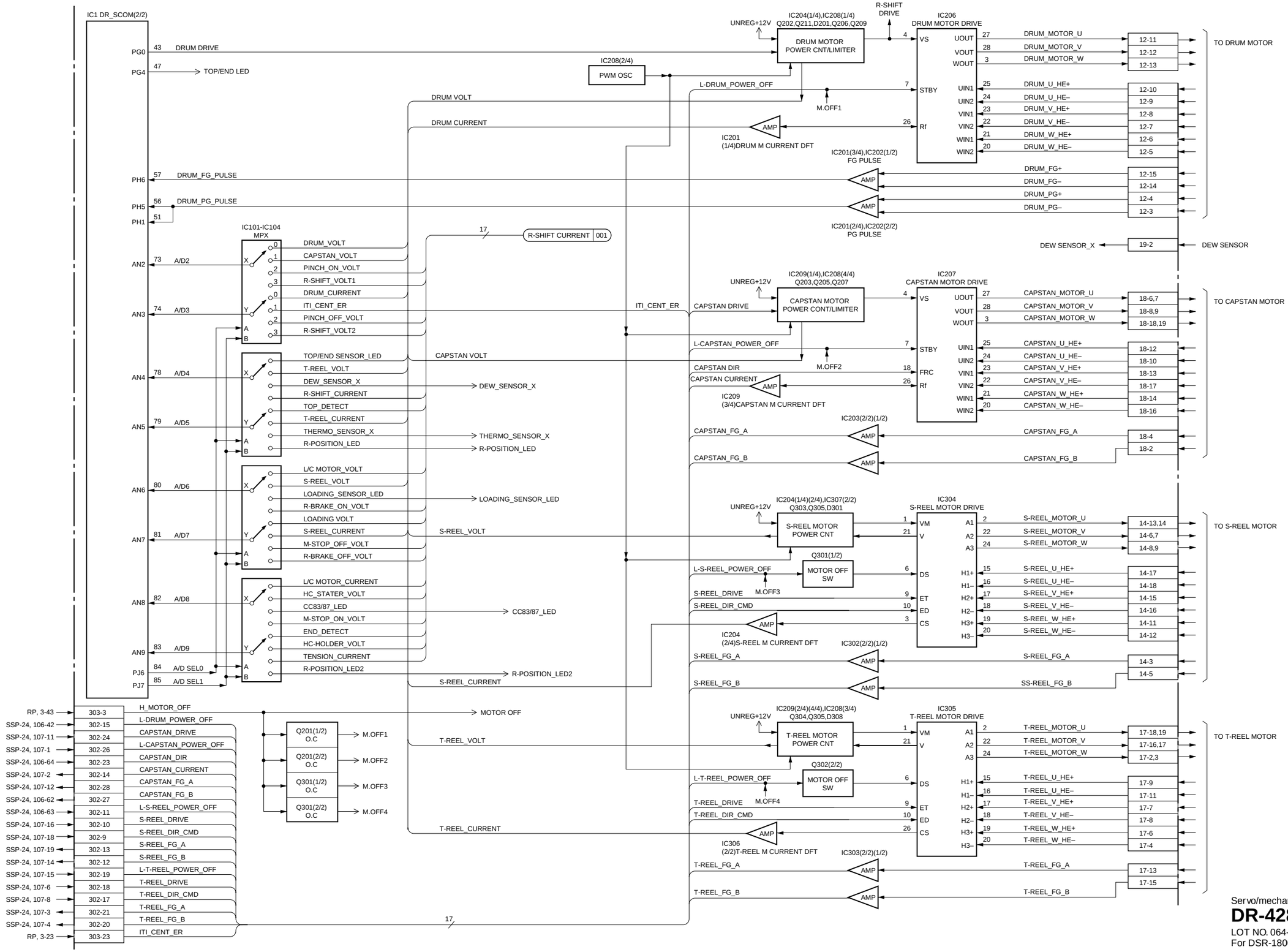

Servo/mechanism control

DR-428 (2/2)

LOT NO. 064-
For DSR-1800/1800P

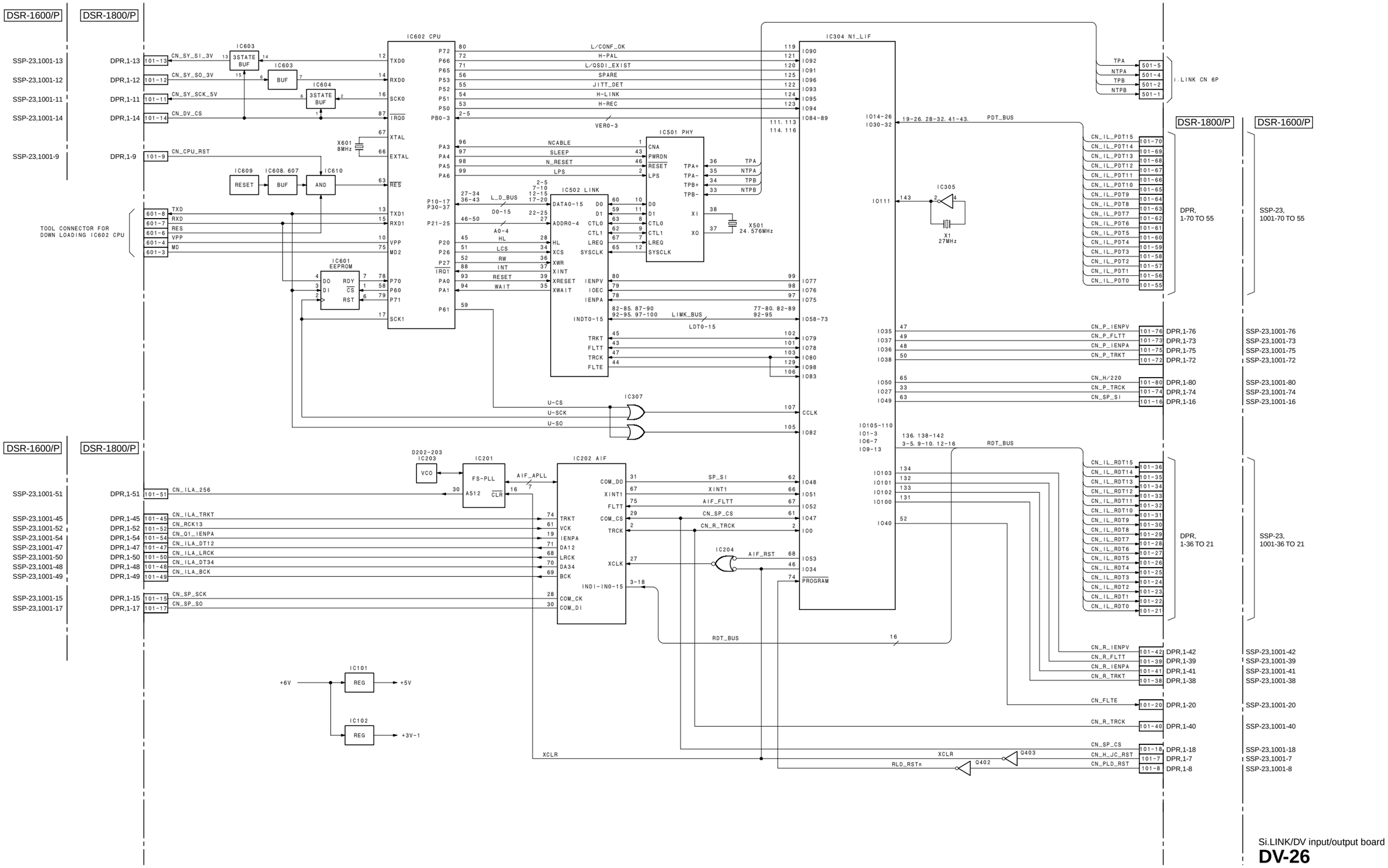
DSR-1600/P
DSR-1800/P
IC602 CPU
IC304 N1_LIF
IC501 PHY
IC502 LINK
IC601 EEPROM
IC603 3STATE BUF
IC604 3STATE BUF
IC609 RESET
IC608, 607 BUF
IC610 AND
IC305
X1 27MHz
X601 8MHz
X501 24.576MHz
IC307
IC201 FS-PLL
IC202 AIF
IC203 VCO
IC204
IC101 REG
IC102 REG
TOOL CONNECTOR FOR DOWN LOADING IC602 CPU
i.LINK CN 6P
DPR, 1-70 TO 55
SSP-23, 1001-70 TO 55
DPR, 1-36 TO 21
SSP-23, 1001-36 TO 21
Si.LINK/DV input/output board
DV-26
LOT NO. 064-
For DSBK-1803

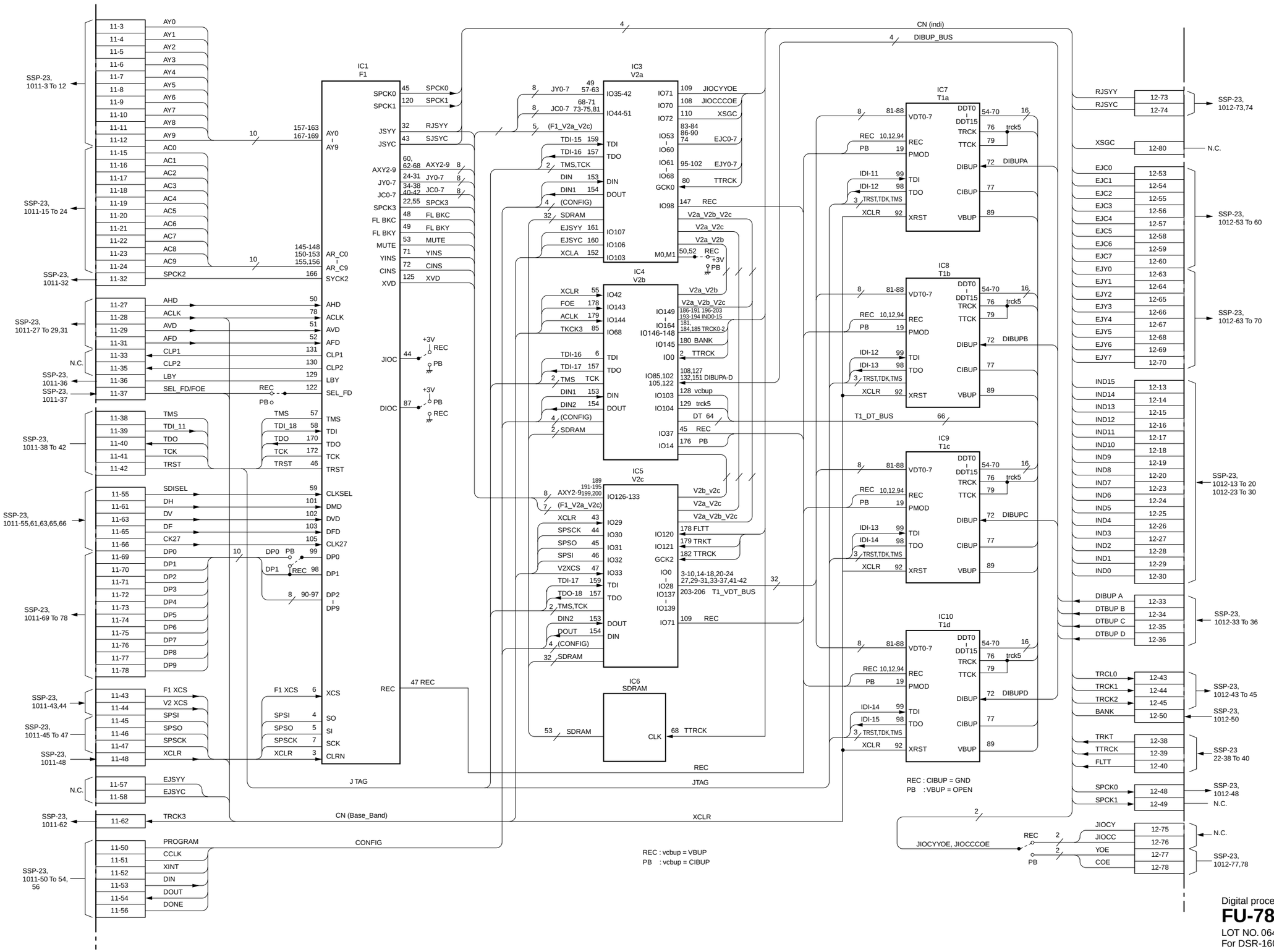

Digital process (PB)

FU-78P

LOT NO. 064-
For DSR-1600/1600P

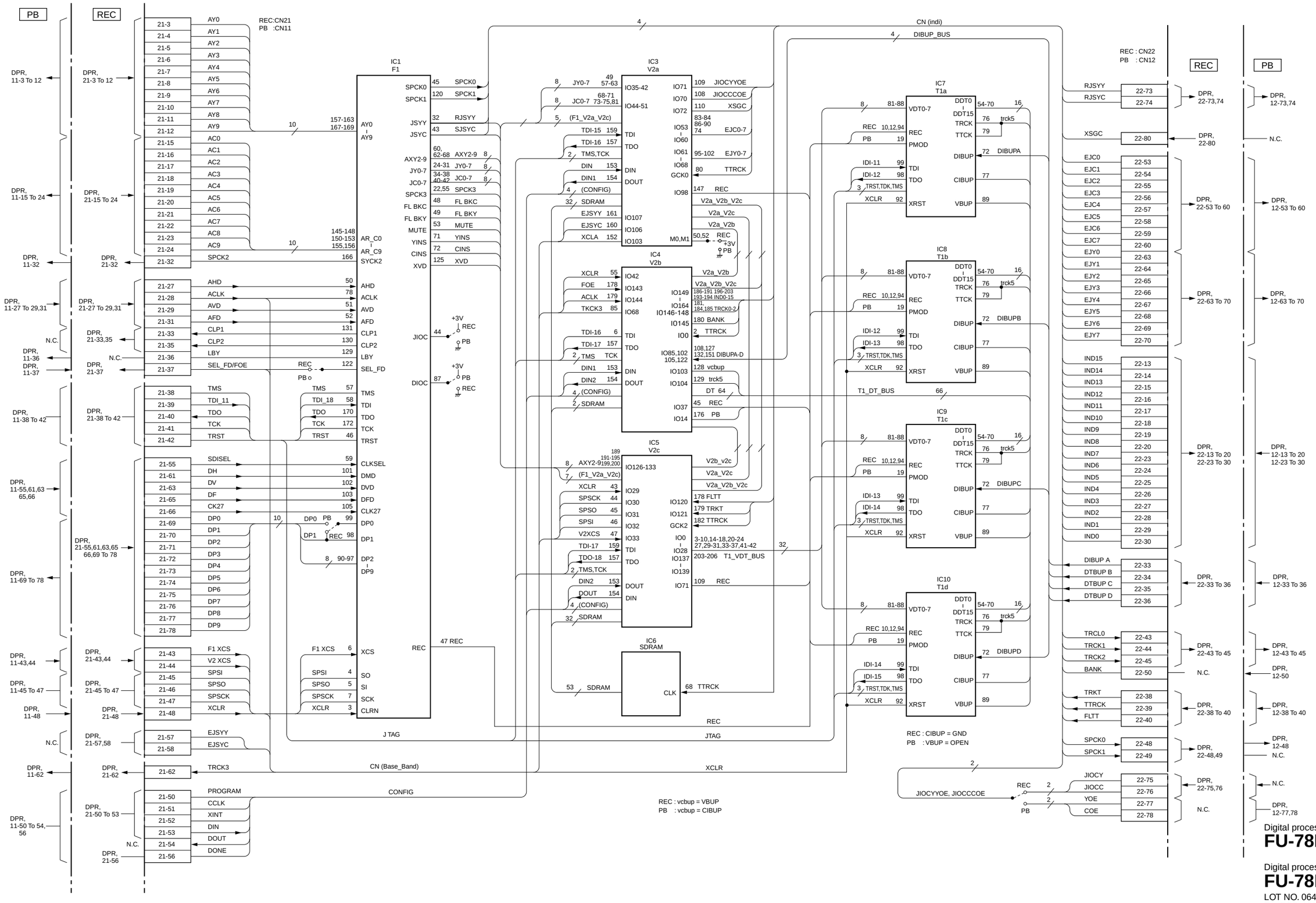
PB
REC
REC:CN21
PB :CN11
IC1 F1
IC3 V2a
IC4 V2b
IC5 V2c
IC6 SDRAM
CN (indi)
DIBUP_BUS
IC7 T1a
IC8 T1b
IC9 T1c
IC10 T1d
REC : CN22
PB : CN12
J TAG
JTAG
CN (Base_Band)
CONFIG
XCLR
REC : vcbup = VBUP
PB : vcbup = CIBUP
REC : CIBUP = GND
PB : VBUP = OPEN
T1_DT_BUS
JIOCYYOE, JIOCCCOE
Digital process (PB)
FU-78P
Digital process (REC)
FU-78R
LOT NO. 064-
For DSR-1800/1800P

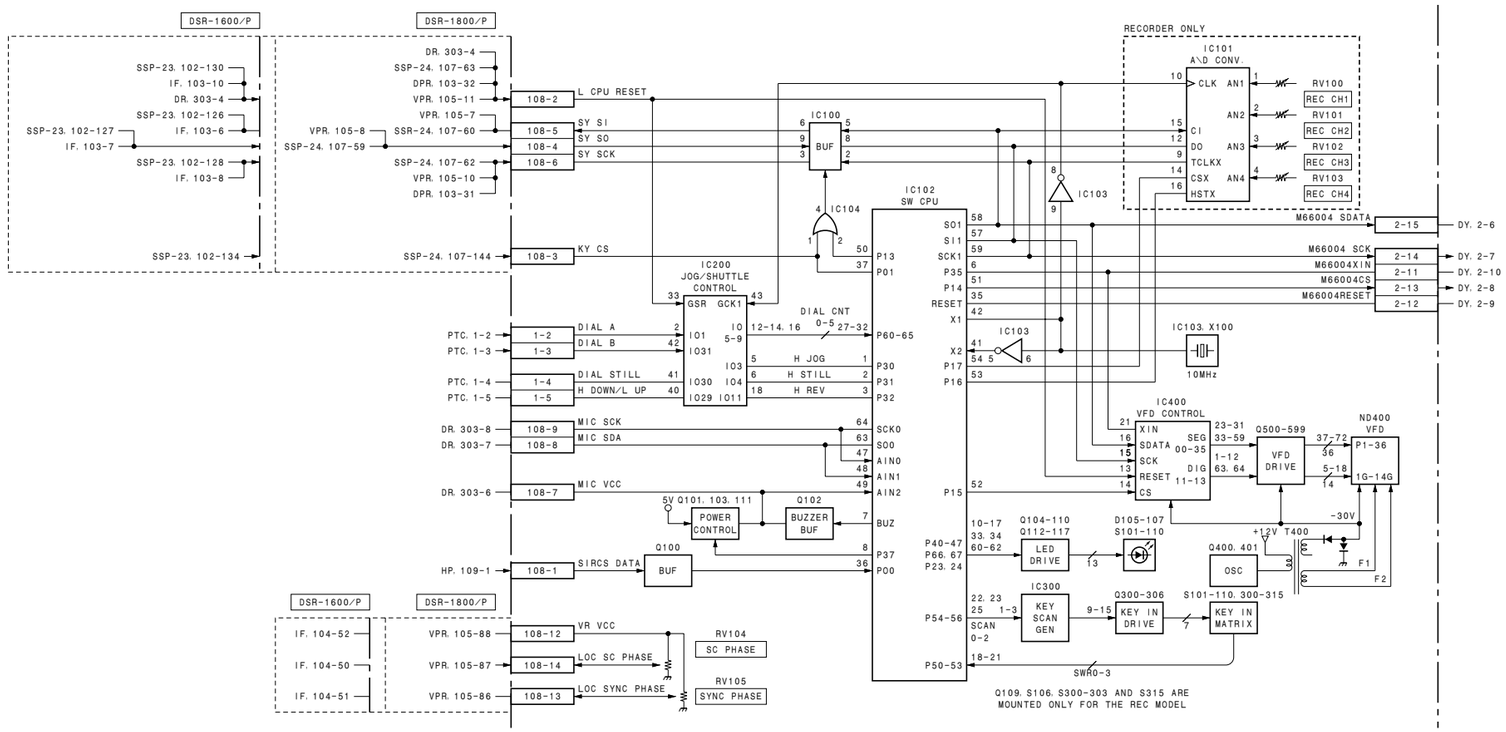

Operation panel
KY-484/484A
LOT NO. 064-

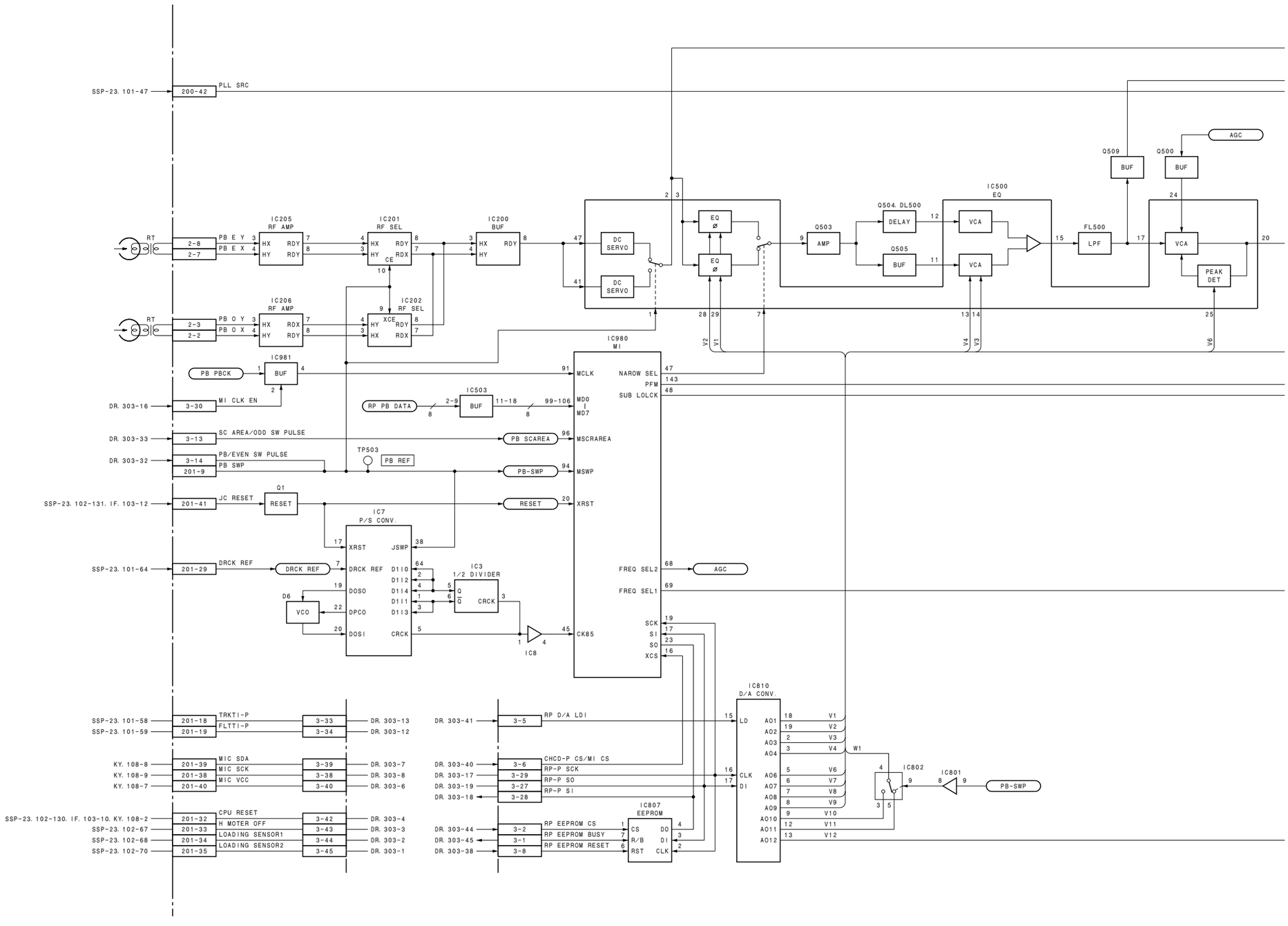
SSP-23. 101-47
200-42
PLL SRC
AGC
Q509
BUF
Q500
BUF
IC500
EQ
Q504. DL500
DELAY
Q505
BUF
Q503
AMP
VCA
VCA
FL500
LPF
VCA
PEAK
DET
RT
2-8
2-7
PB E Y
PB E X
IC205
RF AMP
IC201
RF SEL
IC200
BUF
DC
SERVO
DC
SERVO
EQ
EQ
RT
2-3
2-2
PB O Y
PB O X
IC206
RF AMP
IC202
RF SEL
IC981
BUF
PB PBCK
DR. 303-16
3-30
MI CLK EN
IC980
MI
MCLK
MD0
I
MD7
NAROW SEL
PFM
SUB LOLCK
RP PB DATA
IC503
BUF
DR. 303-33
3-13
SC AREA/ODD SW PULSE
PB SCAREA
MSCRAREA
DR. 303-32
3-14
201-9
PB/EVEN SW PULSE
PB SWP
TP503
PB REF
PB-SWP
MSWP
SSP-23. 102-131. IF. 103-12
201-41
JC RESET
Q1
RESET
RESET
XRST
IC7
P/S CONV.
XRST
JSWP
SSP-23. 101-64
201-29
DRCK REF
DRCK REF
DRCK REF
DOSO
DPCO
DOSI
D1I0
D1I2
D1I4
D1I1
D1I3
CRCK
IC3
1/2 DIVIDER
CRCK
D6
VCO
IC8
CK85
FREQ SEL2
AGC
FREQ SEL1
SCK
SI
SO
XCS
IC810
D/A CONV.
LD
CLK
DI
AO1
AO2
AO3
AO4
AO6
AO7
AO8
AO9
AO10
AO11
AO12
V1
V2
V3
V4
V6
V7
V8
V9
V10
V11
V12
W1
IC802
IC801
PB-SWP
SSP-23. 101-58
201-18
TRKTI-P
3-33
DR. 303-13
SSP-23. 101-59
201-19
FLTTI-P
3-34
DR. 303-12
DR. 303-41
3-5
RP D/A LDI
KY. 108-8
201-39
MIC SDA
3-39
DR. 303-7
KY. 108-9
201-38
MIC SCK
3-38
DR. 303-8
KY. 108-7
201-40
MIC VCC
3-40
DR. 303-6
DR. 303-40
3-6
CHCD-P CS/MI CS
DR. 303-17
3-29
RP-P SCK
DR. 303-19
3-27
RP-P SO
DR. 303-18
3-28
RP-P SI
SSP-23. 102-130. IF. 103-10. KY. 108-2
201-32
CPU RESET
3-42
DR. 303-4
SSP-23. 102-67
201-33
H MOTER OFF
3-43
DR. 303-3
SSP-23. 102-68
201-34
LOADING SENSOR1
3-44
DR. 303-2
SSP-23. 102-70
201-35
LOADING SENSOR2
3-45
DR. 303-1
DR. 303-44
3-2
RP EEPROM CS
DR. 303-45
3-1
RP EEPROM BUSY
DR. 303-38
3-8
RP EEPROM RESET
IC807
EEPROM
CS
R/B
RST
DO
DI
CLK

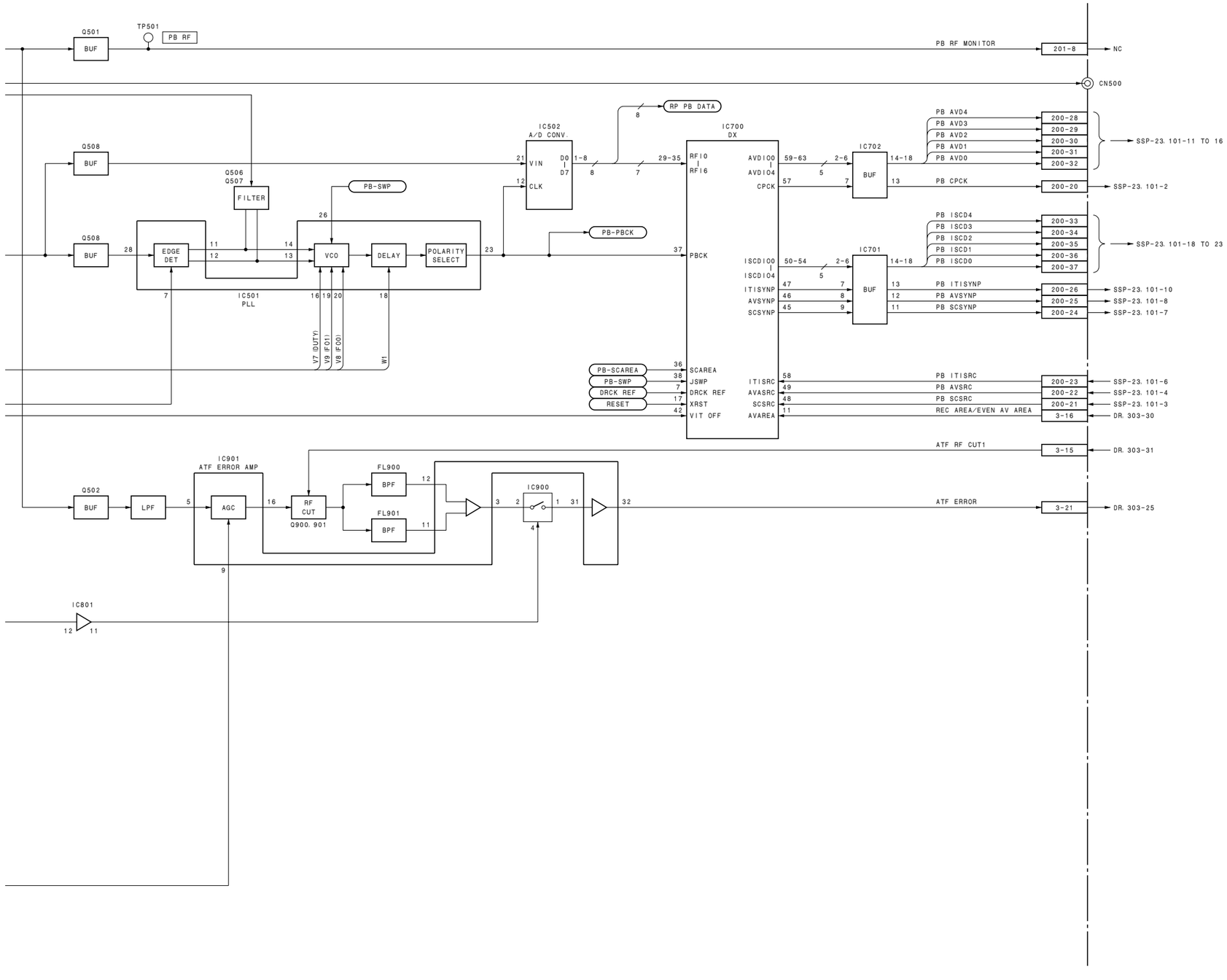

RF PB, ATF detection
PRE-45
LOT NO. 064-
For DSR-1600/1600P

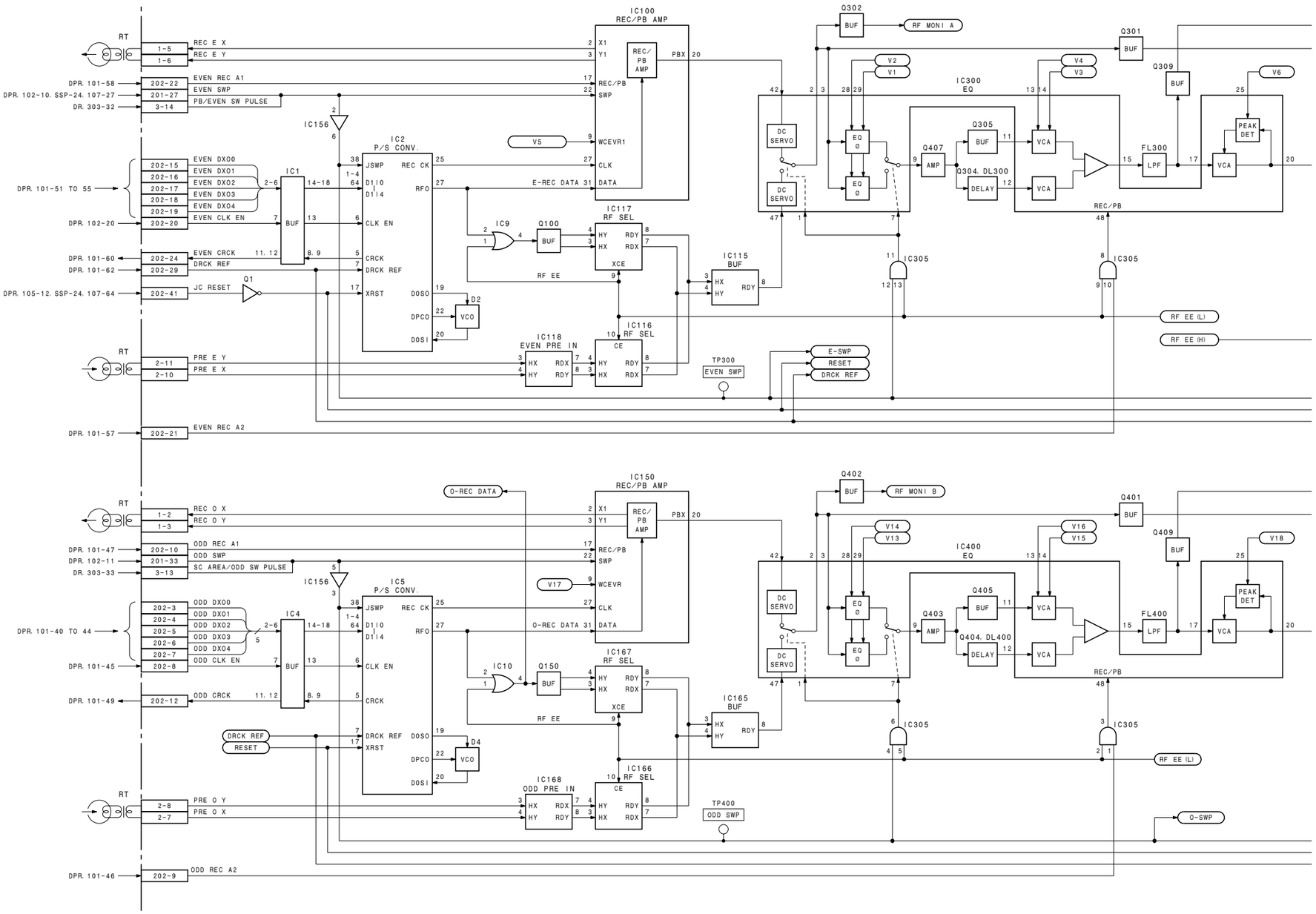
RT
REC E X
REC E Y
EVEN REC A1
EVEN SWP
PB/EVEN SW PULSE
DPR. 101-58
DPR. 102-10. SSP-24. 107-27
DR. 303-32
IC156
IC2
P/S CONV.
JSWP
REC CK
RFO
CLK EN
CRCK
DRCK REF
XRST
DOSO
DPCO
DOSI
VCO
D2
V5
WCEVR1
CLK
DATA
E-REC DATA
IC100
REC/PB AMP
REC/PB SWP
PBX
IC1
BUF
EVEN DXO0
EVEN DXO1
EVEN DXO2
EVEN DXO3
EVEN DXO4
EVEN CLK EN
EVEN CRCK
DRCK REF
JC RESET
DPR. 101-51 TO 55
DPR. 102-20
DPR. 101-60
DPR. 101-62
DPR. 105-12. SSP-24. 107-64
Q1
IC9
Q100
IC117
RF SEL
HY
HX
RDY
RDX
XCE
RF EE
IC115
IC116
CE
IC118
EVEN PRE IN
PRE E Y
PRE E X
DPR. 101-57
EVEN REC A2
TP300
EVEN SWP
E-SWP
RESET
Q302
RF MONI A
Q301
V2
V1
V4
V3
IC300
EQ
DC SERVO
EQ Ø
Q407
AMP
Q305
Q304. DL300
DELAY
VCA
FL300
LPF
Q309
PEAK DET
V6
REC/PB
IC305
RF EE (L)
RF EE (H)
RT
REC O X
REC O Y
ODD REC A1
ODD SWP
SC AREA/ODD SW PULSE
DPR. 101-47
DPR. 102-11
DR. 303-33
IC5
P/S CONV.
IC4
ODD DXO0
ODD DXO1
ODD DXO2
ODD DXO3
ODD DXO4
ODD CLK EN
ODD CRCK
DPR. 101-40 TO 44
DPR. 101-45
DPR. 101-49
O-REC DATA
V17
WCEVR
IC10
Q150
IC167
IC165
IC166
IC168
ODD PRE IN
PRE O Y
PRE O X
DPR. 101-46
ODD REC A2
TP400
ODD SWP
O-SWP
Q402
RF MONI B
Q401
V14
V13
V16
V15
IC400
Q405
Q403
Q404. DL400
Q409
V18

http://getMANUAL.com

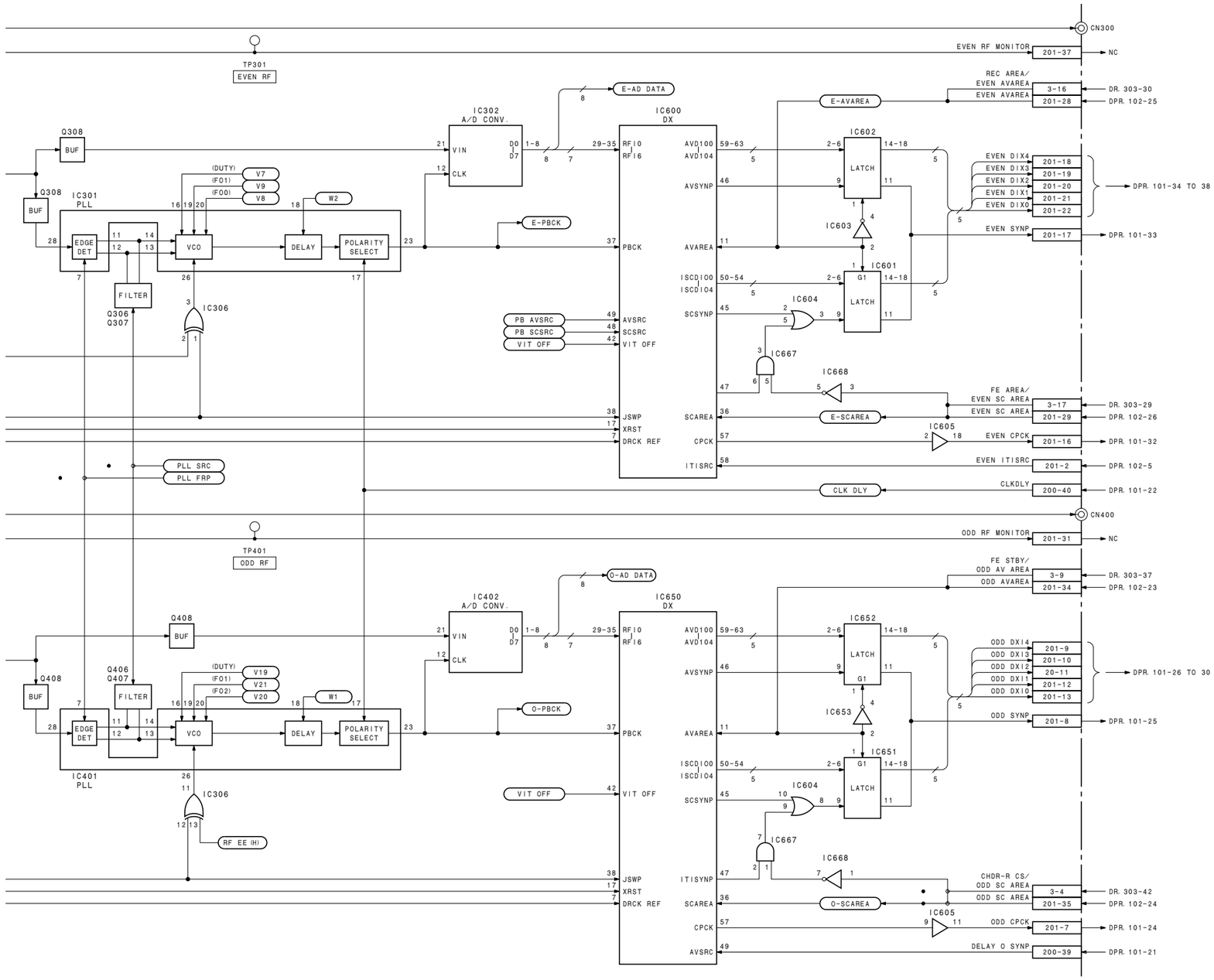

RF REC/PB, ATF detection

RP-120 (1/2)

LOT NO. 064-
For DSR-1800/1800P

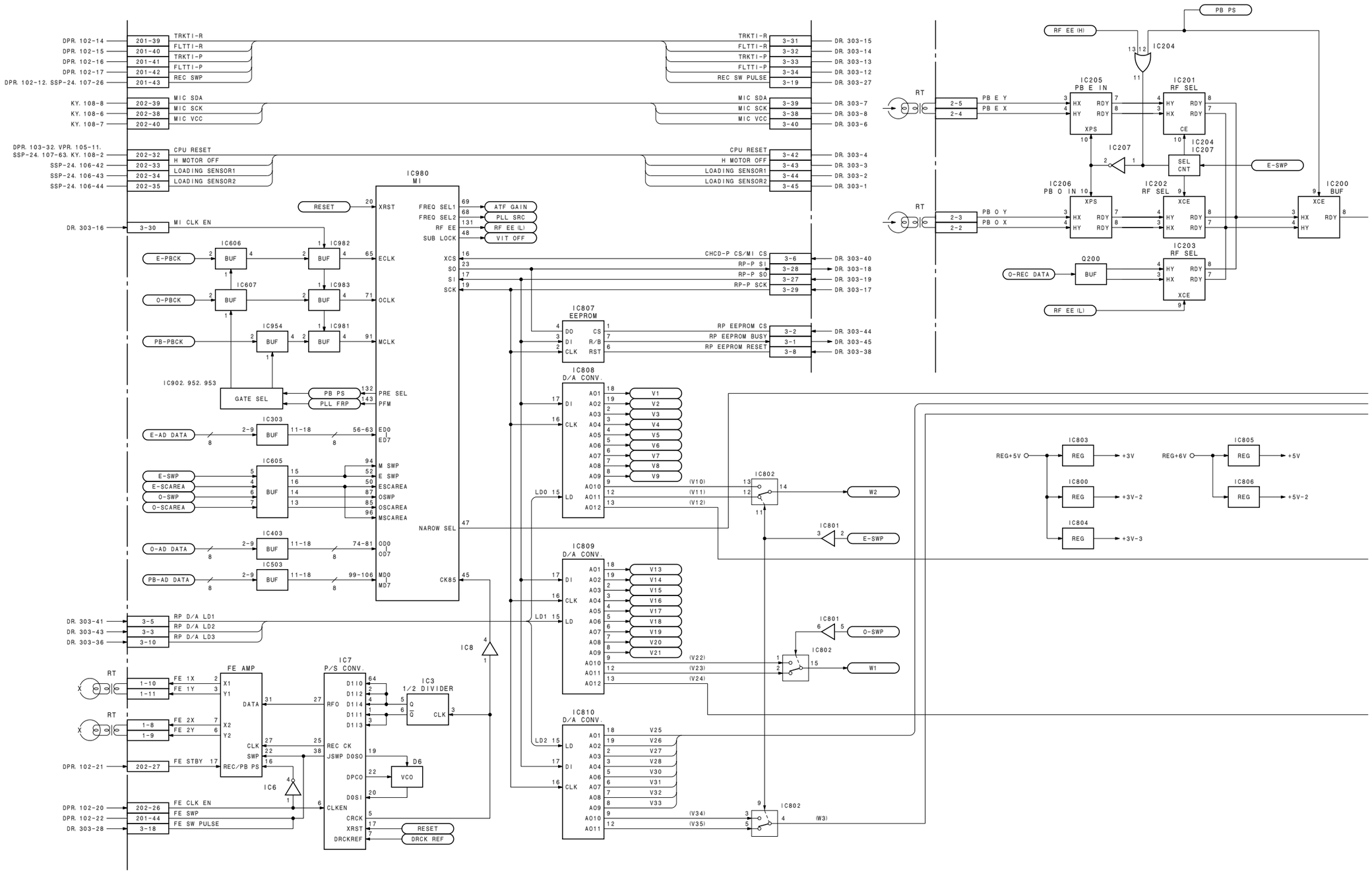
IC980
MI
IC807
EEPROM
IC808
D/A CONV.
IC809
D/A CONV.
IC810
D/A CONV.
IC902, 952, 953
GATE SEL
IC303
IC605
IC403
IC503
IC606
IC607
IC954
IC982
IC983
IC981
IC802
IC801
IC803
IC800
IC804
IC805
IC806
IC204
IC205
PB E IN
IC201
RF SEL
IC206
PB O IN
IC202
RF SEL
IC203
RF SEL
IC200
BUF
IC207
Q200
FE AMP
IC7
P/S CONV.
IC3
1/2 DIVIDER
IC8
IC6
D6
VCO
RESET
DRCK REF
E-SWP
O-SWP
W1
W2
RF EE (H)
RF EE (L)
PB PS
O-REC DATA
REG+5V
REG+6V
+3V
+3V-2
+3V-3
+5V
+5V-2

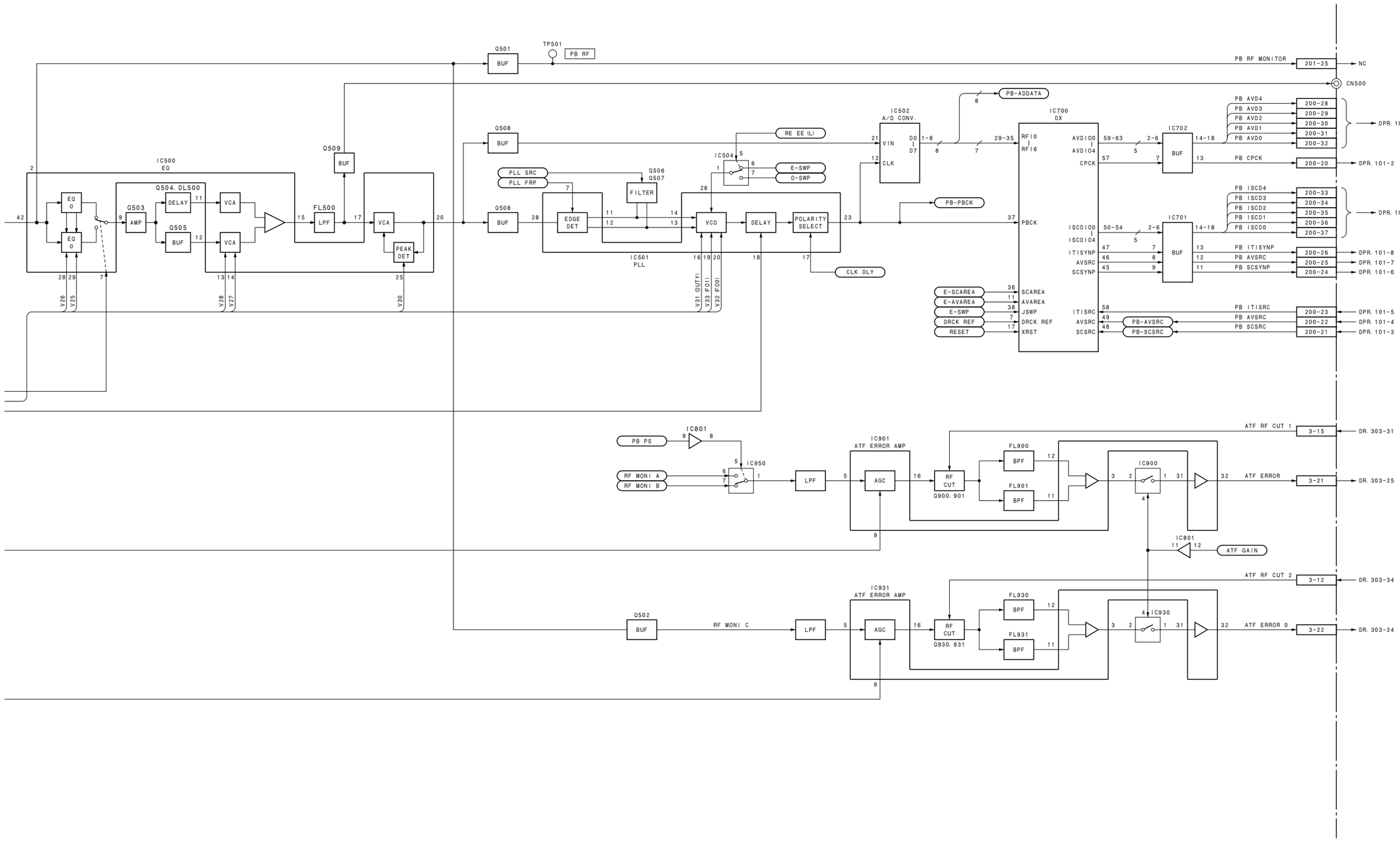

RF REC/PB, ATF detection

RP-120 (2/2)

LOT NO. 064-
For DSR-1800/1800P

DSR-1800/P ONLY

SDTI IN (QSDI)

CN201 (1/2)

S/P RES

IC201 S/P CONV

IC202 EDH DEC

CRC ERR

D201

RES3

SDI/SDTI INPUT

SDTI_RDT 0-7

SDTI_RF,_RV,_RH

PCERD

3AD0-7

3CAD0-A7

RD,WR

CK

IC203 MPX

IC204 MPX

CK,STDI_RF,_RV,_RH

SDTI_AUDIO_OUT

SDI/SDTI_RF

REC_QSDT0
REC_QSDT1
REC_QSDT2
REC_QSDT3
REC_QSDT4
REC_QSDT5
REC_QSDT6
REC_QSDT7
PCE RD

SDTI_RCK27
SDTI_RF
SDTI_RV
SDTI_RH

Q_DT12
Q_DT34
Q_256FS
Q_BCK
Q_LRCK

DPR,2-14 2-14 SP_R_SCK
DPR,2-15 2-15 SP_R_SO
DPR,2-16 2-16 SP_R_SI
DPR,2-17 2-17 AIFQ_CS

Q203

DPR

D202

IC205 1/2 DIV

IC104 AUDIO I/F

DPR,2-19 2-19 AIFQ_RDT0
DPR,2-20 2-20 AIFQ_RDT1
DPR,2-21 2-21 AIFQ_RDT2
DPR,2-22 2-22 AIFQ_RDT3
DPR,2-23 2-23 AIFQ_RDT4
DPR,2-24 2-24 AIFQ_RDT5
DPR,2-25 2-25 AIFQ_RDT6
DPR,2-26 2-26 AIFQ_RDT7
DPR,2-27 2-27 AIFQ_RDT8
DPR,2-28 2-28 AIFQ_RDT9
DPR,2-29 2-29 AIFQ_RDT10
DPR,2-30 2-30 AIFQ_RDT11
DPR,2-31 2-31 AIFQ_RDT12
DPR,2-32 2-32 AIFQ_RDT13
DPR,2-33 2-33 AIFQ_RDT14
DPR,2-34 2-34 AIFQ_RDT15
DPR,2-36 2-36 Q_TRCK
DPR,2-13 2-13 Q1_IENPA
DPR,2-37 2-37 Q_FLTT
DPR,2-38 2-38 Q_TRKT

Q_256F

IC103 FS-PLL

IC106, 107 HUNG DET.

D101

IC302 P/S CONV.

QSDI_OUT_0-9

CK1

Q304-Q306 SDI OUT

CN201 (2/2)

SDTI OUT (QSDI)

Q502

UNLOCK

D301

IC402 DIF CPU

Q301,Q203 BUFF

Q201,Q202 BUFF

S/P RES

P_RESET

D401

L_CPU_RESET
DIF_SDI_CS
SY_SO_3V
SY_SI_3V
SY_SCK_5V

IC401

DPR,2-75 2-75 L_CPU_RESET
DPR,2-11 2-11 DIF_SDI_CS
DPR,2-9 2-9 SY_SO_3V
DPR,2-10 2-10 SY_SI_3V
DPR,2-8 2-8 SY_SCK_5V

DSR-1800/P DSR-1600/P

SSP-23,1002-75
SSP-23,1002-11
SSP-23,1002-9
SSP-23,1002-10
SSP-23,1002-8

IC303

IC301 QSDI ENC

IC404 ADDRESS DEC

IC406

IC405

IC403 D-LATCH

IC101 5V REG

IC102 3.3V REG

+6V +5V +5V +3.3V

DSR-1600/P DSR-1800/P

SSP-23, 1002-59 TO 66

DPR, 2-59 TO 66

PB_QSDT0
PB_QSDT1
PB_QSDT2
PB_QSDT3
PB_QSDT4
PB_QSDT5
PB_QSDT6
PB_QSDT7
NSG_TOFOE
NSG_TFH
QSDIP_CK27

SSP-23,1002-68 DPR,2-68
SSP-23,1002-69 DPR,2-69
SSP-23,1002-67 DPR,2-67

IC803 AES/EBU ENC. DEC.

IC802

Q401 H_JC_RESET

RES3

DPR,2-7 2-7

SSP-23,1002-27

X401 6.6762MHz

SDTI (QSDI) input/output board

SDI-61

LOT NO. 064-
For DSBK-1802

SDTI (QSDI) output board

SDI-61A

LOT NO. 064-
For DSBK-1602

DSR-1600/P
DSR-1800/P
SSP-23, 1003-57 TO 48
DPR, 3-57 TO 48
SSP-23,1003-68
SSP-23,1003-67
SSP-23,1003-58
DPR,3-68
DPR,3-67
DPR,3-58
SSP-23,1003-60
SSP-23,1003-61
DPR,3-60
DPR,3-61
SSP-23, 1003-65 TO 62
DPR, 3-65 TO 62
3-57
3-56
3-55
3-54
3-53
3-52
3-51
3-50
3-49
3-48
3-68
3-67
3-58
3-60
3-61
3-65
3-64
3-63
3-62
P_DP0
P_DP1
P_DP2
P_DP3
P_DP4
P_DP5
P_DP6
P_DP7
P_DP8
P_DP9
NSG_OFOE
NSG_FH
SDIP_CK27
SDIP_DT12
SDIP_DT34
SDIP_512FS
SDIP_128FS
SDIP_BCK
SDIP_LRCK
IC304, 305
DFF
CK
IC303,306
BUFF
IC309
SYNC. ADD
VD0
VD9
EXTF
EXTH
CK27
ANC0
ANC9
ANIS
MUD0
MUD9
ANEV
SYNC
IC312
EDH ENC
IDATA0
IDATA9
ODATA0
ODATA9
OCLOCK
AD0
AD7
A0
A3
RD,WR
CS
APEDA
ANCUES
ANCIDH
APIDA
FFEDA
FFIDA
RESET
IC308
AUDIO ENC
IA12
IA34
ICCK
IBCK
IACK
IVCK
ISYN
ICLR
OAD0
OAD9
OADB
IWC
ICEN
IC307,310,311
Q301,302
DLY
IC311
NP0
RES 5
SDI_OUT_0-9
DRIVER
IC401,402
IC403
P/S CONV.
D0X
D9X
PCK
RES
SX
SY
LST
Q404-Q407
SDI OUT
CN102 (1/2)
CN102 (2/2)
SDI OUT1
SDI OUT2
Q402
D401
UNLOCK
BUFF
Q401
Q403
IC703 (2/2)
DIF CPU
IC901
ANC_EDA
ANC_IDA
AP_EDA
AP_IDA
FF_EDA
FF_IDA
P61
P10
P11
P12
P13
P14
P15
CL703
IC701
IC702
P35
P34
IC707, 706
ADDRESS DEC
R-CS
AES_CS
IC713
IN_AU
OUT_EDH
OUT_AU
ASTB
IC711
A8
A9
A10
A11
5AD0-7
5CA0-A3
RD,WR
5WR
OUT_AU
3AD0-7
A0-A7
IC602
IC603 (2/2)
AES/EBU ENC. DEC.
DSR-1800/P ONLY
IC603 (1/2)
AES/EBU ENC. DEC.
IC606 (4/6)
IC609 (4/6)
AES_IN_DT12
AES_IN_LRCK12
AES_IN_BCK12
AES_IN_256FS12
AES_IN_DT34
AES_IN_LRCK34
AES_IN_BCK34
AES_IN_256FS34
INDT12, FS12, 64FS12, 256FS12
INDT34, FS34, 64FS34, 256FS34
IC501
+6V
−5V REG
IC502
AES RECEIVER
IC609 (2/6)
CN103
IN 1/2
IN 3/4
AUDIO I/O (AES/EBU)
OUT 1/2
OUT 3/4
IC503(1/2)
IC503(2/2)
AMP
IC605
AUDIO_OUT MUTE
AEST0
AEST1
AESO0
AESO1
RLR0
RLR1
IC607,611,613,615
IC608,610,612,614
FS-PLL
FS12
64FS12
256FS12
FS34
64FS34
256FS34
SDI, AES/EBU input/output board
SDI-62 (1/2)
LOT NO. 064-
For DSBK-1801
SDI, AES/EBU output board
SDI-62A (1/2)
LOT NO. 064-
For DSBK-1601

SDI-62/62A (2/2)

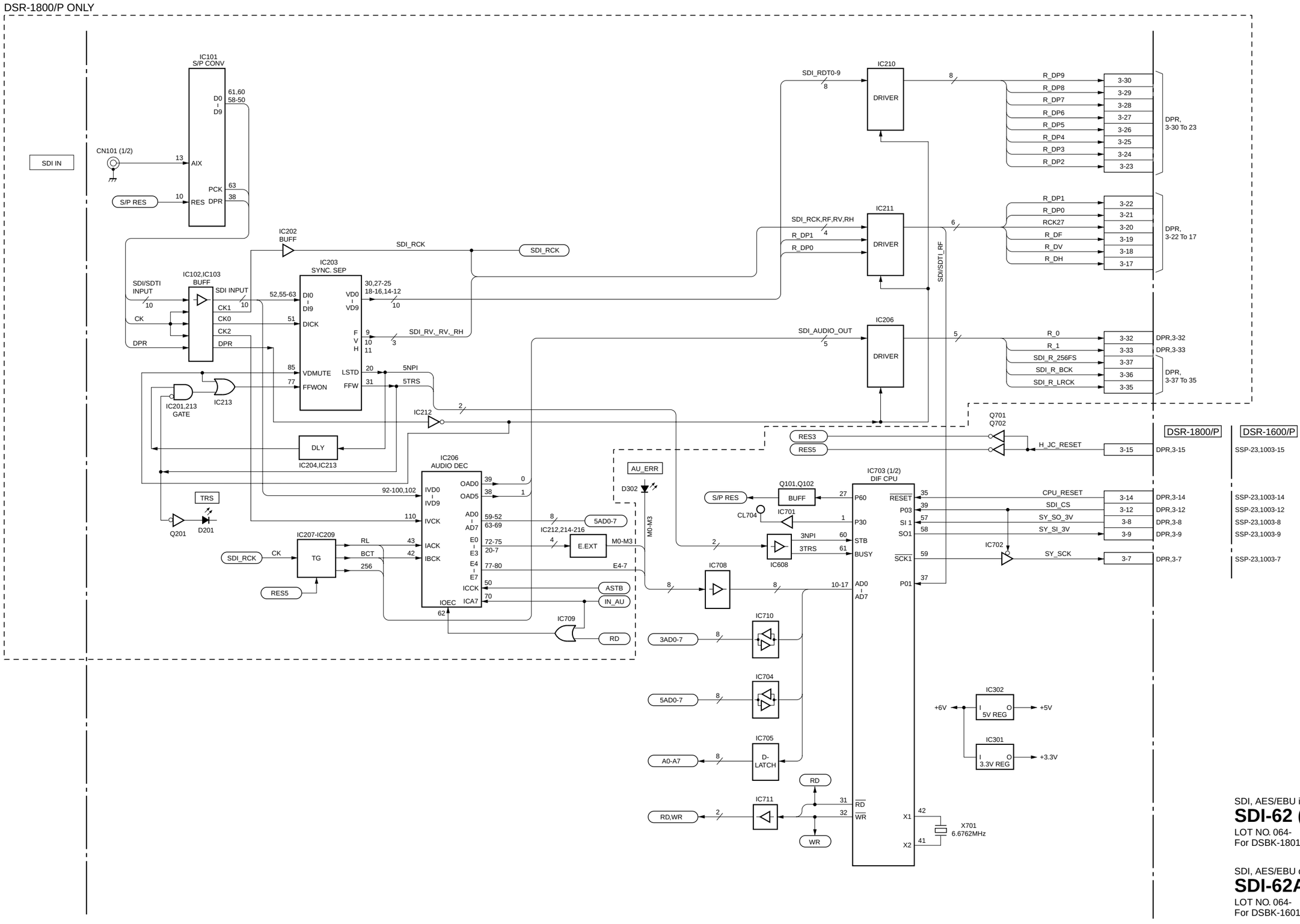

SDI, AES/EBU input/output board

SDI-62 (2/2)

LOT NO. 064-
For DSBK-1801

SDI, AES/EBU output board

SDI-62A (2/2)

LOT NO. 064-
For DSBK-1601

SSP-23 (1/5)

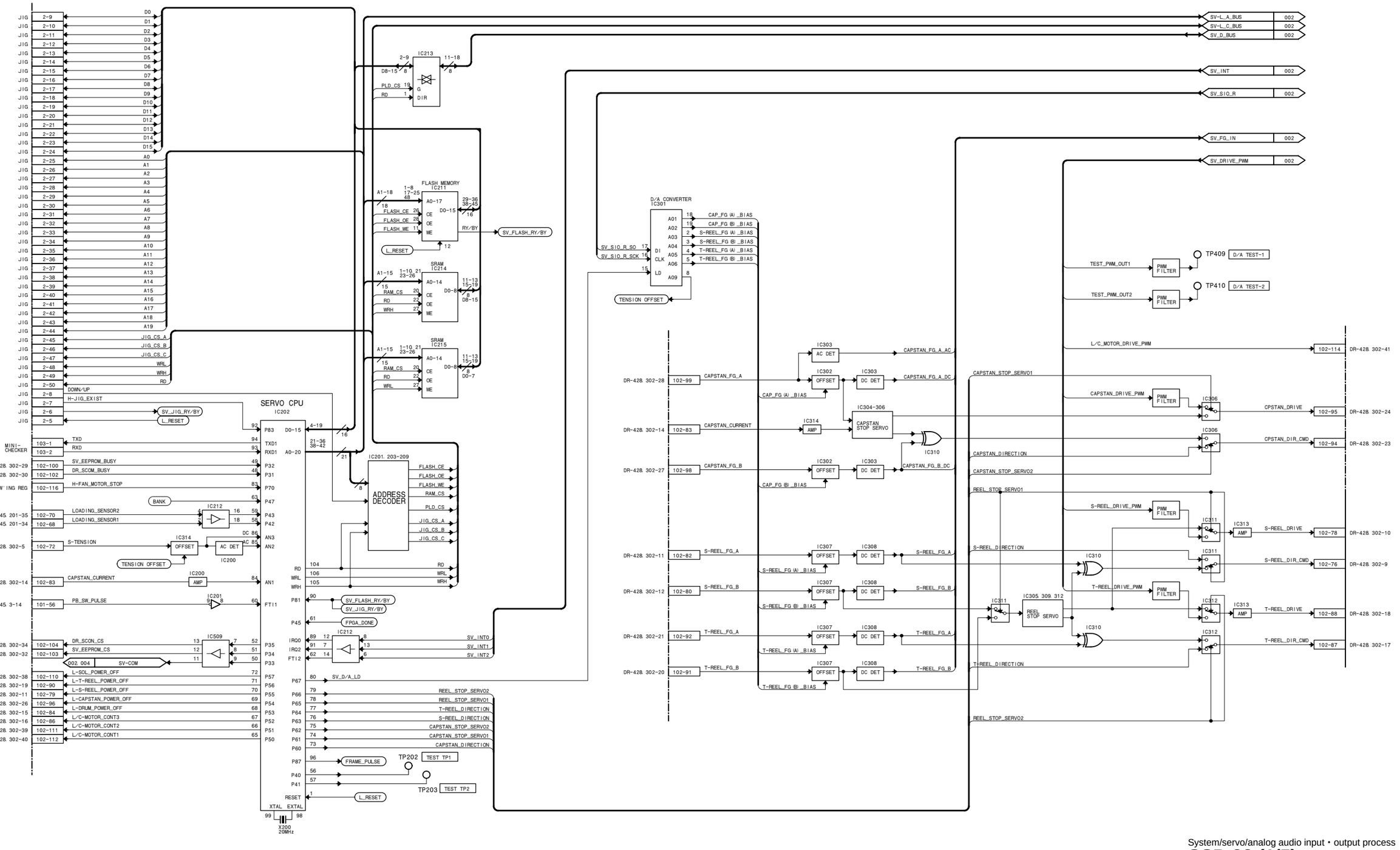

System/servo/analog audio input・output process

SSP-23 (1/5)

LOT NO. 064-

13-30

SSP-23 (2/5)

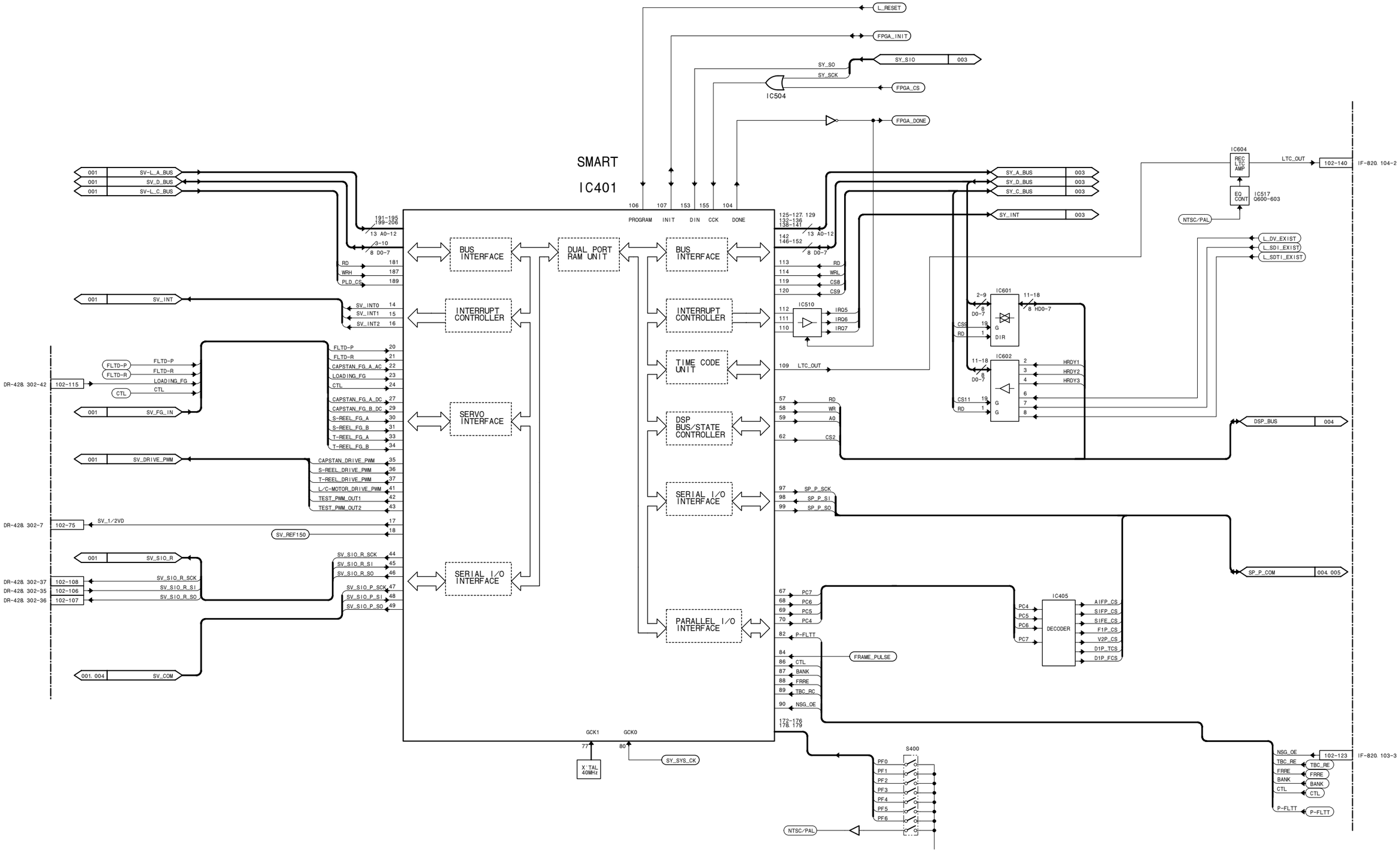

System/servo/analog audio input・output process

SSP-23 (2/5)

LOT NO. 064-

13-31

SSP-23 (3/5)

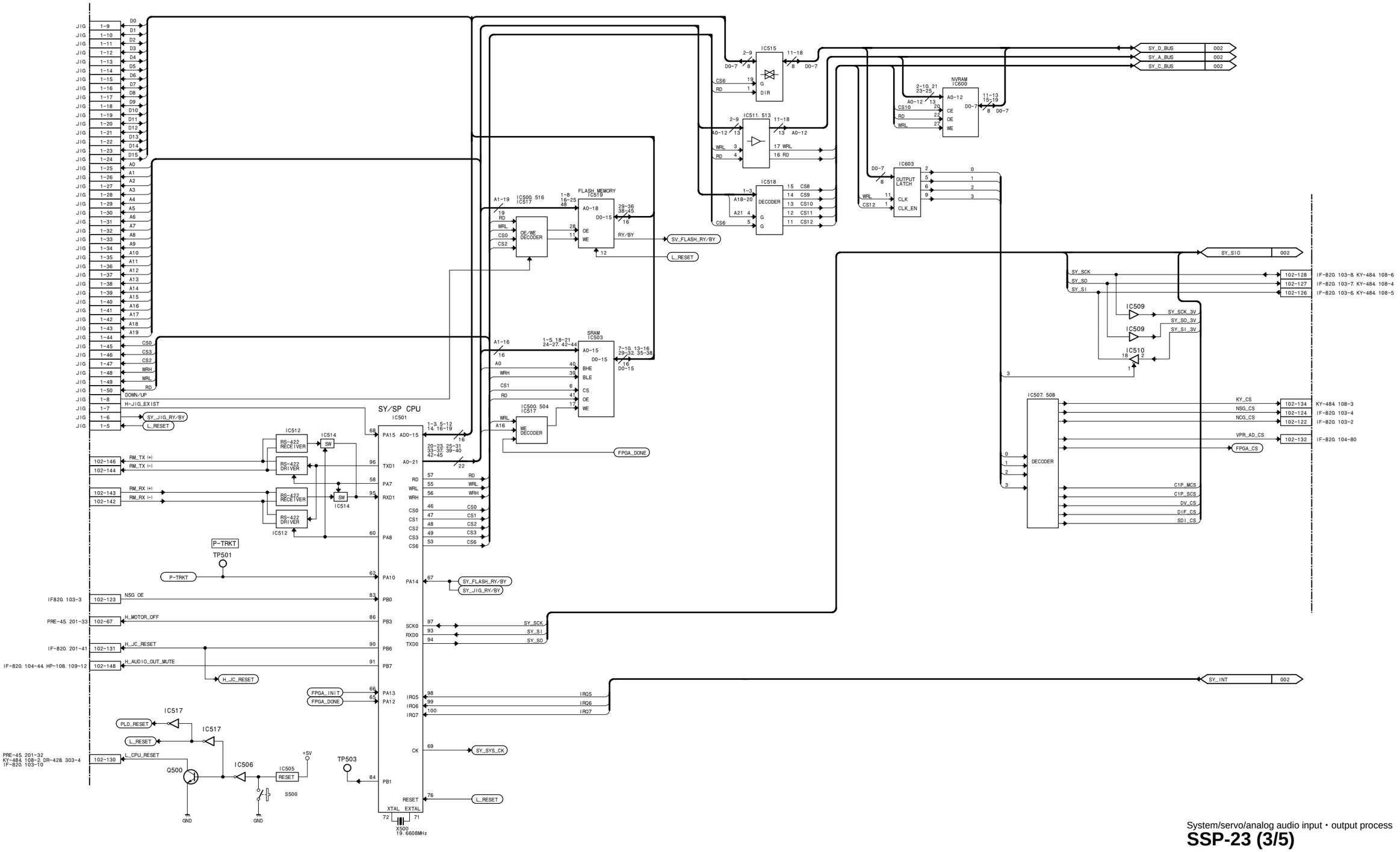

System/servo/analog audio input・output process

SSP-23 (3/5)

LOT NO. 064-

13-32

http://getMANUAL.com

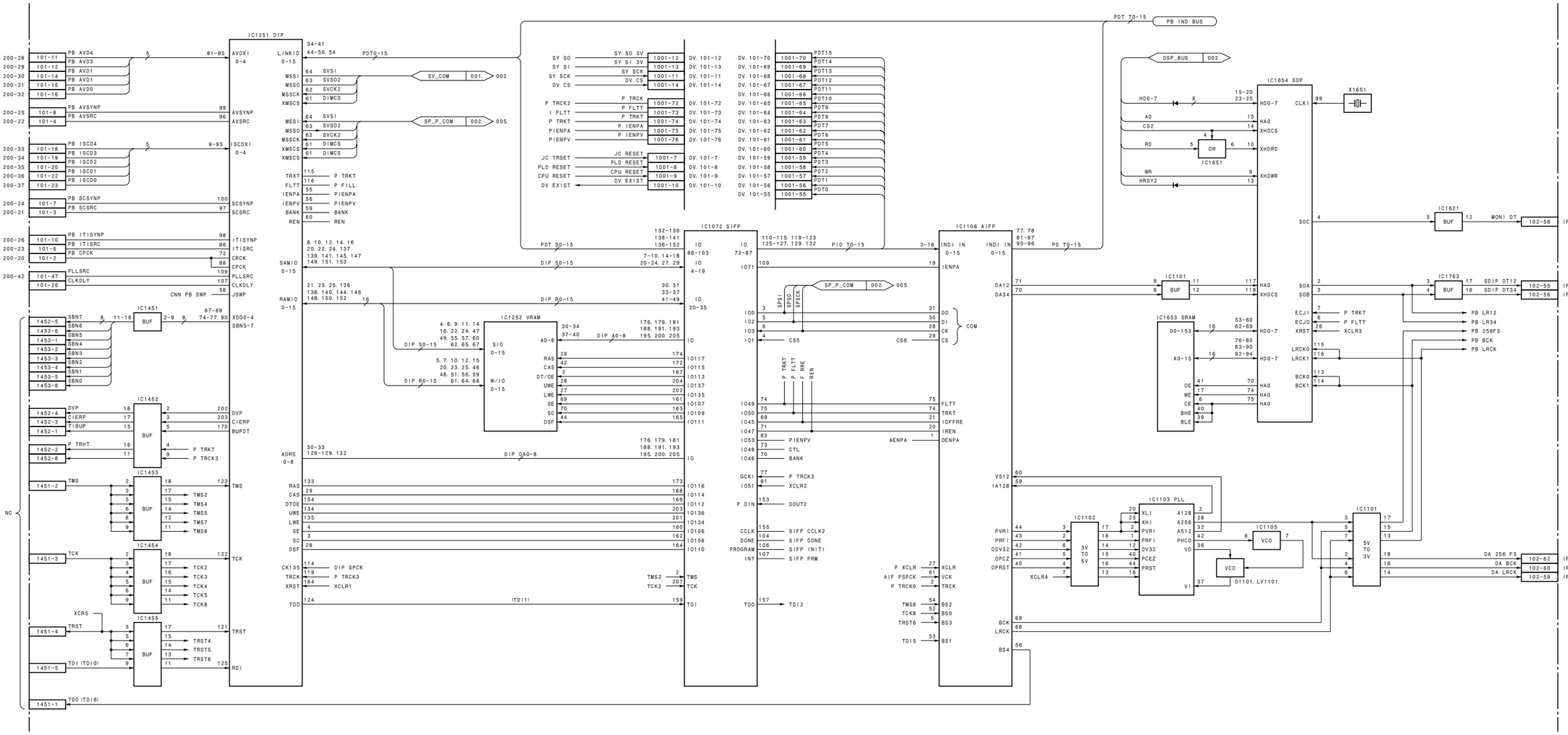

System/servo/analog audio input・output process

SSP-23 (4/5)

LOT NO. 064-

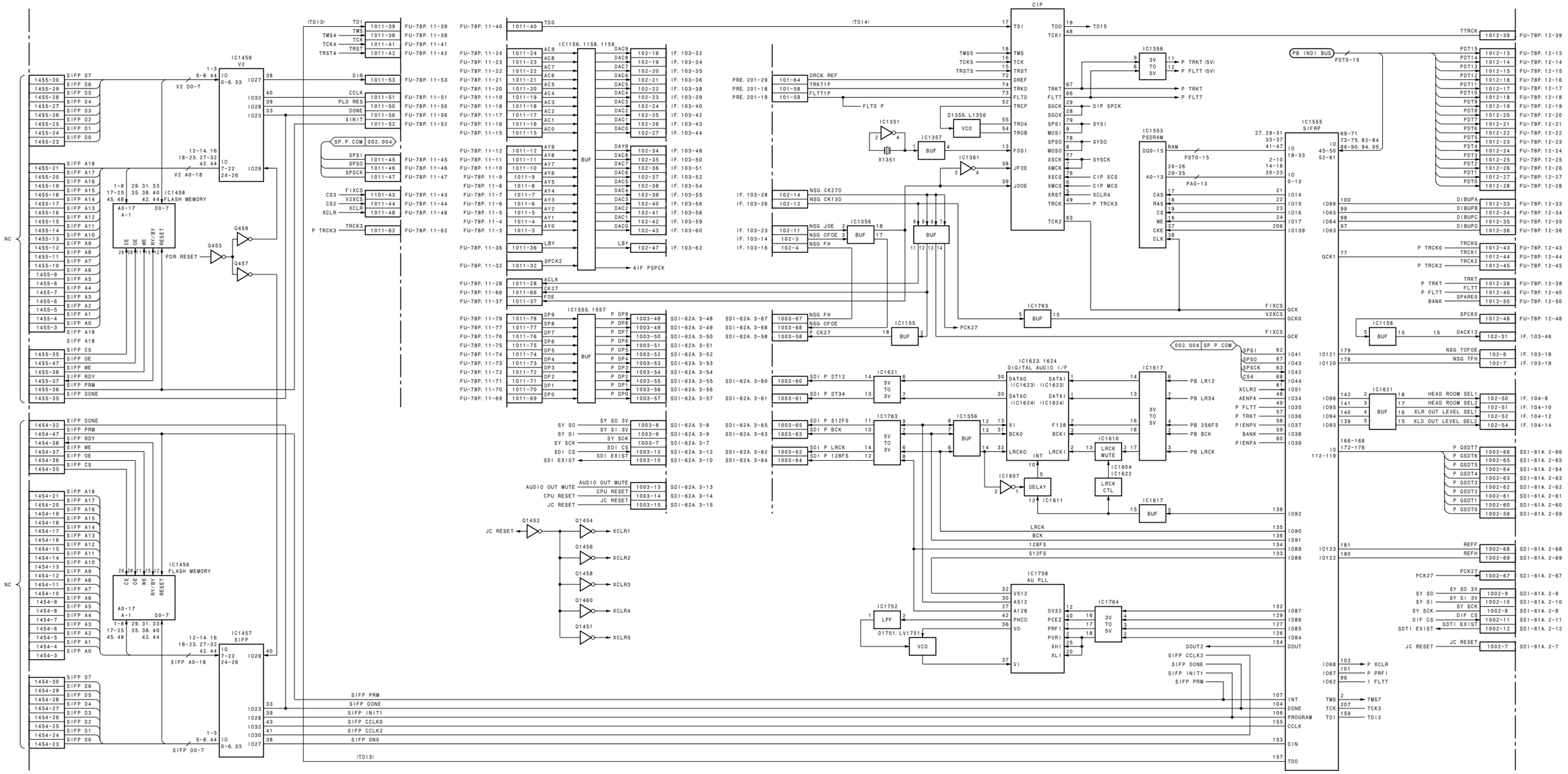

System/servo/analog audio input • output process

SSP-23 (5/5)

LOT NO. 064-

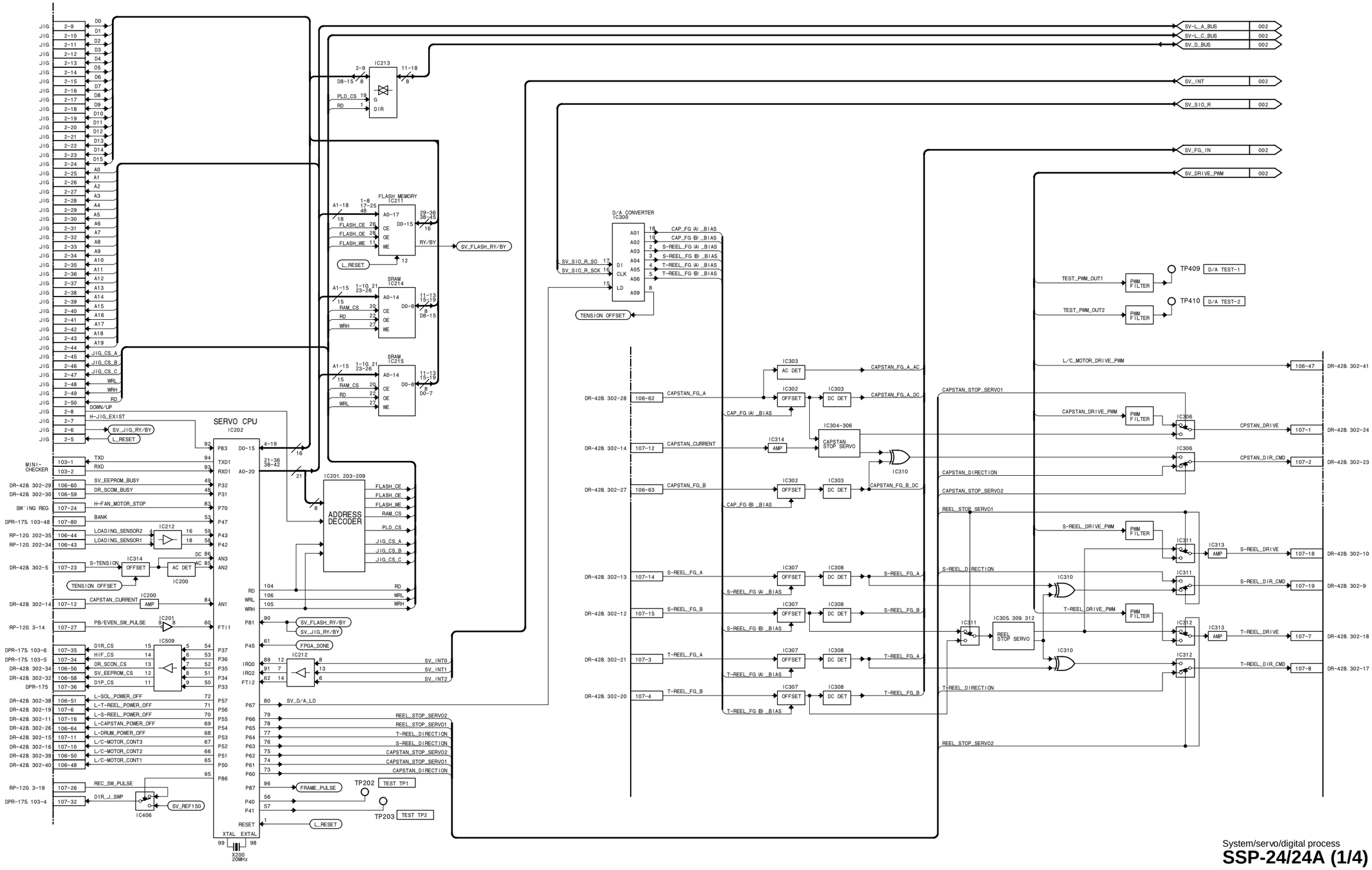

System/servo/digital process

SSP-24/24A (1/4)

LOT NO. 064-

SSP-24/24A (2/4)

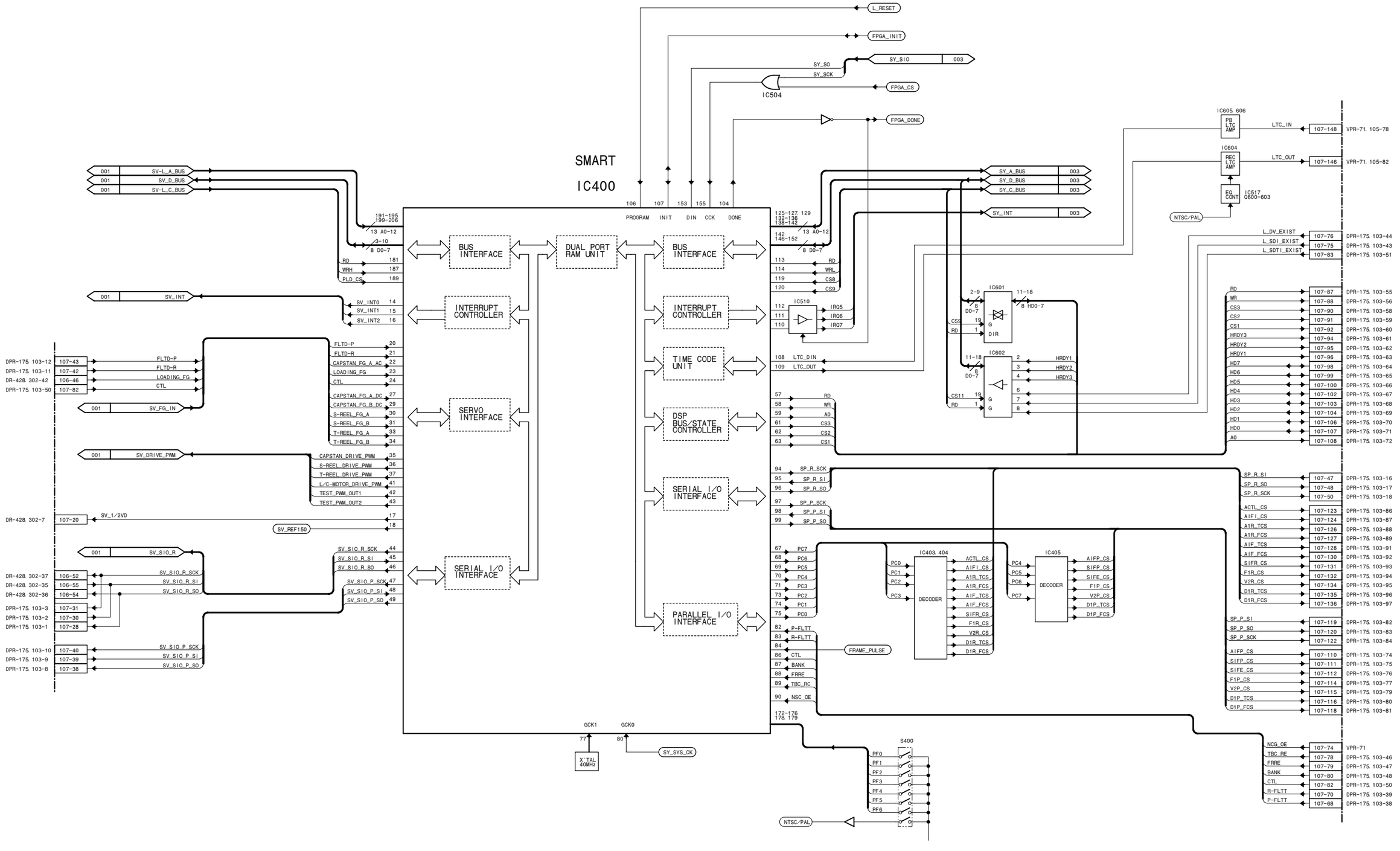

System/servo/digital process

SSP-24/24A (2/4)

LOT NO. 064-

13-36

SSP-24/24A (3/4)

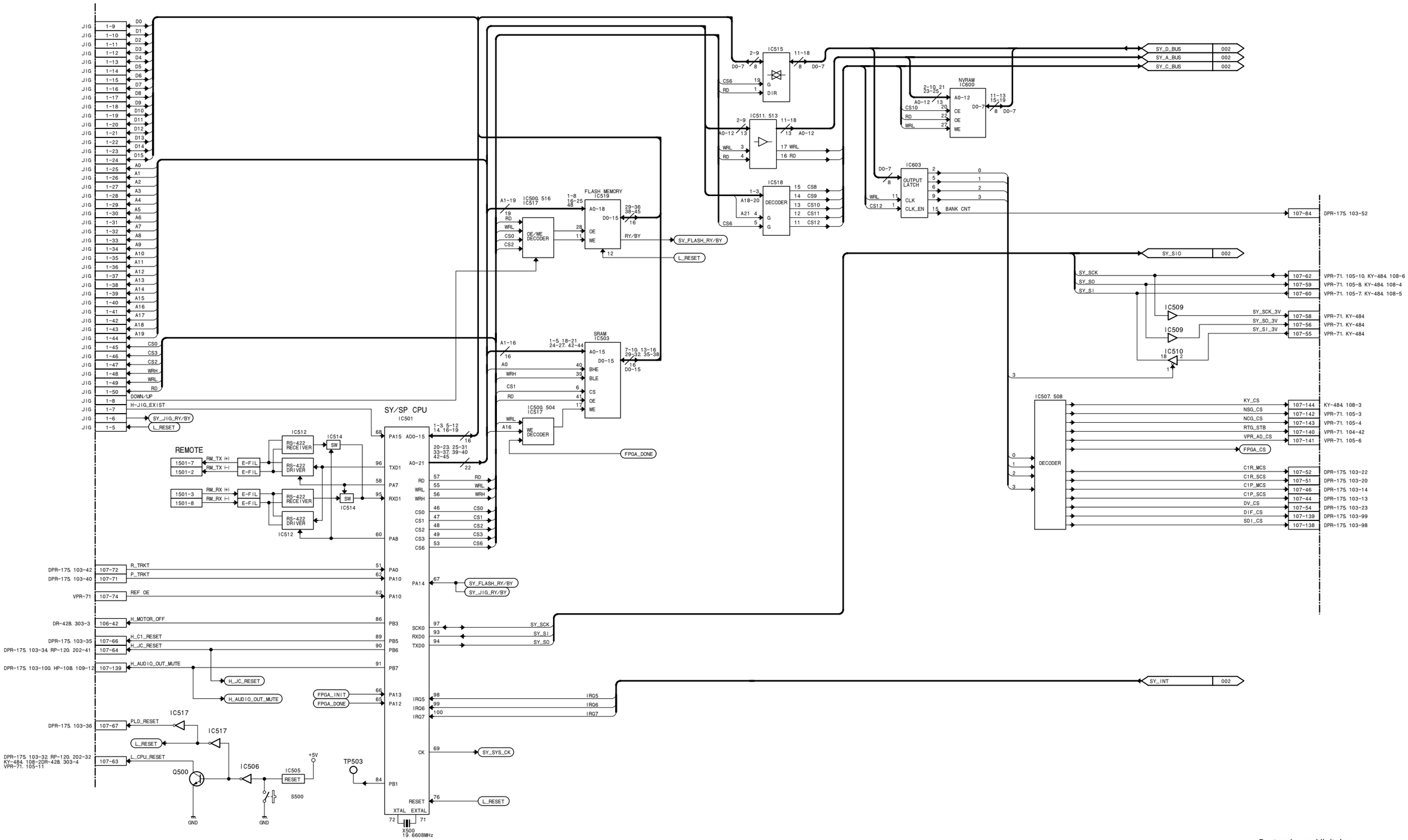

System/servo/digital process

SSP-24/24A (3/4)

LOT NO. 064-

SSP-24/24A (4/4)

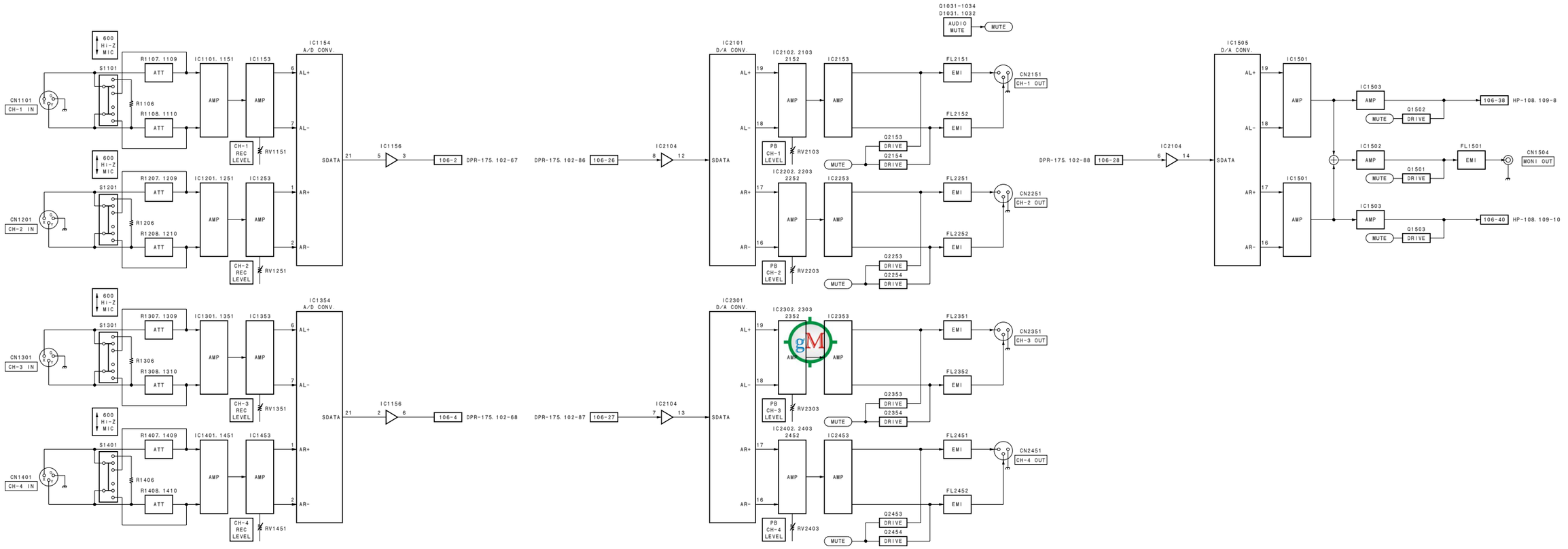

13-38

System/servo/digital process
SSP-24/24A (4/4)
LOT NO. 064-

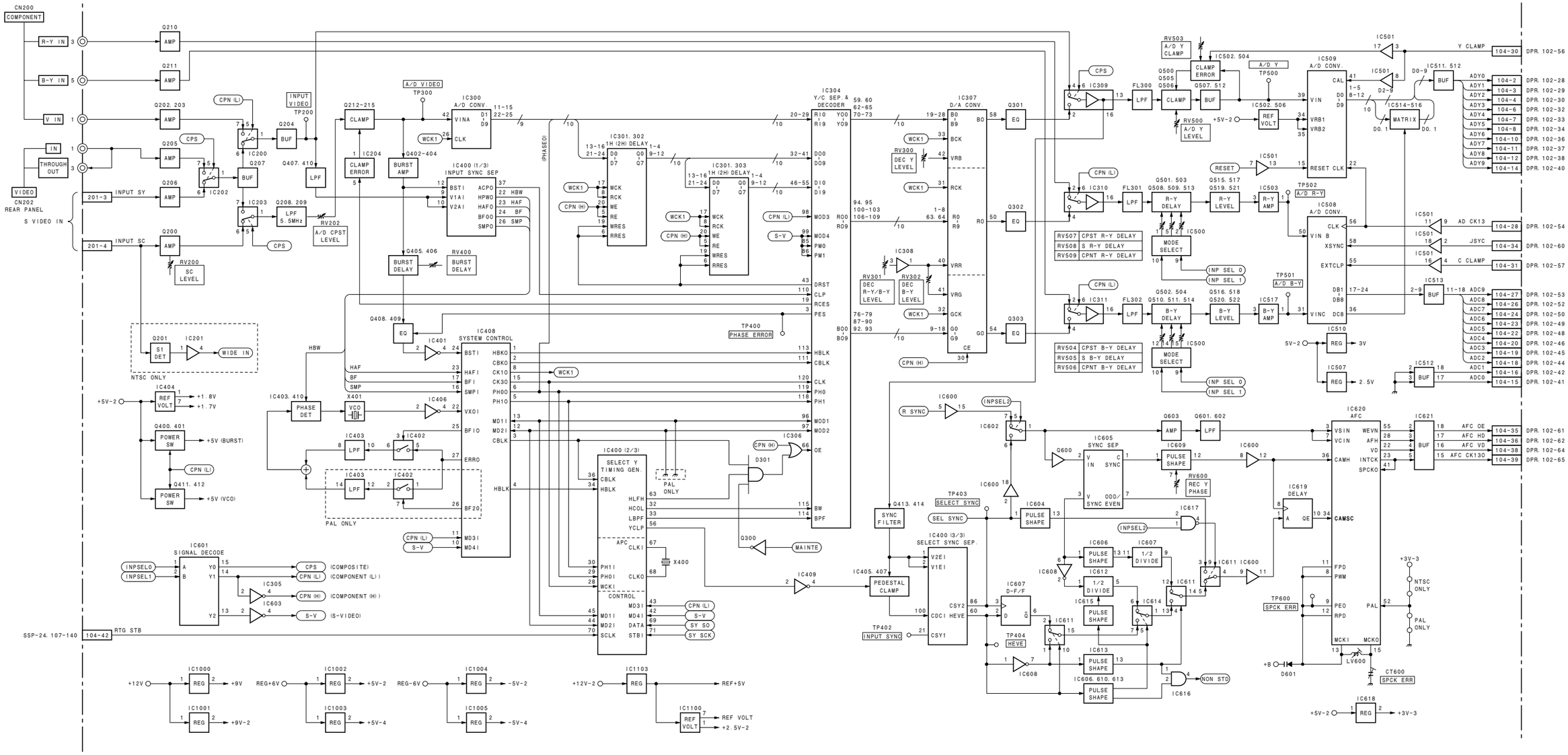

Analog video input • output process/reference

VPR-71 (1/2)

LOT NO. 064-

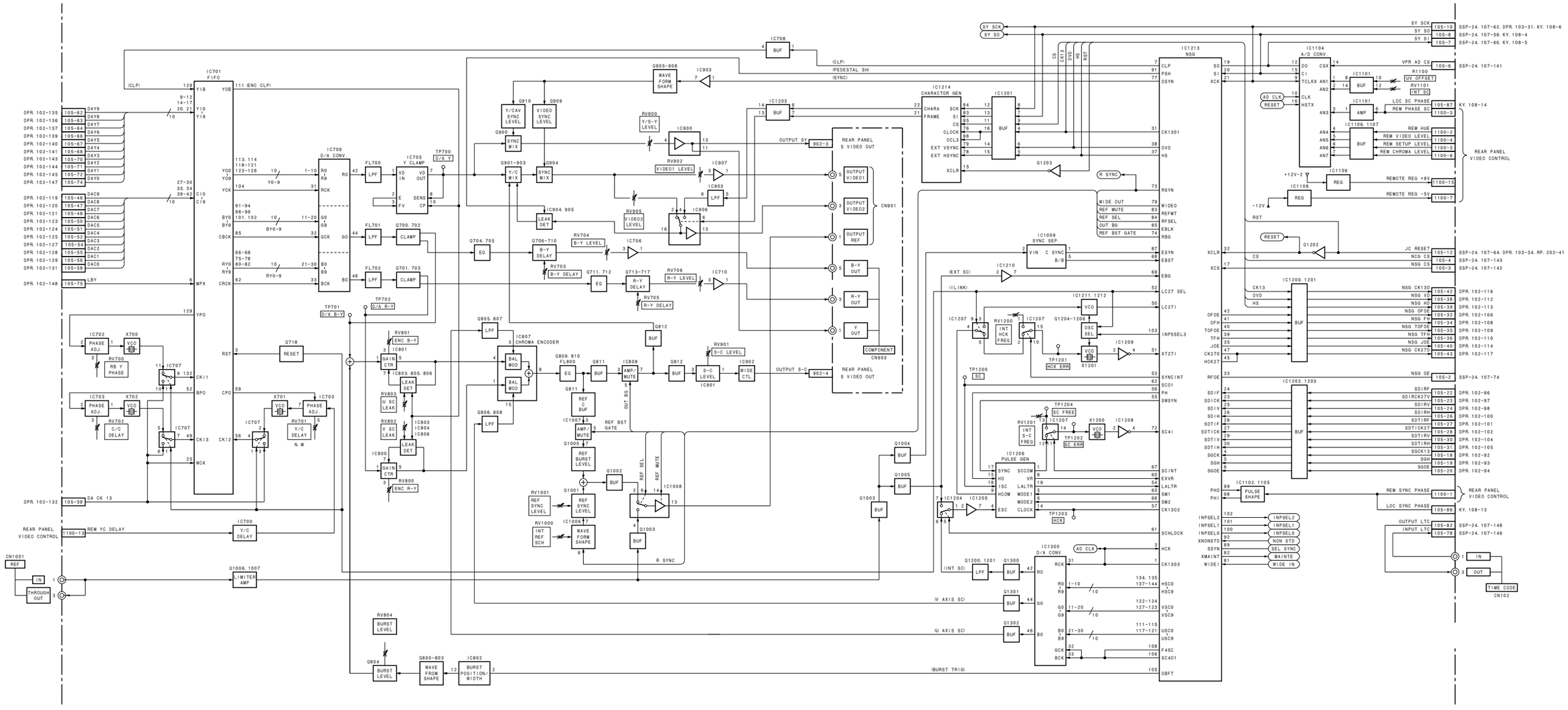

Analog video input・output process/reference

VPR-71 (2/2)

LOT NO. 064-

Index

Section 14
Board Layouts

Index

Board Name	Circuit Configuration	Page
AC-212	Line filter	14-2
CC-83	Cassette compartment mode detection/intermediate board	14-2
CC-84	Cassette compartment cassette type detection	14-2
CC-85	Cassette compartment cassette in detection	14-3
CN-1863	Sensor input/output board	14-3
CN-2021	Intermediate board between CC-84 and CC-85	14-3
CN-2022	Intermediate board between CC-83 and CC-84	14-3
DPR-175	Digital process	14-5
DR-428	Servo/mechanism control	14-8
DV-26	i.LINK/DV input/output board (Option: DSBK-1803)	14-10
DY-16	Fluorescent display board/audio meter	14-11
FU-78P	Digital process (PB)	14-12
FU-78R	Digital process (REC)	14-12
HP-108	Headphone interface	14-13
IF-820	Analog video/audio input・output process	14-15
KY-484/484A	Operation panel	14-18
MB-920	Mother board	14-20
MB-927	Mother board	14-22
PRE-45	RF PB, ATF detection	14-24
PTC-100	Search dial sensor	14-25
RP-120	RF REC/PB, ATF detection	14-27
SDI-61	SDTI (QSDI) input/output board (Option: DSBK-1802)	14-31
SDI-61A	SDTI (QSDI) output board (Option: DSBK-1602)	14-31
SDI-62	SDI, AES/EBU input/output board (Option: DSBK-1801)	14-32
SDI-62A	SDI, AES/EBU output board (Option: DSBK-1601)	14-32
SE-521	Mode sensor/tape end sensor/loading motor FG sensor	14-34
SE-522	Tape top sensor/reel position sensor (Mini/M/Standard)	14-34
SE-525	LED signal board	14-34
SE-538	Tension sensor	14-34
SSP-23	System/servo/analog audio input・output process	14-35
SSP-24/24A	System/servo/degital process	14-39
VPR-71	Analog video input・output process/reference	14-42

14-1

AC-212, CC-83, CC-84

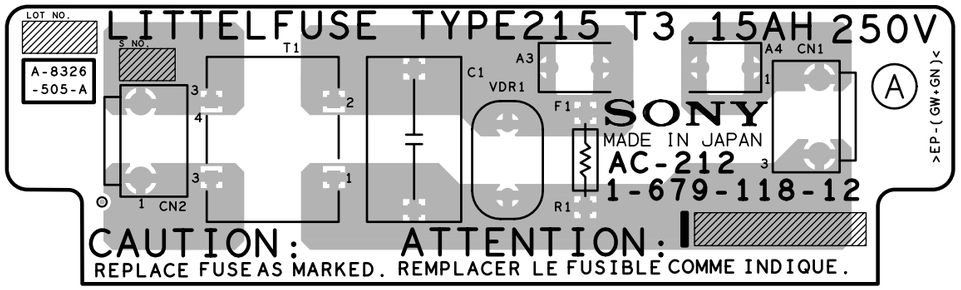

AC-212 -A SIDE-
SUFFIX: -12

AC-212 -B SIDE-
SUFFIX: -12

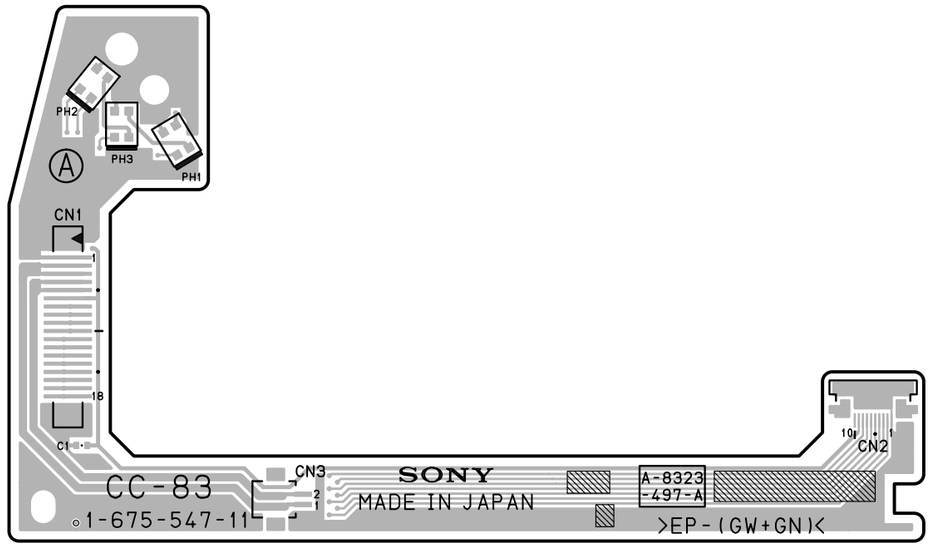

CC-83 -A SIDE-
SUFFIX: -11

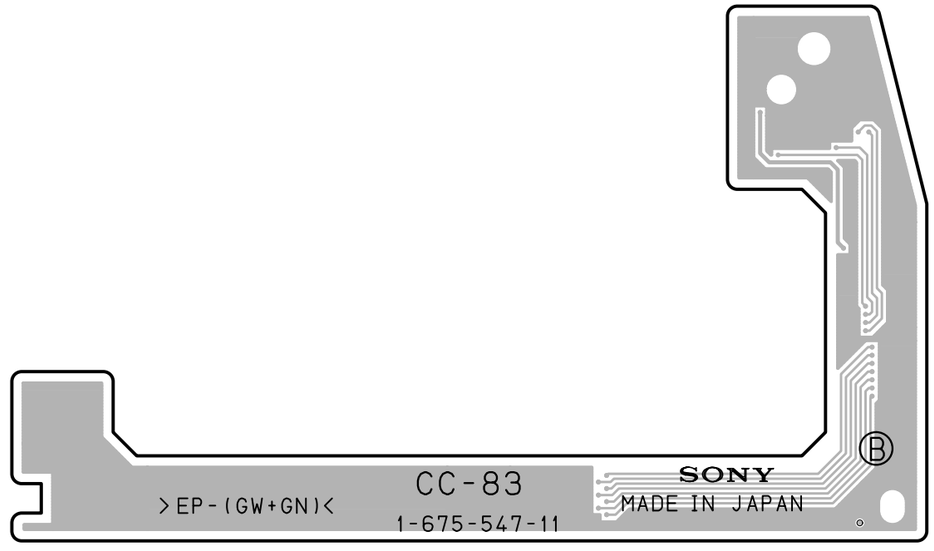

CC-83 -B SIDE-
SUFFIX: -11

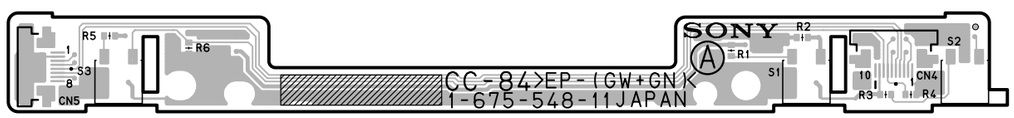

CC-84 -A SIDE-
SUFFIX: -11

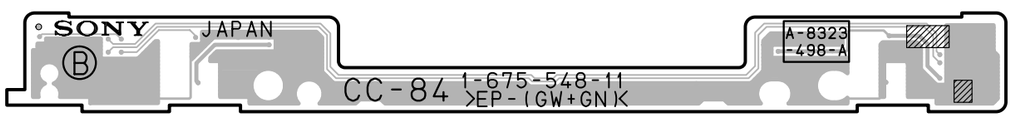

CC-84 -B SIDE-
SUFFIX: -11

14-2

http://getMANUAL.com

CC-85, CN-1863, CN-2021, CN-2022

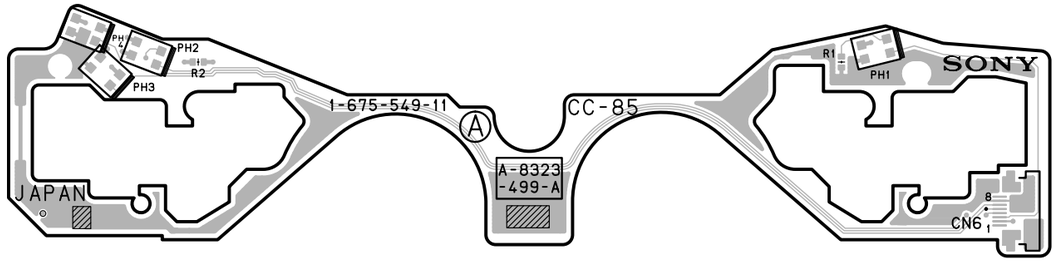

CC-85 -A SIDE-
SUFFIX: -11

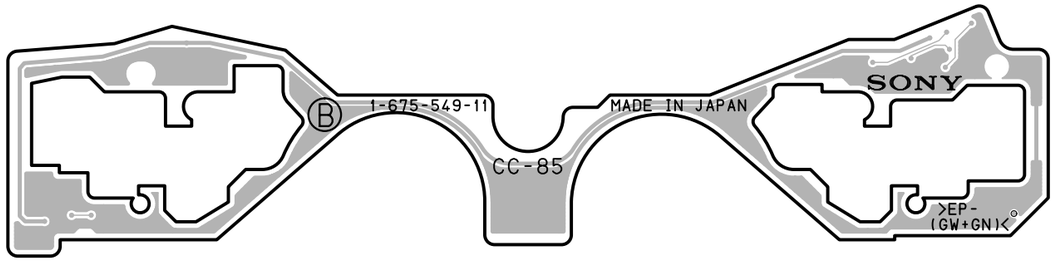

CC-85 -B SIDE-
SUFFIX: -11

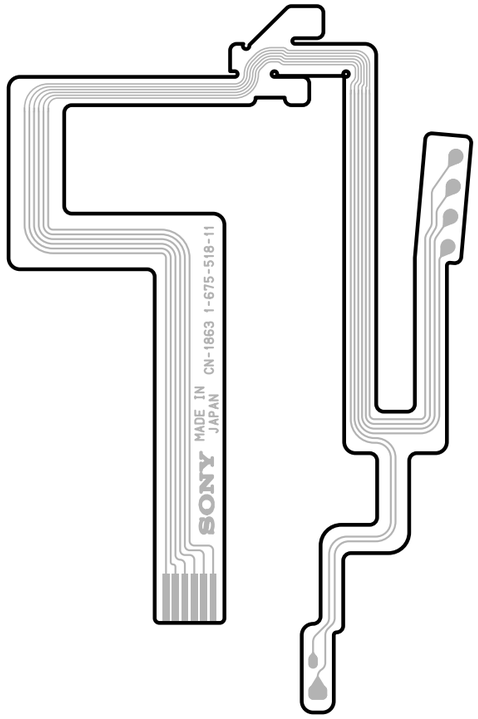

CN-1863 -A SIDE-
SUFFIX: -11

CN-2021 -A SIDE-
SUFFIX: -11

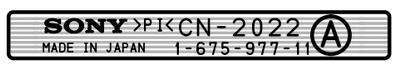

CN-2022 -A SIDE-
SUFFIX: -11

DPR-175 (1-679-111-12)

C1	*A3	C373	D2	C612	H2	C780	H2	CL904	B5	IC502	D1	LV751	G5	R103	*D6	R233	F1	R406	*E4	R619	*H5	R763	G1	R907	E1	R999	D4
C2	*A2	C374	D2	C613	*G2	C781	G5	CL905	B5	IC551	*C4	LV752	H2	R104	D5	R234	*D4	R407	*E5	R620	*H5	R764	G1	R908	E1	R1000	*D5
C3	A2	C375	D1	C614	*H2	C782	G5	CL906	B5	IC552	C2			R105	D6	R235	*D4	R408	*E4	R621	*H5	R765	G1	R909	E1	R1001	*D5
C4	*A2	C376	D4	C615	G1	C783	H2	CL907	C4	IC553	*B5	PS451	*A1	R106	*D6	R236	*D4	R409	*E4	R622	*H4	R766	G1	R910	E1	R1002	*D5
C5	*A3	C377	E4	C616	H1	C784	H2	CL908	*C5	IC554	*D3	PS452	*A1	R107	D5	R237	*D4	R411	*E2	R623	*H4	R767	G1	R911	E1	R1003	D4
C71	*B2	C378	E4	C617	*G2	C785	G5	CL909	C4	IC555	C5	PS453	*C1	R108	*D6	R238	*D4	R412	E5	R624	*H6	R768	G1	R912	E1	R1004	*F3
C72	B3	C379	D4	C618	G2	C786	H2	CL910	*C4	IC602	*G1	PS454	*C1	R109	*D6	R239	*D4	R451	*A6	R625	*H5	R769	G1	R913	E1	R1005	*F3
C73	B3	C380	D4	C620	G2	C787	*G3	CL911	F4	IC603	*H1			R110	*D6	R240	*D4	R452	*A6	R626	*H6	R770	G1	R914	E1	R1006	*F3
C74	*B3	C381	D4	C621	*H4	C788	*G3	CL912	G4	IC604	*H2	Q451	*A6	R111	*C5	R241	*D4	R453	*A6	R627	*G2	R771	G1	R915	E1	R1007	*F3
C75	B4	C382	D4	C622	*H5	C789	*G4	CL913	F4	IC605	*H1	Q452	A5	R112	*C5	R242	*D4	R454	*A6	R628	*G2	R772	G1	R916	F1	R1008	*F3
C76	*B4	C383	*E4	C623	*H5	C790	*G3	CL914	G4	IC606	*G2	Q453	A5	R151	*F4	R243	*D4	R455	A5	R629	*G2	R773	G1	R917	*C1	R1009	*F3
C77	*B3	C384	*E4	C624	*H4	C791	*G4	CL915	G1	IC607	*H4	Q454	A5	R152	*E3	R244	*D4	R456	A5	R630	*G2	R774	G1	R918	*C1	R1010	*F3
C78	*B3	C385	*E4	C625	*H4	C792	G2	CL916	G1	IC608	*H5	Q455	A5	R153	*E3	R245	*D4	R457	A5	R631	*G2	R775	G5	R919	*C1	R1011	*F3
C79	*B4	C386	*E5	C626	*H5	C793	G2	CL917	G1	IC609	*H4	Q456	A5	R154	*E3	R246	*D4	R458	A5	R632	*H4	R776	G5	R920	G1	R1012	*F3
C80	*C3	C387	D4	C627	*H4	C794	*G3	CL918	F3	IC610	*H6	Q457	A5	R155	E3	R247	*D4	R459	A5	R633	*H4	R777	H2	R921	G1	R1013	*F4
C81	*C3	C388	*E3	C628	*H5	C795	*G3			IC611	*H6	Q458	A6	R156	D1	R248	*D4	R460	A5	R634	*G2	R778	H2	R922	G1	R1014	*F4
C82	*B4	C389	*E4	C629	*H4	C796	*G4	CN1	B4	IC612	*G2	Q459	A6	R157	D1	R249	*D4	R461	A6	R651	*H5	R779	G5	R923	*C1	R1015	*F4
C83	*C3	C390	*E3	C630	*H5	C797	*G4	CN2	D5	IC613	*H2	Q460	A6	R158	D1	R250	F4	R462	A6	R652	*H5	R780	H2	R924	*C1	R1016	*F4
C84	*B4	C451	*A6	C631	*H4	C798	*G3	CN3	F4	IC614	G2	Q461	A6	R159	D1	R251	*A4	R463	A6	R653	G6	R781	G5	R925	*C1	R1017	*F4
C101	*D6	C452	*A6	C632	*H6	C799	*G3	CN11	*G4	IC615	H2	Q462	A6	R160	*F3	R252	A4	R464	A6	R654	G6	R782	H2	R926	F2	R1018	*F4
C102	D6	C453	*B6	C633	*H5	C901	*E2	CN12	*F4	IC616	G2	Q463	A6	R161	D1	R253	A4	R465	A6	R655	G6	R783	G1	R927	F2	R1019	*F4
C103	D6	C454	*B6	C634	*H6			CN21	*E3	IC617	*H5	Q464	A5	R162	E1	R254	*A3	R466	A6	R656	G6	R784	G1	R928	*F2	R1020	*F4
C104	*D6	C455	*A6	C635	*H6	CL1	A1	CN22	*D3	IC618	*H5			R163	E1	R255	*A3	R467	A5	R657	G6	R785	G1	R929	G1	R1021	*F4
C105	*D6	C456	*A6	C636	*H6	CL2	A1	CN101	B1	IC619	H4	R1	*A3	R164	E1	R256	*A3	R468	A6	R658	G6	R786	G5	R930	*G2	R1022	*F4
C106	*D6	C457	*A6	C637	H6	CL3	A3	CN102	E1	IC620	H5	R2	*A3	R165	E1	R257	*A5	R469	A6	R659	G6	R787	H2	R931	*G2	R1023	*F4
C107	E6	C458	A6	C638	*H5	CL71	B4	CN103	G1	IC621	*H4	R3	*A3	R166	E1	R258	*A5	R470	A6	R660	G6	R788	G5	R932	*G2	R1024	*F4
C108	*D6	C459	*A6	C639	*H6	CL72	B4	CN451	A6	IC622	*H6	R4	*A2	R167	E1	R259	*A5	R471	A6	R661	G6	R789	H2	R933	*H1	R1025	*F4
C109	*D6	C460	*A5	C640	*G2	CL73	C4	CN452	B6	IC623	H5	R5	*A2	R168	E1	R260	A3	R472	E6	R662	H1	R790	G5	R934	H1	R1026	*G4
C110	E6	C461	*A1	C651	G6	CL74	C4	CN453	B6	IC624	H6	R6	*A2	R169	E1	R261	A3	R473	E6	R663	*H1	R791	H2	R935	H1	R1027	*F4
C111	*D6	C462	*C1	C652	*H1	CL101	C5	CN454	*A6	IC625	*G2	R7	*A2	R170	E1	R262	*A3	R474	E6	R664	H1	R792	G5	R936	H1	R1028	*F4
C112	*D6	C463	*C1	C653	*H5	CL102	C5	CN455	*E6	IC651	H1	R8	*A3	R171	E1	R263	A4	R475	E6	R665	H1	R793	G5	R937	B5	R1029	*G4
C113	D6	C464	A1	C654	*H5	CL103	C5			IC652	G6	R9	*A3	R172	E1	R264	A4	R476	A6	R666	H1	R794	H2	R938	*B4	R1030	E2
C114	*E6	C465	C1	C655	H6	CL104	C6	D101	D5	IC653	H5	R10	*A2	R173	E1	R265	A4	R477	A6	R667	*H1	R795	H2	R939	B4	R1031	E2
C115	D5	C466	*A1	C656	*H6	CL105	C6	D351	E2	IC654	H5	R11	*A2	R174	E1	R301	B2	R478	E6	R668	*H1	R796	*G4	R940	B4	R1032	E2
C116	*D5	C467	*C1	C657	*H5	CL106	D6	D352	E3	IC655	*H4	R12	*A2	R175	E1	R302	C2	R479	E6	R669	*H1	R797	*G4	R941	B4	R1033	F2
C117	D5	C468	C1	C658	*H5	CL107	*D6	D353	D3	IC656	H4	R13	*A2	R176	E1	R303	*B2	R501	D1	R670	*H4	R798	*G4	R942	B4	R1034	E2
C118	*D6	C469	*C1	C659	*H4	CL108	*C6	D354	D3	IC657	H3	R14	*A2	R177	F3	R304	C2	R551	*D5	R671	*H5	R799	*G4	R943	B4	R1035	E2
C119	*E6	C470	A5	C660	*H5	CL151	E3	D355	D4	IC658	H2	R15	*A2	R178	*F3	R305	*C2	R552	*D5	R672	*H5	R800	*G3	R944	B4	R1036	E2
C120	*C5	C471	A5	C661	*H4	CL351	E4	D356	D4	IC751	H2	R16	*A2	R179	F2	R306	*B1	R553	D4	R673	*H4	R801	*G3	R945	B4	R1037	E2
C121	*D5	C472	*A5	C662	*H5	CL352	E4	D751	G5	IC752	G5	R17	*A2	R180	F2	R351	E3	R554	D5	R674	*H5	R802	*G3	R946	B4	R1038	E1
C122	C6	C473	E5	C663	*H5	CL353	E4	D752	H2	IC753	G5	R18	*A2	R181	F2	R352	*E2	R555	*D5	R675	*H5	R803	*G3	R947	B4	R1039	E1
C123	*C6	C474	E5	C664	*H4	CL551	B6			IC754	G3	R19	*A3	R182	F2	R353	*E2	R556	*D5	R676	*H5	R804	*G3	R948	B4	R1040	E1
C124	*C6	C475	*E5	C665	*H4	CL552	B6	E601	H1	IC755	G2	R20	*A3	R183	F2	R354	*E2	R557	D4	R677	*H5	R805	*G3	R949	B4	R1041	E1
C151	*E3	C501	*C1	C666	H3	CL553	B6	E751	G5	IC756	G2	R21	*A2	R184	F2	R355	*E2	R558	D5	R678	*H4	R806	*G3	R950	B4	R1042	E1
C152	*F3	C502	*C1	C667	*H4	CL554	B6	E752	H2	IC757	*H3	R22	*A3	R185	F2	R356	*E2	R559	*D5	R679	*H4	R807	*G3	R951	B4	R1043	E1
C153	*F2	C503	*C1	C668	*H4	CL555	B6	E901	B1	IC758	G4	R23	*A2	R186	F2	R357	D3	R560	*D5	R680	*H4	R808	*G3	R952	B4	R1044	E1
C154	*F3	C504	*C1	C669	*H4	CL556	C2	E902	E4	IC759	H3	R24	*A2	R187	F2	R358	E4	R561	D4	R681	*H5	R809	*G3	R953	B4	R1045	E1
C155	*F5	C505	*D1	C670	H4	CL557	C2	E903	*H6	IC760	*G3	R25	*A3	R188	F2	R359	E3	R562	D5	R682	*H5	R810	*G3	R954	B4		
C156	F1	C506	*D1	C671	*H4	CL558	C2			IC761	*G3	R26	*A3	R189	F2	R360	E3	R563	*D5	R683	*H4	R811	*G2	R955	B4	RB601	G2
C157	F1	C507	*D1	C672	*H4	CL559	C2	IC1	A2	IC762	*G4	R27	*A3	R190	F2	R361	E2	R564	*D4	R684	H5	R812	*G2	R956	B4		
C158	F1	C508	*D1	C673	H4	CL560	B5	IC71	*B3	IC763	*G3	R28	*A3	R191	F2	R362	E3	R565	*D4	R685	*H3	R813	*G2	R957	B4	X351	E3
C159	*F4	C509	*C1	C674	H4	CL561	B4	IC72	B3	IC764	*G4	R29	*A3	R192	F2	R363	E3	R566	D2	R686	*H4	R814	*G2	R958	B4	X651	H1
C160	F4	C510	C1	C675	*H2	CL601	*H5	IC101	D6	IC901	E2	R30	*A3	R193	F2	R364	D3	R567	*D2	R687	*H4	R815	*G3	R959	B5		
C251	*A4	C551	*C4	C676	*H2	CL602	*H4	IC102	D6			R31	*A3	R194	F2	R365	*D3	R568	*C4	R688	*H4	R816	*G3	R960	B5	*:B SIDE	
C252	*A4	C552	D4	C677	H2	CL603	*H4	IC103	D6	L1	*A2	R32	*A3	R195	F2	R366	E3	R569	B5	R689	*H4	R817	*G3	R961	B5		
C253	*A5	C553	C4	C678	H2	CL604	*H4	IC104	*E6	L71	*B2	R33	*A3	R196	F2	R367	D3	R570	C5	R690	*H4	R818	*G2	R962	B5		
C254	*A4	C554	*C4	C679	*H3	CL605	*H4	IC105	D6	L72	*B4	R34	*A3	R197	F2	R368	D3	R571	*C5	R691	*H4	R819	*G4	R963	B5		
C255	*A5	C555	C4	C680	*H3	CL651	H1	IC106	C5	L101	*D6	R35	*A3	R198	F2	R369	D3	R572	*C5	R692	*H4	R820	*G4	R964	B5		
C256	A5	C556	*C4	C681	*H2	CL652	*H5	IC151	*F3	L102	C6	R36	*A2	R199	F2	R370	E3	R573	*C5	R693	*H4	R821	*G4	R965	B5		
C257	*A4	C557	*C6	C682	*H3	CL653	*H5	IC152	*F2	L151	*F3	R37	*A2	R200	F2	R371	*E3	R574	*C5	R694	*H4	R822	*G3	R966	B5		
C258	*A4	C558	*C5	C683	*H2	CL654	*H5	IC153	F3	L152	*F2	R38	*A3	R201	*F5	R372	D3	R575	*C5	R695	*H4	R823	*G3	R967	B5		
C301	*B2	C559	*C2	C684	*H3	CL655	*H5	IC154	E3	L153	F4	R39	A2	R202	*F4	R373	*E3	R576	C4	R696	*H4	R824	G1	R968	B5		
C302	*B1	C560	*C3	C685	*H2	CL656	*H5	IC155	*F5	L251	A5	R40	A2	R203	*F4	R374	D2	R577	*C5	R697	*H4	R825	*G3	R969	B5		
C303	*B2	C561	B6	C751	G5	CL657	*H4	IC156	F2	L301	*B2	R41	*A2	R204	*F4	R375	D2	R578	*C5	R698	*H4	R826	*G3	R970	B5		
C304	*B2	C562	*B6	C752	G5	CL658	H4	IC157	*F4	L351	E2	R42	*A2	R205	*F4	R376	D2	R579	*C5	R699	*H4	R827	E1	R971	B5		
C305	*C2	C563	*C2	C753	G5	CL659	H4	IC158	F2	L352	E3	R43	A2	R206	*F4	R377	D2	R580	C4	R700	*H4	R828	E1	R972	B5		
C306	*B2	C564	*C2	C754	G5	CL660	*H4	IC159	F2	L353	D3	R44	A2	R207	*F4	R378	D2	R581	*C6	R701	H4	R829	E1	R973	B5		
C307	B2	C565	*C2	C755	F3	CL661	*H4	IC251	A4	L354	D2	R45	A2	R208	F1	R379	D2	R582	*C2	R702	*H2	R830	*G3	R974	B5		
C308	*B2	C566	*D2	C756	*F3	CL662	*H4	IC252	*A4	L355	D1	R46	A2	R209	F1	R380	D2	R583	*B5	R703	*H2	R831	*G3	R975	B5		
C309	*B2	C567	*D2	C757	G4	CL663	*H4	IC301	B2	L356	D4	R47	A2	R210	F1	R381	D2	R584	C5	R704	*H3	R832	*G3	R976	*D4		
C351	E3	C568	*C3	C758	H3	CL664	*H3	IC302	*B2	L357	D4	R48	A2	R211	F1	R382	D2	R585	*B5	R705	*H3	R833	*G3	R977	*D5		
C352	E3	C569	*C3	C759	G2	CL665	*H4	IC351	E3	L451	*A6	R49	A2	R212	F1	R383	D2	R586	*C5	R706	*H2	R834	*G3	R978	*D5		
C353	E3	C570	*C2	C760	G2	CL666	*H4	IC352	*E2	L452	C1	R50	A2	R213	F1	R385	D2	R587	C2	R707	*H2	R835	*G3	R979	*D5		
C354	*E2	C571	*B6	C761	G5	CL667	*H4	IC353	E3	L453	A5	R51	A2	R214	F1	R386	D2	R588	B5	R708	*H2	R836	*G4	R980	*D5		
C355	E2	C572	*B5	C762	H2	CL668	*H4	IC354	E3	L454	E5	R52	A2	R215	*F4	R387	*D3	R601	*G1	R709	*H2	R837	*G4	R981	*D5		
C356	E3	C573	*B5	C763	G5	CL669	*H4	IC355	D2	L501	*C1	R53	A2	R216	*F4	R388	*E3	R602	*G1	R710	*H2	R838	*G4	R982	*D5		
C357	E3	C574	*C4	C764	H2	CL670	H3	IC356	D2	L551	D4	R54	A2	R217	*F4	R389	*E3	R603	*G2	R711	*H2	R839	*G4	R983	D4		
C358	E2	C575	*C5	C765	*G4	CL671	H4	IC357	E4	L552	*D3	R55	A2	R218	*F4	R390	*E3	R604	*H2	R712	*H2	R840	*G2	R984	D4		
C359	E3	C576	*B4	C766	*H3	CL672	*H3	IC358	E4	L553	*B6	R56	A2	R219	F1	R391	*E3	R605	*H2	R713	*H2	R841	*G2	R985	D4		
C360	E2	C577	*C5	C767	*G4	CL673	*H3	IC360	*D3	L601	*H1	R57	A2	R220	F1	R392	D3	R606	G1	R714	H2	R842	*G2	R986	D4		
C361	E3	C578	*C6	C768	*H3	CL674	*H3	IC361	E4	L602	*H4	R58	A2	R221	F1	R394	D4	R607	H1	R751	G5	R843	*G2	R987	D4		
C362	E3	C601	*H2	C769	*G5	CL675	*H3	IC362	*D3	L603	*H4	R59	A2	R222	F1	R395	D4	R608	G1	R752	G5	R844	G2	R988	D4		
C363	D3	C602	*G2	C770	*H3	CL676	H2	IC451	B6	L604	*H5	R60	*A2	R223	F1	R396	D4	R609	*G2	R753	G4	R845	G4	R989	D4		
C364	D3	C603	*H2	C771	*G4	CL677	H2	IC452	B6	L605	*H6	R61	*A3	R224	F1	R397	E4	R610	H1	R754	G4	R846	G4	R990	D4		
C365	D3	C604	*G2	C772	*H3	CL751	G3	IC453	A6	L651	H6	R71	*B3	R225	F1	R398	E4	R611	*H2	R755	G4	R847	G3	R991	D4		
C366	D3	C605	*G2	C773	G5	CL752	G3	IC454	A6	L652	*H3	R72	*B3	R226	F1	R399	E4	R612	G2	R756	G2	R848	G4	R992	D4		
C367	D3	C606	*H2	C774	H2	CL754	G3	IC455	A5	L653	*H2	R73	*C3	R227	F1	R400	D4	R613	H2	R757	G4	R901	E1	R993	D4		
C368	*E3	C607	*H1	C775	*G5	CL755	G4	IC456	*A6	L751	*G5	R74	B4	R228	F1	R401	D4	R614	H2	R758	*G2	R902	E1	R994	D4		
C369	*E3	C608	*H1	C776	*H3	CL756	G4	IC457	A6	L752	*F3	R75	B5	R229	F1	R402	*E5	R615	*H5	R759	*G2	R903	E1	R995	D4		
C370	*D3	C609	*G1	C777	*G4	CL901	E1	IC458	*E6	L753	*G4	R76	B4	R230	F1	R403	E4	R616	*H5	R760	G1	R904	E1	R996	D4		
C371	*D4	C610	H1	C778	*H3	CL902	E1	IC459	E6			R101	*D6	R231	F1	R404	*E4	R617	*H5	R761	G1	R905	E1	R997	D4		
C372	D3	C611	G2	C779	G5	CL903	B5	IC501	C1	LV101	D6	R102	*D6	R232	F1	R405	*E4	R618	*H5	R762	G1	R906	E1	R998	D4		

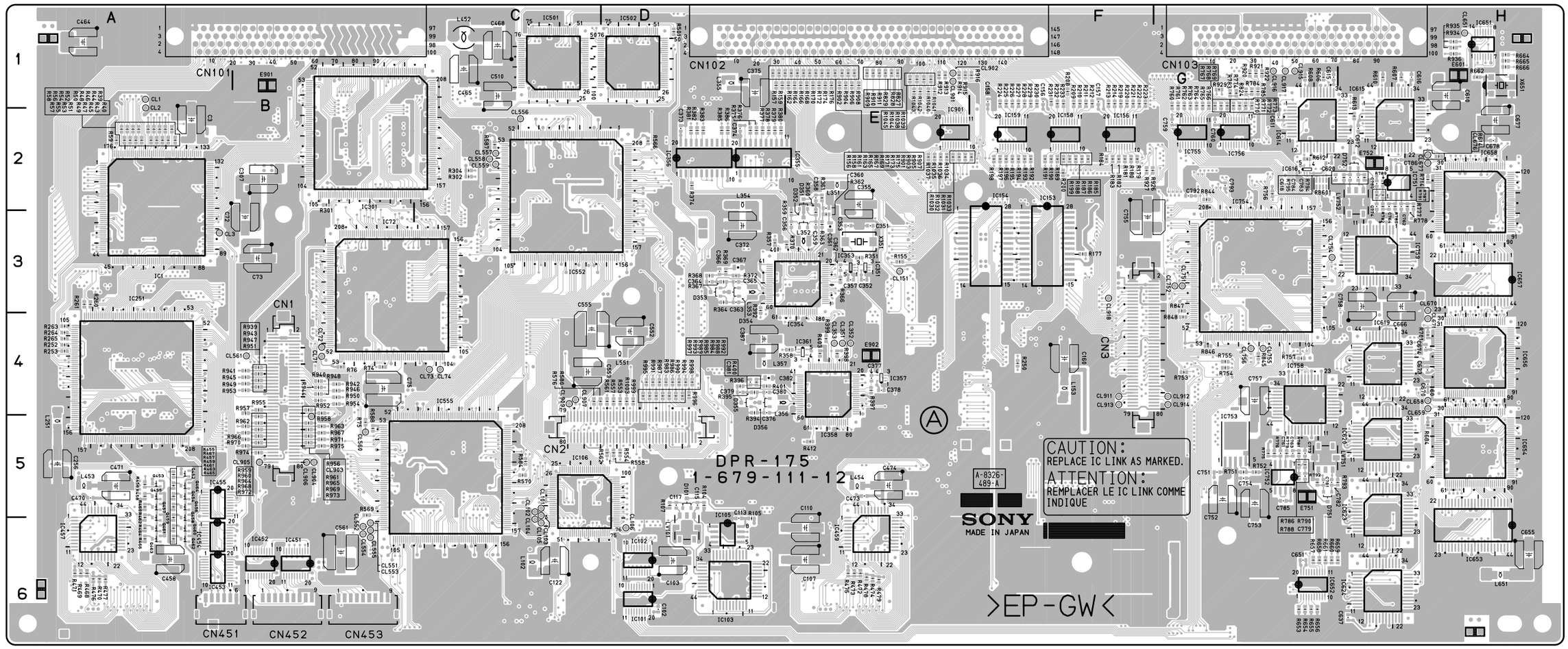

DPR-175 -A SIDE-

SUFFIX: -12

FOR DSR-1800/P

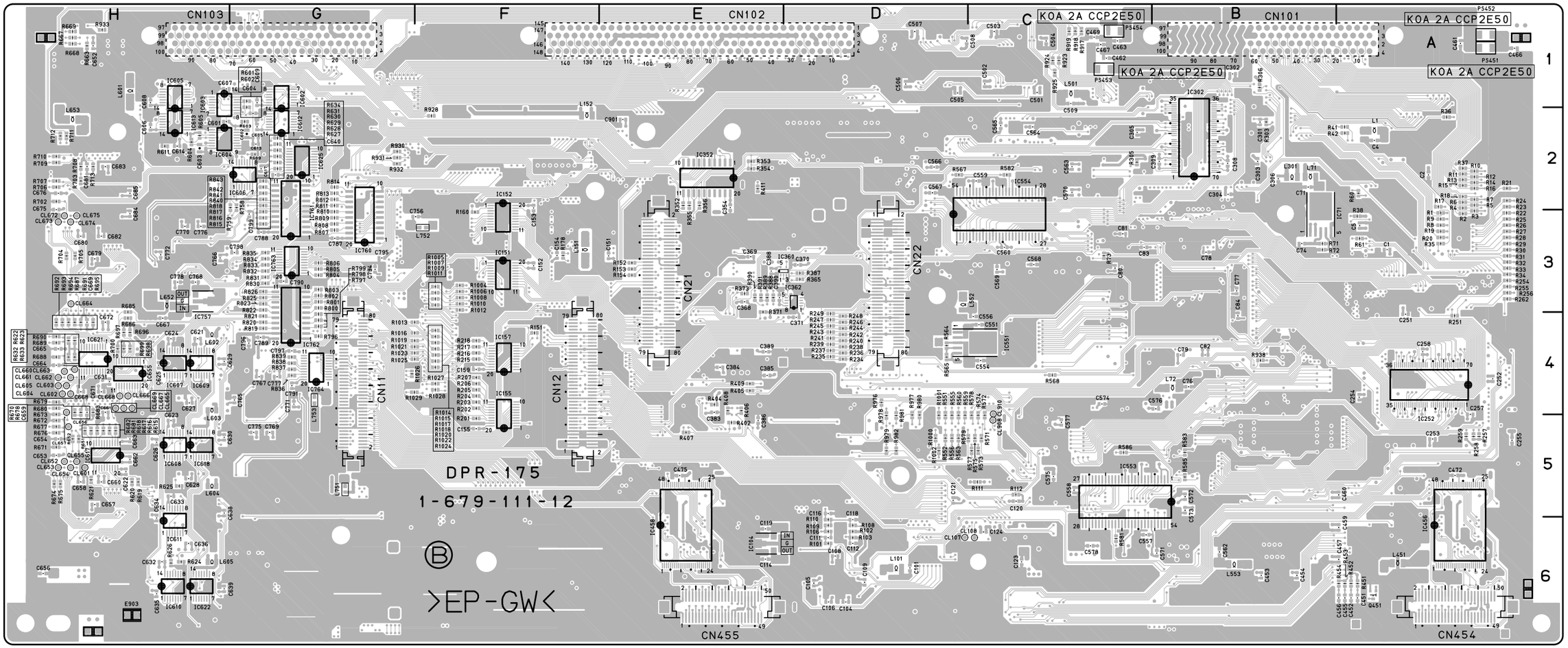

DPR-175 -B SIDE-

SUFFIX: -12

FOR DSR-1800/P

DPR-175 (1-679-111-11)

C1	*A3	C373	D2	C612	H2	C780	H2	CL904	B5	IC502	D1	LV751	G5	R103	*D6	R233	F1	R404	*E4	R616	*H5	R760	G1	R906	E1	R998	D4
C2	*A2	C374	D2	C613	*G2	C781	G5	CL905	B5	IC551	*C4	LV752	H2	R104	D5	R234	*D4	R405	*E4	R617	*H5	R761	G1	R907	E1	R999	D4
C3	A2	C375	D1	C614	*H2	C782	G5	CL906	B5	IC552	C2			R105	D6	R235	*D4	R406	*E4	R618	*H5	R762	G1	R908	E1	R1000	*D5
C4	*A2	C376	D4	C615	G1	C783	H2	CL907	C4	IC553	*B5	PS451	*A1	R106	*D6	R236	*D4	R407	*E5	R619	*H5	R763	G1	R909	E1	R1001	*D5
C5	*A3	C377	E4	C616	H1	C784	H2	CL908	*C5	IC554	*D3	PS452	*A1	R107	D5	R237	*D4	R408	*E4	R620	*H5	R764	G1	R910	E1	R1002	*D5
C71	*B2	C378	E4	C617	*G2	C785	G5	CL909	C4	IC555	C5	PS453	*C1	R108	*D6	R238	*D4	R409	*E4	R621	*H5	R765	G1	R911	E1	R1003	D4
C72	B3	C379	D4	C618	G2	C786	H2	CL910	*C4	IC602	*G1	PS454	*C1	R109	*D6	R239	*D4	R410	*E2	R622	*H4	R766	G1	R912	E1	R1004	*F3
C73	B3	C380	D4	C620	G2	C787	*G3	CL911	F4	IC603	*H1			R110	*D6	R240	*D4	R411	*E2	R623	*H4	R767	G1	R913	E1	R1005	*F3
C74	*B3	C381	D4	C621	*H4	C788	*G3	CL912	G4	IC604	*H2	Q451	*A6	R111	*C5	R241	*D4	R412	E5	R624	*H6	R768	G1	R914	E1	R1006	*F3
C75	B4	C382	D4	C622	*H5	C789	*G4	CL913	F4	IC605	*H1	Q452	A5	R112	*C5	R242	*D4	R451	*A6	R625	*H5	R769	G1	R915	E1	R1007	*F3
C76	*B4	C383	*E4	C623	*H5	C790	*G3	CL914	G4	IC606	*G2	Q453	A5	R151	*F4	R243	*D4	R452	*A6	R626	*H6	R770	G1	R916	F1	R1008	*F3
C77	*B3	C384	*E4	C624	*H4	C791	*G4	CL915	G1	IC607	*H4	Q454	A5	R152	*E3	R244	*D4	R453	*A6	R627	*G2	R771	G1	R917	*C1	R1009	*F3
C78	*B3	C385	*E4	C625	*H4	C792	G2	CL916	G1	IC608	*H5	Q455	A5	R153	*E3	R245	*D4	R454	*A6	R628	*G2	R772	G1	R918	*C1	R1010	*F3
C79	*B4	C386	*E5	C626	*H5	C793	G2	CL917	G1	IC609	*H4	Q456	A5	R154	*E3	R246	*D4	R455	A5	R629	*G2	R773	G1	R919	*C1	R1011	*F3
C80	*C3	C387	D4	C627	*H4	C794	*G3	CL918	F3	IC610	*H6	Q457	A5	R155	E3	R247	*D4	R456	A5	R630	*G2	R774	G1	R920	G1	R1012	*F3
C81	*C3	C388	*E3	C628	*H5	C795	*G3			IC611	*H6	Q458	A6	R156	D1	R248	*D4	R457	A5	R631	*G2	R775	G5	R921	G1	R1013	*F4
C82	*B4	C389	*E4	C629	*H4	C796	*G4	CN1	B4	IC612	*G2	Q459	A6	R157	D1	R249	*D4	R458	A5	R632	*H4	R776	G5	R922	G1	R1014	*F4
C83	*C3	C390	*E3	C630	*H5	C797	*G4	CN2	D5	IC613	*H2	Q460	A6	R158	D1	R250	F4	R459	A5	R633	*H4	R777	H2	R923	*C1	R1015	*F4
C84	*B4	C451	*A6	C631	*H4	C798	*G3	CN3	F4	IC614	G2	Q461	A6	R159	D1	R251	*A4	R460	A5	R634	*G2	R778	H2	R924	*C1	R1016	*F4
C101	*D6	C452	*A6	C632	*H6	C799	*G3	CN11	*G4	IC615	H2	Q462	A6	R160	*F3	R252	A4	R461	A6	R651	*H5	R779	G5	R925	*C1	R1017	*F4
C102	D6	C453	*B6	C633	*H5	C901	*E2	CN12	*F4	IC616	G2	Q463	A6	R161	D1	R253	A4	R462	A6	R652	*H5	R780	H2	R926	F2	R1018	*F4
C103	D6	C454	*B6	C634	*H6			CN21	*E3	IC617	*H5	Q464	A5	R162	E1	R254	*A3	R463	A6	R653	G6	R781	G5	R927	F2	R1019	*F4
C104	*D6	C455	*A6	C635	*H6	CL1	A1	CN22	*D3	IC618	*H5			R163	E1	R255	*A3	R464	A6	R654	G6	R782	H2	R928	*F2	R1020	*F4
C105	*D6	C456	*A6	C636	*H6	CL2	A1	CN101	B1	IC619	H4	R1	*A3	R164	E1	R256	*A3	R465	A6	R655	G6	R783	G1	R929	G1	R1021	*F4
C106	*D6	C457	*A6	C637	H6	CL3	A3	CN102	E1	IC620	H5	R2	*A3	R165	E1	R257	*A5	R466	A6	R656	G6	R784	G1	R930	*G2	R1022	*F4
C107	E6	C458	A6	C638	*H5	CL71	B4	CN103	G1	IC621	*H4	R3	*A3	R166	E1	R258	*A5	R467	A5	R657	G6	R785	G1	R931	*G2	R1023	*F4
C108	*D6	C459	*A6	C639	*H6	CL72	B4	CN451	A6	IC622	*H6	R4	*A2	R167	E1	R259	*A5	R468	A6	R658	G6	R786	G5	R932	*G2	R1024	*F4
C109	*D6	C460	*A5	C640	*G2	CL73	C4	CN452	B6	IC623	H5	R5	*A2	R168	E1	R260	A3	R469	A6	R659	G6	R787	H2	R933	*H1	R1025	*F4
C110	E6	C461	*A1	C651	G6	CL74	C4	CN453	B6	IC624	H6	R6	*A2	R169	E1	R261	A3	R470	A6	R660	G6	R788	G5	R934	H1	R1026	*G4
C111	*D6	C462	*C1	C652	*H1	CL101	C5	CN454	*A6	IC625	*G2	R7	*A2	R170	E1	R262	*A3	R471	A6	R661	G6	R789	H2	R935	H1	R1027	*F4
C112	*D6	C463	*C1	C653	*H5	CL102	C5	CN455	*E6	IC651	H1	R8	*A3	R171	E1	R263	A4	R472	E6	R662	H1	R790	G5	R936	H1	R1028	*F4
C113	D6	C464	A1	C654	*H5	CL103	C5			IC652	G6	R9	*A3	R172	E1	R264	A4	R473	E6	R663	*H1	R791	H2	R937	B5	R1029	*G4
C114	*E6	C465	C1	C655	H6	CL104	C6	D101	D5	IC653	H5	R10	*A2	R173	E1	R265	A4	R474	E6	R664	H1	R792	G5	R938	*B4	R1030	E2
C115	D5	C466	*A1	C656	*H6	CL105	C6	D351	E2	IC654	H5	R11	*A2	R174	E1	R301	B2	R475	E6	R665	H1	R793	G5	R939	B4	R1031	E2
C116	*D5	C467	*C1	C657	*H5	CL106	D6	D352	E3	IC655	*H4	R12	*A2	R175	E1	R302	C2	R476	A6	R666	H1	R794	H2	R940	B4	R1032	E2
C117	D5	C468	C1	C658	*H5	CL107	*D6	D353	D3	IC656	H4	R13	*A2	R176	E1	R303	*B2	R477	A6	R667	*H1	R795	H2	R941	B4	R1033	F2
C118	*D6	C469	*C1	C659	*H4	CL108	*C6	D354	D3	IC657	H3	R14	*A2	R177	F3	R304	C2	R478	E6	R668	*H1	R796	*G4	R942	B4	R1034	E2
C119	*E6	C470	A5	C660	*H5	CL151	E3	D355	D4	IC658	H2	R15	*A2	R178	*F3	R305	*C2	R479	E6	R669	*H1	R797	*G4	R943	B4	R1035	E2
C120	*C5	C471	A5	C661	*H4	CL351	E4	D356	D4	IC751	H2	R16	*A2	R179	F2	R306	*B1	R501	D1	R670	*H4	R798	*G4	R944	B4	R1036	E2
C121	*D5	C472	*A5	C662	*H5	CL352	E4	D751	G5	IC752	G5	R17	*A2	R180	F2	R351	E3	R551	*D5	R671	*H5	R799	*G4	R945	B4	R1037	E2
C122	C6	C473	E5	C663	*H5	CL353	E4	D752	H2	IC753	G5	R18	*A2	R181	F2	R352	*E2	R552	*D5	R672	*H5	R800	*G3	R946	B4	R1038	E1
C123	*C6	C474	E5	C664	*H4	CL551	B6			IC754	G3	R19	*A3	R182	F2	R353	*E2	R553	D4	R673	*H4	R801	*G3	R947	B4	R1039	E1
C124	*C6	C475	*E5	C665	*H4	CL552	B6	E601	H1	IC755	G2	R20	*A3	R183	F2	R354	*E2	R554	D5	R674	*H5	R802	*G3	R948	B4	R1040	E1
C151	*E3	C501	*C1	C666	H3	CL553	B6	E751	G5	IC756	G2	R21	*A2	R184	F2	R355	*E2	R555	*D5	R675	*H5	R803	*G3	R949	B4	R1041	E1
C152	*F3	C502	*C1	C667	*H4	CL554	B6	E752	H2	IC757	*H3	R22	*A3	R185	F2	R356	*E2	R556	*D5	R676	*H5	R804	*G3	R950	B4	R1042	E1
C153	*F2	C503	*C1	C668	*H4	CL555	B6	E901	C6	IC758	G4	R23	*A2	R186	F2	R357	D3	R557	D4	R677	*H5	R805	*G3	R951	B4	R1043	E1
C154	*F3	C504	*C1	C669	*H4	CL556	C2	E902	E6	IC759	H3	R24	*A2	R187	F2	R358	E4	R558	D5	R678	*H4	R806	*G3	R952	B4	R1044	E1
C155	*F5	C505	*D1	C670	H4	CL557	C2	E903	H6	IC760	*G3	R25	*A3	R188	F2	R359	E3	R559	*D5	R679	*H4	R807	*G3	R953	B4	R1045	E1
C156	F1	C506	*D1	C671	*H4	CL558	C2			IC761	*G3	R26	*A3	R189	F2	R360	E3	R560	*D5	R680	*H4	R808	*G3	R954	B4		
C157	F1	C507	*D1	C672	*H4	CL559	C2	IC1	A2	IC762	*G4	R27	*A3	R190	F2	R361	E2	R561	D4	R681	*H5	R809	*G3	R955	B4	RB601	G2
C158	F1	C508	*D1	C673	H4	CL560	B5	IC71	*B3	IC763	*G3	R28	*A3	R191	F2	R362	E3	R562	D5	R682	*H5	R810	*G3	R956	B4		
C159	*F4	C509	*C1	C674	H4	CL561	B4	IC72	B3	IC764	*G4	R29	*A3	R192	F2	R363	E3	R563	*D5	R683	*H4	R811	*G2	R957	B4	X351	E3
C160	F4	C510	C1	C675	*H2	CL601	*H5	IC101	D6	IC901	E2	R30	*A3	R193	F2	R364	D3	R564	*D4	R684	H5	R812	*G2	R958	B4	X651	H1
C251	*A4	C551	*C4	C676	*H2	CL602	*H4	IC102	D6			R31	*A3	R194	F2	R365	*D3	R565	*D4	R685	*H3	R813	*G2	R959	B5		
C252	*A4	C552	D4	C677	H2	CL603	*H4	IC103	D6	L1	*A2	R32	*A3	R195	F2	R366	E3	R566	D2	R686	*H4	R814	*G2	R960	B5	*:B SIDE	
C253	*A5	C553	C4	C678	H2	CL604	*H4	IC104	*E6	L71	*B2	R33	*A3	R196	F2	R367	D3	R567	*D2	R687	*H4	R815	*G3	R961	B5		
C254	*A4	C554	*C4	C679	*H3	CL605	*H4	IC105	D6	L72	*B4	R34	*A3	R197	F2	R368	D3	R568	*C4	R688	*H4	R816	*G3	R962	B5		
C255	*A5	C555	C4	C680	*H3	CL651	H1	IC106	C5	L101	*D6	R35	*A3	R198	F2	R369	D3	R569	B5	R689	*H4	R817	*G3	R963	B5		
C256	A5	C556	*C4	C681	*H2	CL652	*H5	IC151	*F3	L102	C6	R36	*A2	R199	F2	R370	E3	R570	C5	R690	*H4	R818	*G2	R964	B5		
C257	*A4	C557	*C6	C682	*H3	CL653	*H5	IC152	*F2	L151	*F3	R37	*A2	R200	F2	R371	*E3	R571	*C5	R691	*H4	R819	*G4	R965	B5		
C258	*A4	C558	*C5	C683	*H2	CL654	*H5	IC153	F3	L152	*F2	R38	*A3	R201	*F5	R372	D3	R572	*C5	R692	*H4	R820	*G4	R966	B5		
C301	*B2	C559	*C2	C684	*H3	CL655	*H5	IC154	E3	L153	F4	R39	A2	R202	*F4	R373	*E3	R573	*C5	R693	*H4	R821	*G4	R967	B5		
C302	*B1	C560	*C3	C685	*H2	CL656	*H5	IC155	*F5	L251	A5	R40	A2	R203	*F4	R374	D2	R574	*C5	R694	*H4	R822	*G3	R968	B5		
C303	*B2	C561	B6	C751	G5	CL657	*H4	IC156	F2	L301	*B2	R41	*A2	R204	*F4	R375	D2	R575	*C5	R695	*H4	R823	*G3	R969	B5		
C304	*B2	C562	*B6	C752	G5	CL658	H4	IC157	*F4	L351	E2	R42	*A2	R205	*F4	R376	D2	R576	C4	R696	*H4	R824	G1	R970	B5		
C305	*C2	C563	*C2	C753	G5	CL659	H4	IC158	F2	L352	E3	R43	A2	R206	*F4	R377	D2	R577	*C5	R697	*H4	R825	*G3	R971	B5		
C306	*B2	C564	*C2	C754	G5	CL660	*H4	IC159	F2	L353	D3	R44	A2	R207	*F4	R378	D2	R578	*C5	R698	*H4	R826	*G3	R972	B5		
C307	B2	C565	*C2	C755	F3	CL661	*H4	IC251	A4	L354	D2	R45	A2	R208	F1	R379	D2	R579	*C5	R699	*H4	R827	E1	R973	B5		
C308	*B2	C566	*D2	C756	*F3	CL662	*H4	IC252	*A4	L355	D1	R46	A2	R209	F1	R380	D2	R580	C4	R700	*H4	R828	E1	R974	B5		
C309	*B2	C567	*D2	C757	G4	CL663	*H4	IC301	B2	L356	D4	R47	A2	R210	F1	R381	D2	R581	*C6	R701	H4	R829	E1	R975	B5		
C351	E3	C568	*C3	C758	H3	CL664	*H3	IC302	*B2	L357	D4	R48	A2	R211	F1	R382	D2	R582	*C2	R702	*H2	R830	*G3	R976	*D4		
C352	E3	C569	*C3	C759	G2	CL665	*H4	IC351	E3	L451	*A6	R49	A2	R212	F1	R383	D2	R583	*B5	R703	*H2	R831	*G3	R977	*D5		
C353	E3	C570	*C2	C760	G2	CL666	*H4	IC352	*E2	L452	C1	R50	A2	R213	F1	R384	D2	R584	C5	R704	*H3	R832	*G3	R978	*D5		
C354	*E2	C571	*B6	C761	G5	CL667	*H4	IC353	E3	L453	A5	R51	A2	R214	F1	R385	D2	R585	*B5	R705	*H3	R833	*G3	R979	*D5		
C355	E2	C572	*B5	C762	H2	CL668	*H4	IC354	E3	L454	E5	R52	A2	R215	*F4	R386	D2	R586	*C5	R706	*H2	R834	*G3	R980	*D5		
C356	E3	C573	*B5	C763	G5	CL669	*H4	IC355	D2	L501	*C1	R53	A2	R216	*F4	R387	*D3	R587	C2	R707	*H2	R835	*G3	R981	*D5		
C357	E3	C574	*C4	C764	H2	CL670	H3	IC356	D2	L551	D4	R54	A2	R217	*F4	R388	*E3	R588	B5	R708	*H2	R836	*G4	R982	*D5		
C358	E2	C575	*C5	C765	*G4	CL671	H4	IC357	E4	L552	*D3	R55	A2	R218	*F4	R389	*E3	R601	*G1	R709	*H2	R837	*G4	R983	D4		
C359	E3	C576	*B4	C766	*H3	CL672	*H3	IC358	E4	L553	*B6	R56	A2	R219	F1	R390	*E3	R602	*G1	R710	*H2	R838	*G4	R984	D4		
C360	E2	C577	*C5	C767	*G4	CL673	*H3	IC360	*D3	L601	*H1	R57	A2	R220	F1	R391	*E3	R603	*G2	R711	*H2	R839	*G4	R985	D4		
C361	E3	C578	*C6	C768	*H3	CL674	*H3	IC361	E4	L602	*H4	R58	A2	R221	F1	R392	D3	R604	*H2	R712	*H2	R840	*G2	R986	D4		
C362	E3	C601	*H2	C769	*G5	CL675	*H3	IC362	*D3	L603	*H4	R59	A2	R222	F1	R393	D2	R605	*H2	R713	*H2	R841	*G2	R987	D4		
C363	D3	C602	*G2	C770	*H3	CL676	H2	IC451	B6	L604	*H5	R60	*A2	R223	F1	R394	D4	R606	G1	R714	H2	R842	*G2	R988	D4		
C364	D3	C603	*H2	C771	*G4	CL677	H2	IC452	B6	L605	*H6	R61	*A3	R224	F1	R395	D4	R607	H1	R751	G5	R843	*G2	R989	D4		
C365	D3	C604	*G2	C772	*H3	CL751	G3	IC453	A6	L651	H6	R71	*B3	R225	F1	R396	D4	R608	G1	R752	G5	R844	G2	R990	D4		
C366	D3	C605	*G2	C773	G5	CL752	G3	IC454	A6	L652	*H3	R72	*B3	R226	F1	R397	E4	R609	*G2	R753	G4	R845	G4	R991	D4		
C367	D3	C606	*H2	C774	H2	CL754	G3	IC455	A5	L653	*H2	R73	*C3	R227	F1	R398	E4	R610	H1	R754	G4	R846	G4	R992	D4		
C368	*E3	C607	*H1	C775	*G5	CL755	G4	IC456	*A6	L751	*G5	R74	B4	R228	F1	R399	E4	R611	*H2	R755	G4	R901	E1	R993	D4		
C369	*E3	C608	*H1	C776	*H3	CL756	G4	IC457	A6	L752	*F3	R75	B5	R229	F1	R400	D4	R612	G2	R756	G2	R902	E1	R994	D4		
C370	*D3	C609	*G1	C777	*G4	CL901	E1	IC458	*E6	L753	*G4	R76	B4	R230	F1	R401	D4	R613	H2	R757	G4	R903	E1	R995	D4		
C371	*D4	C610	H1	C778	*H3	CL902	E1	IC459	E6			R101	*D6	R231	F1	R402	*E5	R614	H2	R758	*G2	R904	E1	R996	D4		
C372	D3	C611	G2	C779	G5	CL903	B5	IC501	C1	LV101	D6	R102	*D6	R232	F1	R403	E4	R615	*H5	R759	*G2	R905	E1	R997	D4		

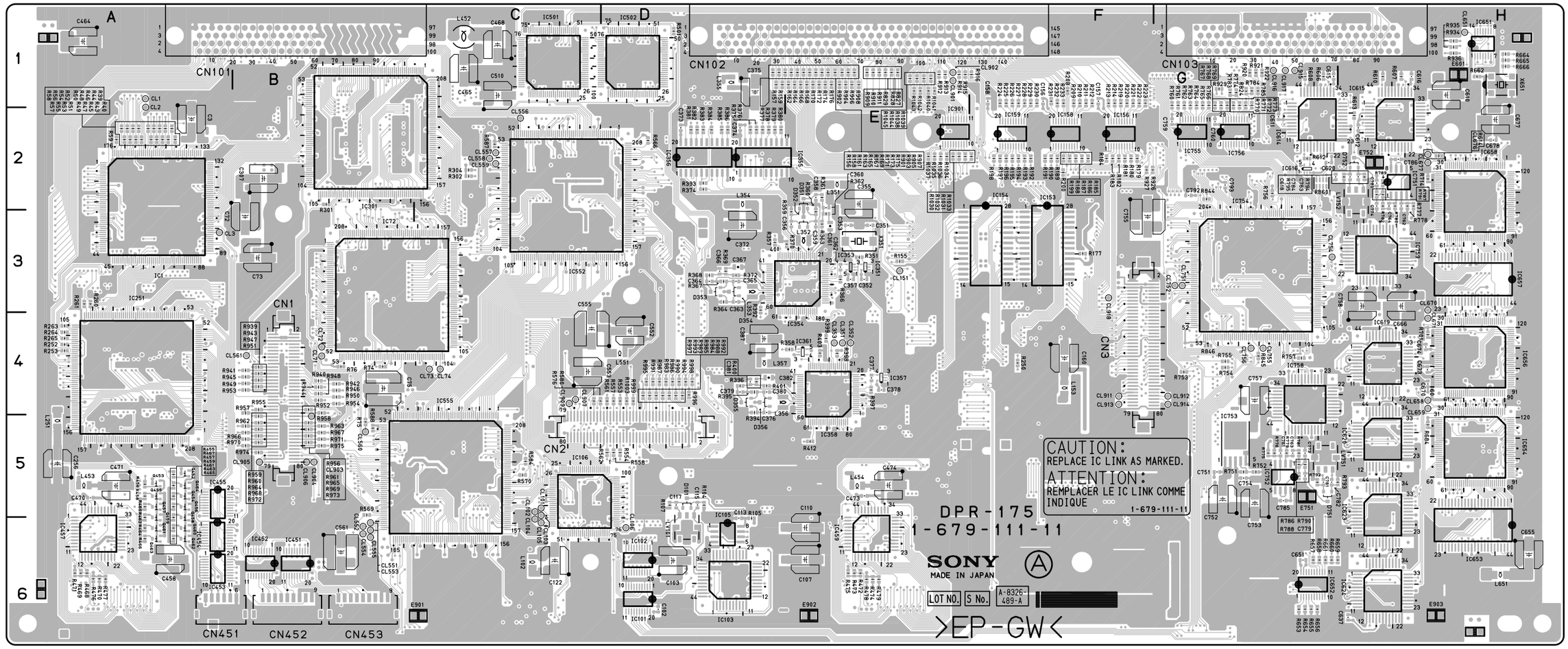

DPR-175 -A SIDE-

SUFFIX: -11

FOR DSR-1800/P

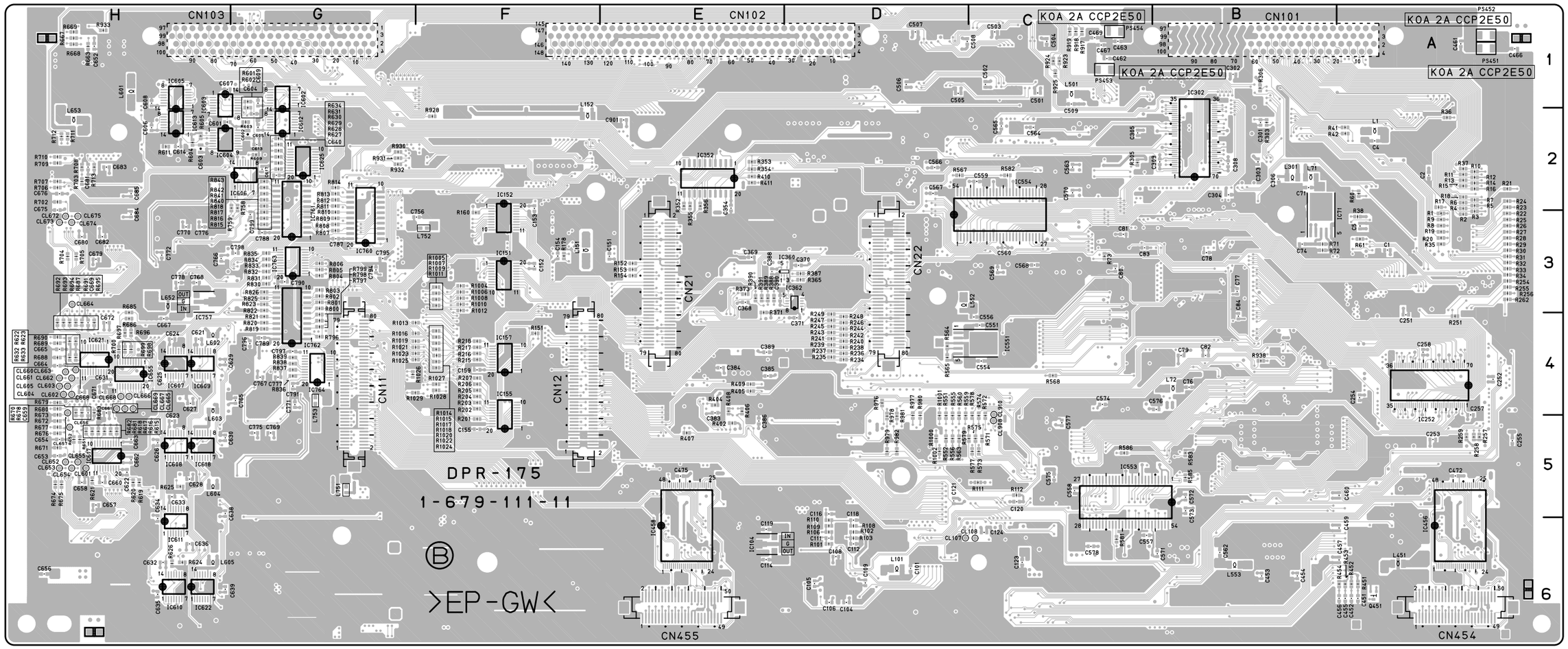

DPR-175 -B SIDE-

SUFFIX: -11

FOR DSR-1800/P

DR-428 (1-679-112-13)

C1	E2	C302	E4	C407	E3	D403	F1
C2	E2	C303	*F3	C408	E4	D404	A1
C3	E2	C304	E4	C409	*E1	D406	A2
C4	*E2	C305	B5	C410	*E1	D407	F1
C5	E1	C306	B5	C411	*D1	D408	F1
C6	E1	C307	D4	C412	A2	D410	F4
C7	E1	C308	B5	C413	A2	D412	F2
C8	E1	C309	*D4	C414	*A2	D414	F1
C9	E1	C310	D4	C415	A2	D415	F1
C10	E2	C311	D4	C416	A2	D417	E1
C11	E2	C312	D3	C417	*A2	D418	D4
C12	E2	C313	D3	C418	*F4		
C13	E2	C314	D3	C419	*F1	E1	A1
C14	E4	C315	D4	C421	F2		
C15	F3	C316	E4	C422	E2	F1	F2
C16	F3	C317	C5	C423	E2		
C17	*E2	C318	C5	C424	E2	IC1	D2
C18	*E2	C319	C5	C425	E3	IC2	*E2
C19	*F3	C320	C5	C426	*D2	IC3	*E2
C25	*E2	C321	B5	C427	E4	IC4	*D2
C26	*E2	C322	C5	C428	F2	IC5	E3
C27	D2	C323	B5	C429	*E3	IC6	*E2
C28	E2	C324	C5	C430	E3	IC7	*E2
C29	*E2	C325	C5	C431	A2	IC8	E3
C30	*E2	C326	C5			IC101	A3
C31	*D2	C327	C5	CL1	A3	IC102	A3
C32	E3	C328	C5	CL2	F3	IC103	*F2
C33	*E2	C329	*D4	CL6	D2	IC104	*E2
C34	E2	C330	*D4	CL7	D2	IC105	E2
C101	*A3	C331	D5	CL8	D2	IC106	*E2
C102	*A3	C332	*D5	CL9	D2	IC201	D2
C103	*F3	C333	*D5	CL10	E2	IC202	C2
C104	*F3	C334	D5	CL11	E1	IC203	A1
C105	*A3	C335	*D5	CL13	E3	IC204	D4
C106	A3	C336	E5	CL200	C2	IC206	C3
C107	*F3	C337	E5	CL201	C2	IC207	B1
C108	*F3	C338	E5			IC208	C3
C201	C2	C339	E5	CN1	F3	IC209	C2
C202	D2	C340	E5	CN3	*A3	IC301	F3
C203	D2	C341	E5	CN4	*F3	IC302	E4
C204	D2	C342	E5	CN10	*F1	IC303	B5
C205	D2	C343	B2	CN11	*F2	IC304	D5
C206	C2	C344	B2	CN12	D2	IC305	B2
C207	C2	C345	B2	CN13	D4	IC306	A2
C208	C2	C346	B3	CN14	D4	IC307	*E3
C209	C2	C347	B4	CN15	D5	IC401	E4
C210	A1	C348	B4	CN16	C4	IC402	*E3
C211	D2	C349	B3	CN17	B4	IC403	E1
C212	A1	C350	B3	CN18	A1	IC404	A2
C213	A1	C351	B4	CN19	*A1	IC405	*D2
C214	D4	C352	B4	CN20	*A1	IC406	*E3
C215	D4	C353	C4	CN21	*A1		
C216	D4	C354	B4	CN301	E2	L201	C3
C217	D4	C355	B4	CN302	E1	L202	B2
C218	C3	C356	B4	CN303	E1	L301	D3
C219	C3	C357	B4			L302	B3
C220	C3	C358	C4	D1	*C4	L400	E3
C221	C3	C359	B4	D3	C4	L401	E2
C222	C3	C360	B4	D4	*F3	L402	E2
C223	C3	C361	C4	D5	*E3	L403	F2
C224	C3	C362	B4	D6	*E3	L404	E2
C225	D2	C363	A2	D7	*E3		
C226	C2	C364	A2	D8	*E3	PS1	E2
C227	D3	C365	A2	D9	*F3	PS2	E2
C228	D3	C366	B2	D10	*F3	PS3	F2
C229	D3	C367	A2	D11	*E3	PS4	E2
C230	B2	C368	A2	D12	*F4		
C231	B2	C369	A3	D13	*E4	Q105	A3
C232	C2	C370	A3	D14	*E3	Q201	E2
C233	*B2	C371	B3	D15	B4	Q202	C3
C234	B1	C372	B3	D101	*A2	Q203	*B2
C235	*B1	C373	A3	D102	*E3	Q205	*B1
C236	*B1	C374	A3	D109	*A2	Q206	C3
C237	*B1	C375	B3	D117	*E2	Q207	*B1
C238	B2	C376	B3	D125	*E2	Q208	B2
C239	B2	C377	*E3	D201	C3	Q209	C3
C240	B1	C378	*E3	D202	*B1	Q210	B2
C241	B1	C379	C2	D203	B2	Q211	C3
C242	B1	C380	B3	D204	C2	Q301	F2
C243	C2	C381	E3	D205	C3	Q302	E2
C244	C2	C382	*F3	D301	D3	Q303	E4
C245	*A1	C383	E4	D302	*C5	Q304	B3
C246	*A1	C384	E4	D303	*D4	Q305	E3
C247	B2	C385	B5	D304	*C5	Q306	B3
C248	A1	C386	B5	D305	B2	Q401	*E1
C249	D2	C387	*B4	D306	*C5	Q402	E3
C250	*D4	C401	E3	D308	B3	Q403	D3
C251	C3	C402	E3	D309	*C4	Q404	E3
C253	C3	C403	D3	D311	*C4	Q405	*E1
C255	B2	C404	D3	D313	*C4	Q406	*F1
C256	*B2	C405	E3	D401	E3	Q407	*F1
C301	E4	C406	E3	D402	F1	Q408	F1

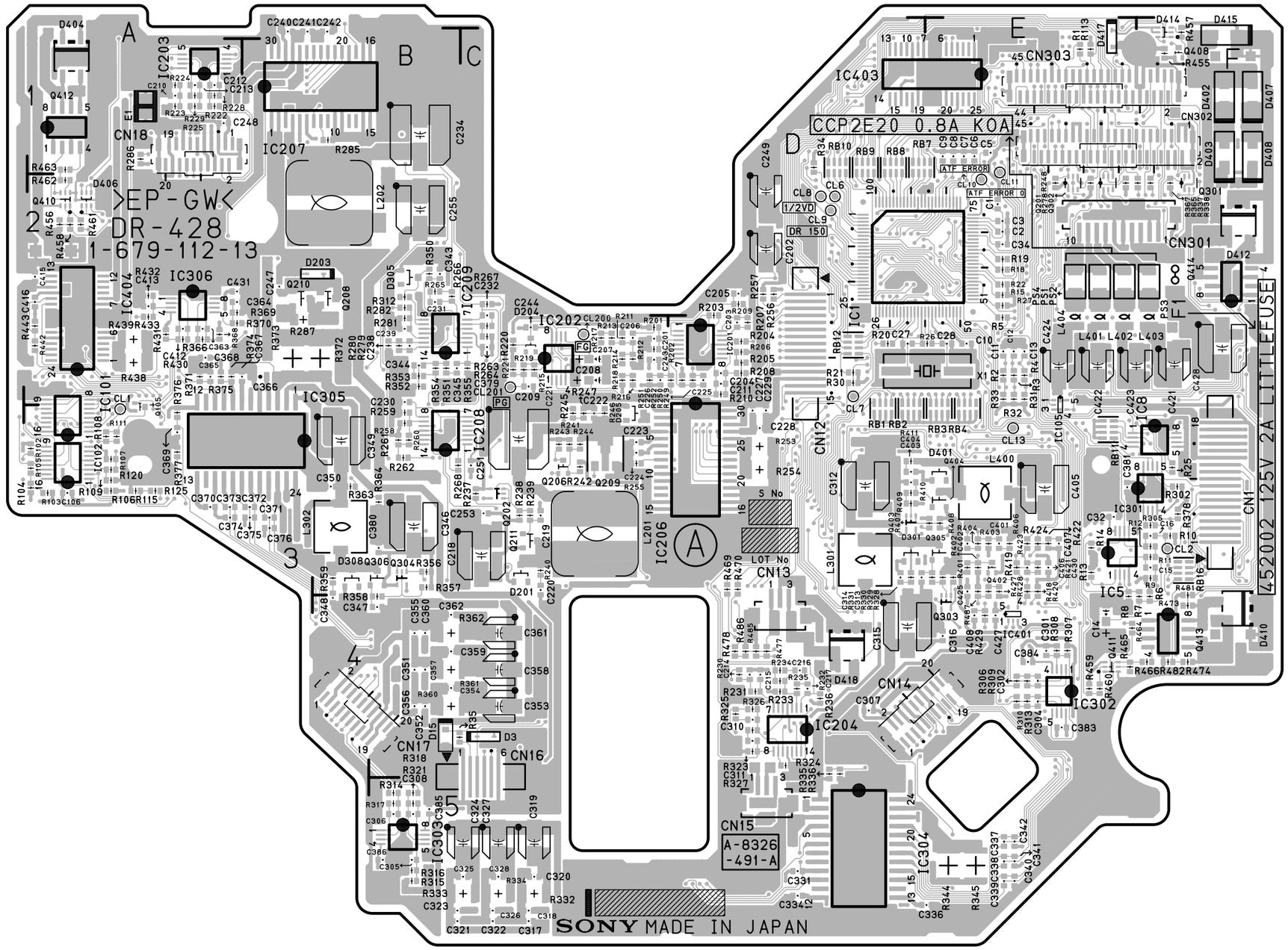

DR-428 -A SIDE-
SUFFIX: -13

http://getMANUAL.com

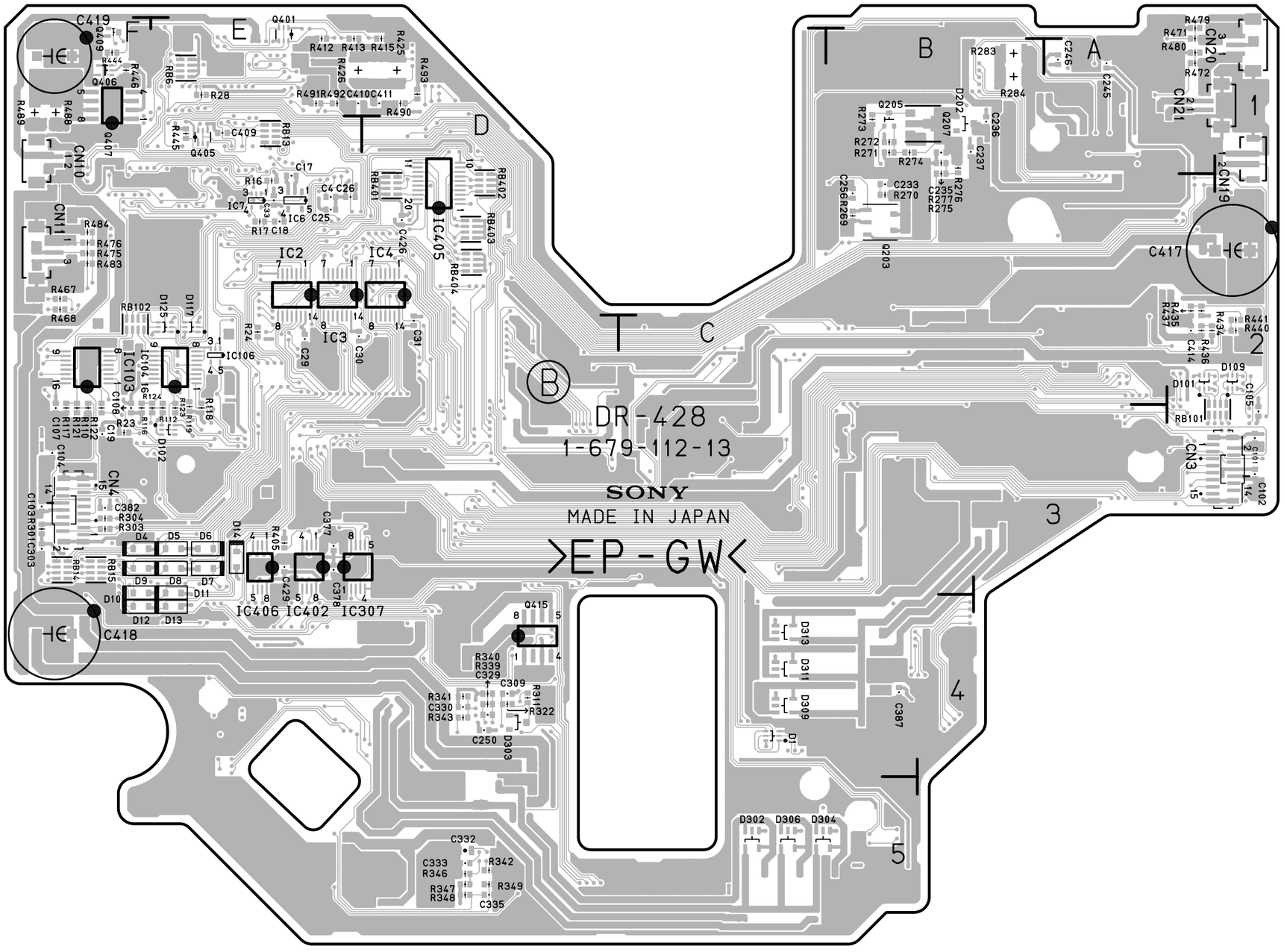

DR-428 -B SIDE-
SUFFIX: -13

Q409	*F1	R230	D4	R337	F2	R462	A2
Q410	A2	R231	D4	R338	F2	R463	A1
Q411	E4	R232	D4	R339	*D4	R464	E4
Q412	A1	R233	D4	R340	*D4	R465	E4
Q413	F4	R234	D4	R341	*D4	R466	F4
Q414	F2	R235	D4	R342	*D5	R467	*F2
Q415	*D4	R236	D4	R343	*D4	R468	*F2
		R237	C3	R344	E5	R469	D3
R1	E1	R238	C3	R345	E5	R470	D3
R2	E2	R239	C3	R346	*D5	R471	*A1
R3	E2	R240	C3	R347	*D5	R472	*A1
R4	E2	R241	C3	R348	*D5	R473	F4
R5	E2	R242	C3	R349	*D5	R474	F4
R6	F4	R243	C3	R350	B2	R475	*F2
R7	F4	R244	C3	R351	B2	R476	*F2
R8	E4	R245	C3	R352	B2	R477	D4
R9	F3	R246	C3	R353	B2	R478	D4
R10	F3	R247	C3	R354	B2	R479	*A1
R11	F3	R248	E2	R355	C2	R480	*A1
R12	F3	R249	D2	R356	B3	R481	F3
R13	E3	R250	D2	R357	B3	R482	F4
R14	E3	R251	C2	R358	B4	R483	*F2
R15	E2	R252	D2	R359	B3	R484	*F2
R16	*E2	R253	D3	R360	B4	R485	D4
R17	*E2	R254	D3	R361	B4	R486	D4
R18	E2	R255	C3	R362	B4	R487	E3
R19	E2	R256	D2	R363	B3	R488	*F1
R20	D2	R257	D2	R364	B3	R489	*F1
R21	D2	R258	B3	R365	F2	R490	*D1
R22	E2	R259	B3	R366	A2	R491	*E1
R23	*F3	R260	B3	R367	E2	R492	*E1
R24	*E2	R261	B3	R368	A2	R493	*D1
R25	F3	R262	B3	R369	A2		
R26	E2	R263	C2	R370	A2	RB1	D3
R27	E2	R264	C2	R371	A2	RB2	D3
R28	*E1	R265	B2	R372	B2	RB3	E3
R30	D2	R266	B2	R373	B2	RB4	E3
R31	E2	R267	C2	R374	A2	RB6	*E1
R32	E2	R268	B3	R375	A2	RB7	D1
R33	E2	R269	*B2	R376	A3	RB8	D1
R34	D1	R270	*B2	R377	A3	RB9	D1
R35	B4	R271	*B1	R378	F3	RB10	D1
R102	A3	R272	*B1	R401	E3	RB11	E3
R103	A3	R273	*B1	R402	E3	RB12	D2
R104	A3	R274	*B1	R403	E3	RB13	*E1
R105	A3	R275	*B1	R404	E3	RB14	*F3
R106	A3	R276	*B1	R405	*E3	RB15	*F3
R107	A3	R277	*B1	R406	E3	RB16	F3
R108	A3	R278	E2	R407	E3	RB101	*A3
R109	A3	R279	B2	R408	E3	RB102	*F2
R110	*F3	R280	B2	R409	D3	RB401	*D2
R111	A3	R281	B2	R410	D3	RB402	*D2
R112	*E3	R282	B2	R411	D3	RB403	*D2
R113	E1	R283	*B1	R412	*E1	RB404	*D2
R115	A3	R284	*B1	R413	*E1		
R116	*F3	R285	B1	R415	*D1	X1	E2
R117	*F3	R286	A1	R418	E3		
R118	*E3	R287	B2	R419	E3	*:B SIDE	
R119	*E3	R301	*F3	R420	E3		
R120	A3	R302	F3	R421	E3		
R121	*F3	R303	*F3	R422	E3		
R122	*F3	R304	*F3	R423	E3		
R123	*E3	R305	F3	R424	E3		
R124	*E3	R306	E4	R425	*D1		
R125	A3	R307	E4	R426	*E1		
R201	C2	R308	E4	R427	E3		
R202	C2	R309	E4	R428	E3		
R203	D2	R310	E4	R429	E4		
R204	D2	R311	*D4	R430	A2		
R205	D2	R312	B2	R431	A2		
R206	D2	R313	E4	R432	A2		
R207	D2	R314	B5	R433	A2		
R208	D2	R315	B5	R434	*A2		
R209	D2	R316	B5	R435	*A2		
R210	D2	R317	B5	R436	*A2		
R211	C2	R318	B5	R437	*A2		
R212	C2	R321	B5	R438	A2		
R213	C2	R322	*D4	R439	A2		
R214	C2	R323	D4	R440	*A2		
R215	C2	R324	D4	R441	*A2		
R216	C2	R325	D4	R442	A2		
R217	C2	R326	D4	R443	A2		
R218	C2	R327	D4	R444	*F1		
R219	C2	R328	E3	R445	*E1		
R220	C2	R329	E3	R446	*F1		
R221	C2	R330	E3	R455	F1		
R222	A1	R331	D3	R456	A2		
R223	A1	R332	C5	R457	F1		
R224	A1	R333	C5	R458	A2		
R225	A1	R334	C5	R459	E4		
R228	A1	R335	D4	R460	E4		
R229	A1	R336	D4	R461	A2		

DR-428 (1-679-112-12)

C1	E2	C302	E4	C407	E3	E1	A1
C2	E2	C303	*F3	C408	E4		
C3	E2	C304	E4	C409	*E1	F1	F2
C4	*E2	C305	B5	C410	*E1		
C5	E1	C306	B5	C411	*D1	IC1	D2
C6	E1	C307	D4	C412	A2	IC2	*E2
C7	E1	C308	B5	C413	A2	IC3	*E2
C8	E1	C309	*D4	C414	*A2	IC4	*D2
C9	E1	C310	D4	C415	A2	IC5	E3
C10	E2	C311	D4	C416	A2	IC6	*E2
C11	E2	C312	D3	C417	*A2	IC7	*E2
C12	E2	C313	D3	C418	*F4	IC8	E3
C13	E2	C314	D3	C419	*F1	IC101	A3
C14	E4	C315	D4	C421	F2	IC102	A3
C15	F3	C316	E4	C422	E2	IC103	*F2
C16	F3	C317	C5	C423	E2	IC104	*E2
C17	*E2	C318	C5	C424	E2	IC105	E2
C18	*E2	C319	C5	C425	E3	IC106	*E2
C19	*F3	C320	C5	C426	*D2	IC201	D2
C25	*E2	C321	B5	C427	E4	IC202	C2
C26	*E2	C322	C5	C428	F2	IC203	A1
C27	D2	C323	B5	C429	*E3	IC204	D4
C28	E2	C324	C5	C430	E3	IC206	C3
C29	*E2	C325	C5	C431	A2	IC207	B1
C30	*E2	C326	C5			IC208	C3
C31	*D2	C327	C5	CL1	A3	IC209	C2
C32	E3	C328	C5	CL2	F3	IC301	F3
C33	*E2	C329	*D4	CL6	D2	IC302	E4
C34	E2	C330	*D4	CL7	D2	IC303	B5
C101	*A3	C331	D5	CL8	D2	IC304	D5
C102	*A3	C332	*D5	CL9	D2	IC305	B2
C103	*F3	C333	*D5	CL10	E2	IC306	A2
C104	*F3	C334	D5	CL11	E1	IC307	*E3
C105	*A3	C335	*D5	CL13	E3	IC401	E4
C106	A3	C336	E5	CL200	C2	IC402	*E3
C107	*F3	C337	E5	CL201	C2	IC403	E1
C108	*F3	C338	E5			IC404	A2
C201	C2	C339	E5	CN1	F3	IC405	*D2
C202	D2	C340	E5	CN3	*A3	IC406	*E3
C203	D2	C341	E5	CN4	*F3		
C204	D2	C342	E5	CN10	*F1	L201	C3
C205	D2	C343	B2	CN11	*F2	L202	B2
C206	C2	C344	B2	CN12	D2	L301	D3
C207	C2	C345	B2	CN13	D4	L302	B3
C208	C2	C346	B3	CN14	D4	L400	E3
C209	C2	C347	B4	CN15	D5	L401	E2
C210	A1	C348	B4	CN16	C4	L402	E2
C211	D2	C349	B3	CN17	B4	L403	F2
C212	A1	C350	B3	CN18	A1	L404	E2
C213	A1	C351	B4	CN19	*A1		
C214	D4	C352	B4	CN20	*A1	PS1	E2
C215	D4	C353	C4	CN21	*A1	PS2	E2
C216	D4	C354	B4	CN301	E2	PS3	F2
C217	D4	C355	B4	CN302	E1	PS4	E2
C218	C3	C356	B4	CN303	E1		
C219	C3	C357	B4			Q105	A3
C220	C3	C358	C4	D1	*C4	Q201	E2
C221	C3	C359	B4	D3	C4	Q202	C3
C222	C3	C360	B4	D101	*A2	Q203	*B2
C223	C3	C361	C4	D102	*E3	Q205	*B1
C224	C3	C362	B4	D109	*A2	Q206	C3
C225	D2	C363	A2	D117	*E2	Q207	*B1
C226	C2	C364	A2	D125	*E2	Q208	B2
C227	D3	C365	A2	D201	C3	Q209	C3
C228	D3	C366	B2	D202	*B1	Q210	B2
C229	D3	C367	A2	D203	B2	Q211	C3
C230	B2	C368	A2	D204	C2	Q301	F2
C231	B2	C369	A3	D205	C3	Q302	E2
C232	C2	C370	A3	D301	D3	Q303	E4
C233	*B2	C371	B3	D302	*C5	Q304	B3
C234	B1	C372	B3	D303	*D4	Q305	E3
C235	*B1	C373	A3	D304	*C5	Q306	B3
C236	*B1	C374	A3	D305	B2	Q401	*E1
C237	*B1	C375	B3	D306	*C5	Q402	E3
C238	B2	C376	B3	D308	B3	Q403	D3
C239	B2	C377	*E3	D309	*C4	Q404	E3
C240	B1	C378	*E3	D311	*C4	Q405	*E1
C241	B1	C379	C2	D313	*C4	Q406	*F1
C242	B1	C380	B3	D401	E3	Q407	*F1
C243	C2	C381	E3	D402	F1	Q408	F1
C244	C2	C382	*F3	D403	F1	Q409	*F1
C245	*A1	C383	E4	D404	A1	Q410	A2
C246	*A1	C384	E4	D406	A2	Q411	E4
C247	B2	C385	B5	D407	F1	Q412	A1
C248	A1	C386	B5	D408	F1	Q413	F4
C249	D2	C387	*B4	D410	F4	Q414	F2
C250	*D4	C401	E3	D412	F2	Q415	*D4
C251	C3	C402	E3	D414	F1		
C253	C3	C403	D3	D415	F1	R1	E1
C255	B2	C404	D3	D417	E1	R2	E2
C256	*B2	C405	E3	D418	D4	R3	E2
C301	E4	C406	E3			R4	E2

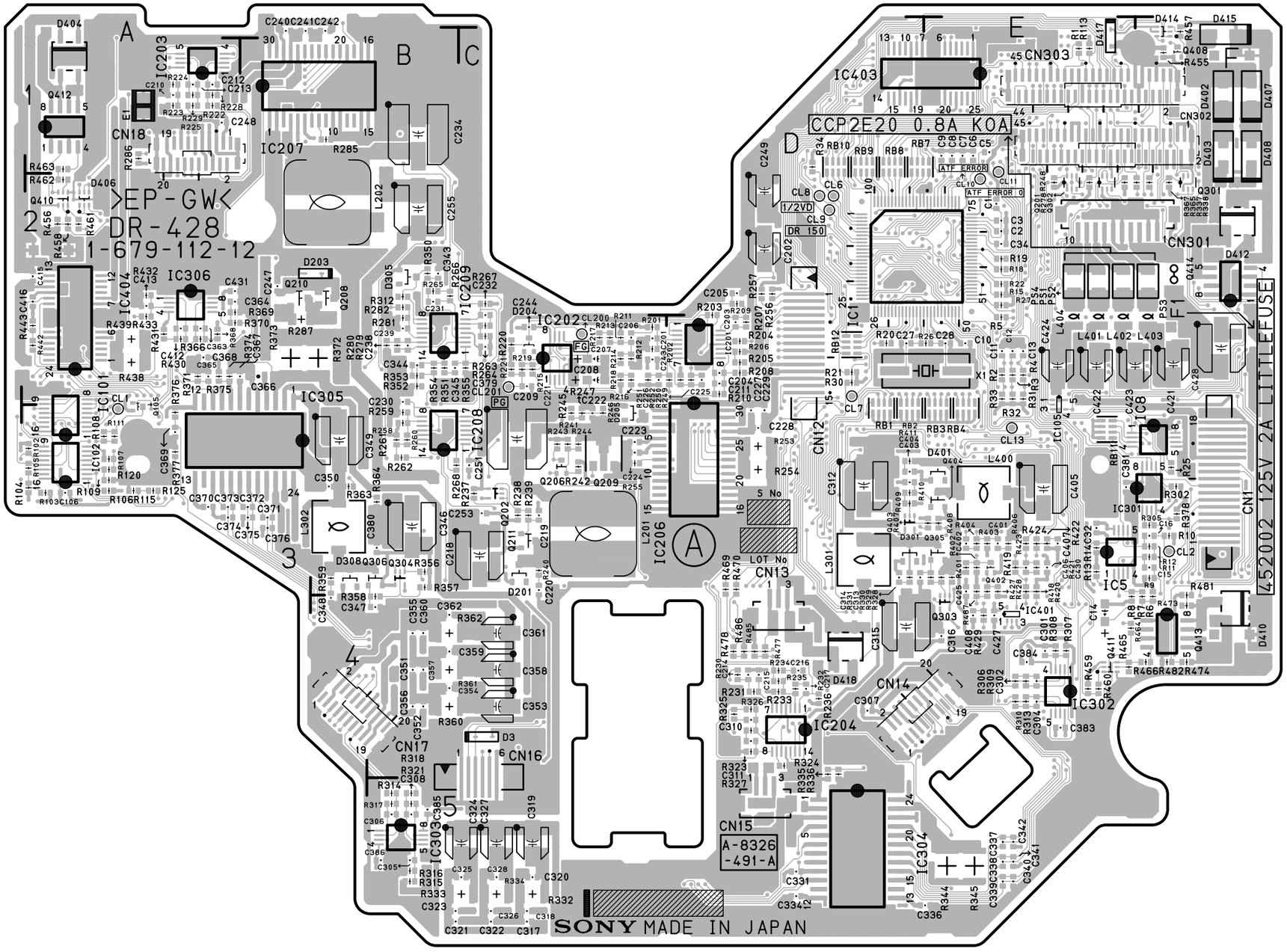

DR-428 -A SIDE-
SUFFIX: -12

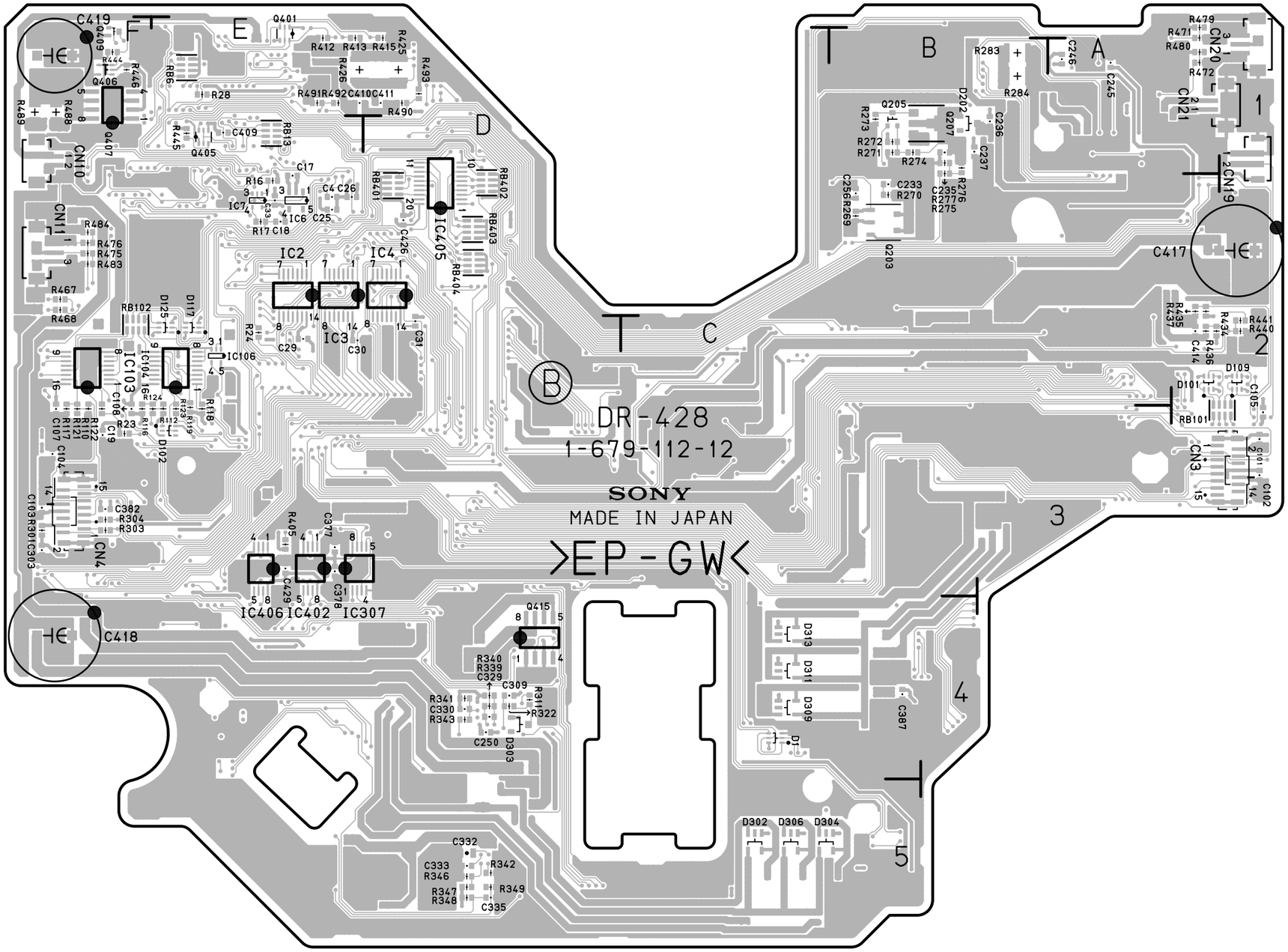
DR-428
1-679-112-12
SONY
MADE IN JAPAN
>EP-GW<
C419
C418
C417
CN10
CN11
CN14
CN19
CN20
CN21
CN3
IC2
IC3
IC4
IC405
IC406
IC402
IC307
IC103
IC104
IC106
Q401
Q406
Q407
Q405
Q415
Q205
Q207
Q203
D202
D313
D311
D309
D303
D302
D306
D304
D109
D101
RB101
RB102
RB401
RB402
RB403
RB404
C332
C333
C335
C342
C349
C346
C347
C348
C387
C414
C415
C416
C417
C418
C419
C426
C427
C428
C429
C430
C431
C432
C433
C434
C435
C436
C437
C438
C439
C440
C441
C442
C443
C444
C445
C446
C447
C448
C449
C450
C451
C452
C453
C454
C455
C456
C457
C458
C459
C460
C461
C462
C463
C464
C465

DV-26 (1-679-108-13)

C101	*B2	CL101	B3
C102	B1	CL102	B3
C103	*B1	CL104	B3
C104	B1	CL105	B3
C105	*B1	CL201	C3
C106	B2	CL202	C3
C201	*C4	CL203	C3
C202	C4	CL204	C3
C203	*C4	CL205	C3
C204	C3	CL206	C3
C205	*C4	CL207	C3
C206	*C4	CL208	C3
C207	C2	CL209	C2
C208	*C4	CL210	C3
C209	*C3	CL211	C3
C210	C2	CL212	C3
C216	*C3	CL213	C3
C217	C4	CL214	C3
C218	*C4	CL345	C1
C219	C4	CL346	C1
C220	C3	CL347	C1
C221	*C4	CL348	C1
C222	*C3	CL350	C1
C223	*C3	CL351	B2
C224	*C3	CL352	B2
C225	*C3	CL353	B2
C226	*C5	CL354	B2
C227	*C4	CL355	A2
C228	*C5	CL356	A2
C229	C2	CL357	A2
C230	C2	CL358	A2
C231	C2	CL359	A2
C232	C2	CL360	A2
C307	*C1	CL361	A4
C308	*C2	CL365	A2
C309	*C1	CL366	A2
C310	C2	CL367	A3
C311	*A3	CL368	A3
C312	*B3	CL369	A4
C313	*B3	CL370	A3
C314	*B3	CL371	A3
C315	*A4	CL372	A4
C323	*B2	CL373	A3
C324	B2	CL374	A4
C326	*A3	CL375	A3
C327	*A3	CL376	A3
C329	*A3	CL377	B4
C330	*A3	CL378	A3
C331	*B3	CL379	A4
C332	*A3	CL380	A3
C333	*A3	CL381	A4
C334	*A3	CL382	A3
C335	A4	CL383	A4
C336	B4	CL388	A4
C413	*C1	CL389	A4
C414	*C1	CL390	A4
C415	*C1	CL391	A2
C416	*C1	CL392	A2
C417	*C1	CL393	A2
C418	*A4	CL394	A2
C420	*B4	CL395	A4
C421	B4	CL400	C1
C501	*B4	CL501	A5
C502	*B4	CL502	B4
C503	*B4	CL503	A4
C504	*B4	CL504	B4
C505	*B4	CL505	A4
C506	*B4	CL506	A5
C507	*C4	CL507	A5
C508	*C4	CL508	A5
C509	*B4	CL601	A2
C510	*B4	CL602	A2
C511	*A4	CL603	A2
C512	B4	CL604	A2
C513	*A4	CL605	A2
C514	*A4	CL606	A2
C515	*A4	CL607	A2
C601	*B1	CL608	A2
C602	A1	CL609	A1
C603	*A1	CL610	A1
C604	*B1	CL611	A1
C605	*B1	CL612	A1
C606	*A1	CL613	A1
C607	A1	CL614	A1
C608	B1	CL615	A1
C609	B2	CL616	A1
C610	*A2	CL618	B2
C611	*A2	CL619	B2
C613	*A2	CL620	A2
C614	*A2	CL621	B2
C615	*A2		
		CN101	*B2

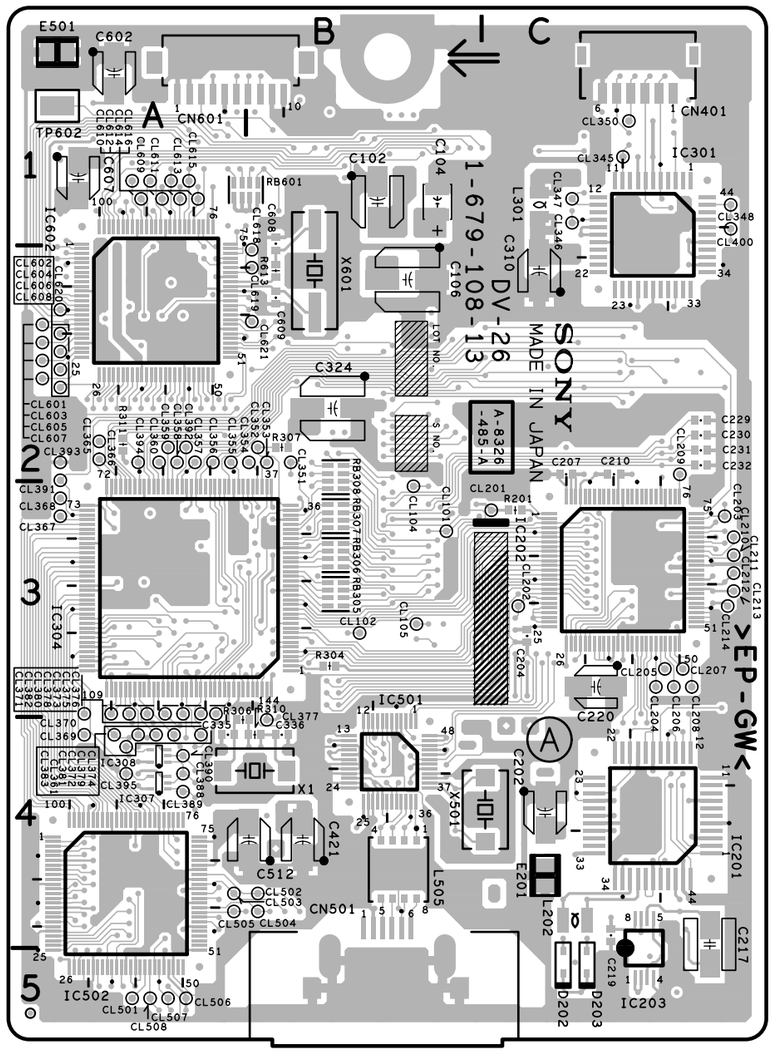

DV-26 -A SIDE-
SUFFIX: -13
FOR DSBK-1803

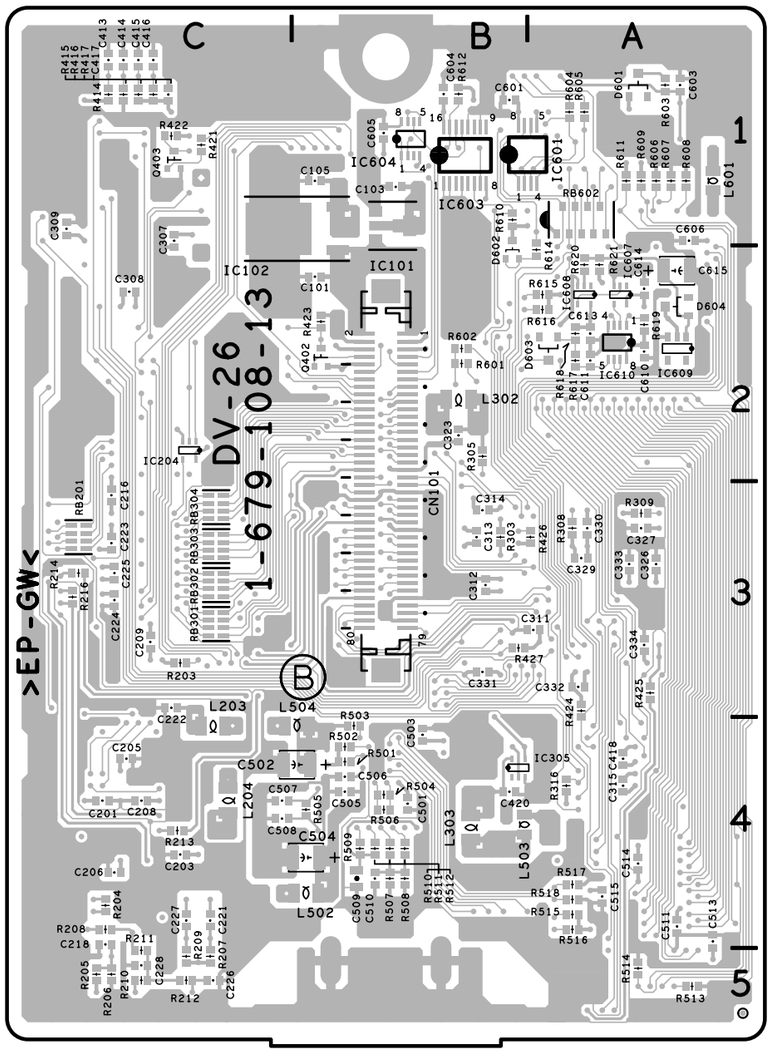

DV-26 -B SIDE-
SUFFIX: -13
FOR DSBK-1803

CN401	C1	R507	*B4
CN501	B5	R508	*B4
CN601	A1	R509	*B4
		R510	*B4
D202	C5	R511	*B4
D203	C5	R512	*B4
D601	*A1	R513	*A5
D602	*B2	R514	*A5
D603	*A2	R515	*A4
D604	*A2	R516	*A4
		R517	*A4
E201	C4	R518	*A4
E501	A1	R601	*B2
		R602	*B2
IC101	*B1	R603	*A1
IC102	*B1	R604	*A1
IC201	C4	R605	*A1
IC202	C3	R606	*A1
IC203	C5	R607	*A1
IC204	*C2	R608	*A1
IC301	C1	R609	*A1
IC304	A3	R610	*B1
IC305	*B4	R611	*A1
IC307	A4	R612	*B1
IC308	A4	R613	B2
IC501	B4	R614	*A2
IC502	A4	R615	*A2
IC601	*B1	R616	*A2
IC602	A2	R617	*A2
IC603	*B1	R618	*A2
IC604	*B1	R619	*A2
IC607	*A2	R620	*A2
IC608	*A2	R621	*A2
IC609	*A2		
IC610	*A2	RB201	*C3
		RB301	*C3
L202	C4	RB302	*C3
L203	*C4	RB303	*C3
L204	*C4	RB304	*C3
L301	C1	RB305	B3
L302	*B2	RB306	B3
L303	*B4	RB307	B3
L502	*B4	RB308	B2
L503	*B4	RB601	A1
L504	*B4	RB602	*A1
L505	B4		
L601	*A1	TP602	A1
Q402	*B2	X1	B4
Q403	*C1	X501	C4
		X601	B2
R201	C3		
R203	*C3	*:B SIDE	
R204	*C4		
R205	*C5		
R206	*C5		
R207	*C5		
R208	*C4		
R209	*C5		
R210	*C5		
R211	*C5		
R212	*C5		
R213	*C4		
R214	*C3		
R216	*C3		
R303	*B3		
R304	B3		
R305	*B2		
R306	A4		
R307	B2		
R308	*A3		
R309	*A3		
R310	B4		
R311	A2		
R316	*A4		
R414	*C1		
R415	*C1		
R416	*C1		
R417	*C1		
R421	*C1		
R422	*C1		
R423	*B2		
R424	*A3		
R425	*A3		
R426	*A3		
R427	*B3		
R501	*B4		
R502	*B4		
R503	*B4		
R504	*B4		
R505	*B4		
R506	*B4		

DV-26 (1-679-108-12)

C101	*B2	C615	*A2
C102	B1		
C103	*B1	CL101	B3
C104	B1	CL102	B3
C105	*B1	CL104	B3
C106	B2	CL105	B3
C201	*C4	CL201	C3
C202	C4	CL202	C3
C203	*C4	CL203	C3
C204	C3	CL204	C3
C205	*C4	CL205	C3
C206	*C4	CL206	C3
C207	C2	CL207	C3
C208	*C4	CL208	C3
C209	*C3	CL209	C2
C210	C2	CL210	C3
C216	*C3	CL211	C3
C217	*C4	CL212	C3
C218	*C4	CL345	C1
C219	C4	CL346	C1
C220	C3	CL347	C1
C221	*C4	CL348	C1
C222	*C3	CL350	C1
C223	*C3	CL351	B2
C224	*C3	CL352	B2
C225	*C3	CL353	B2
C226	*C5	CL354	B2
C227	*C4	CL355	A2
C228	*C5	CL356	A2
C229	C2	CL357	A2
C230	C2	CL358	A2
C231	C2	CL359	A2
C232	C2	CL360	A2
C307	*C1	CL361	A4
C308	*C2	CL365	A2
C309	*C1	CL366	A2
C310	C2	CL367	A3
C311	*A3	CL368	A3
C312	*B3	CL369	A4
C313	*B3	CL370	A3
C314	*B3	CL371	A3
C315	*A4	CL372	A4
C323	*B2	CL373	A3
C324	B2	CL374	A4
C326	*A3	CL375	A3
C327	*A3	CL376	A3
C329	*A3	CL377	B4
C330	*A3	CL378	A3
C331	*B3	CL379	A4
C332	*A3	CL380	A3
C333	*A3	CL381	A4
C334	*A3	CL382	A3
C335	A4	CL383	A4
C336	B4	CL388	A4
C399	B4	CL389	A4
C413	*C1	CL390	A4
C414	*C1	CL391	A2
C415	*C1	CL392	A2
C416	*C1	CL393	A2
C417	*C1	CL394	A2
C418	*A4	CL395	A4
C420	*B4	CL400	C1
C421	B4	CL501	A5
C422	*B4	CL502	B4
C501	*B4	CL503	A4
C502	*B4	CL504	B4
C503	*B4	CL505	A4
C504	*B4	CL506	A5
C505	*B4	CL507	A5
C506	*B4	CL508	A5
C507	*C4	CL601	A2
C508	*C4	CL602	A2
C509	*B4	CL603	A2
C510	*B4	CL604	A2
C511	*A4	CL605	A2
C512	B4	CL606	A2
C513	*A4	CL607	A2
C514	*A4	CL608	A2
C515	*A4	CL609	A1
C601	*B1	CL610	A1
C602	A1	CL611	A1
C603	*A1	CL612	A1
C604	*B1	CL613	A1
C605	*B1	CL614	A1
C606	*A1	CL615	A1
C607	A1	CL616	A1
C608	B1	CL618	B2
C609	B2	CL619	B2
C610	*A2	CL620	A2
C611	*A2	CL621	B2
C613	*A2		
C614	*A2	CN101	*B2

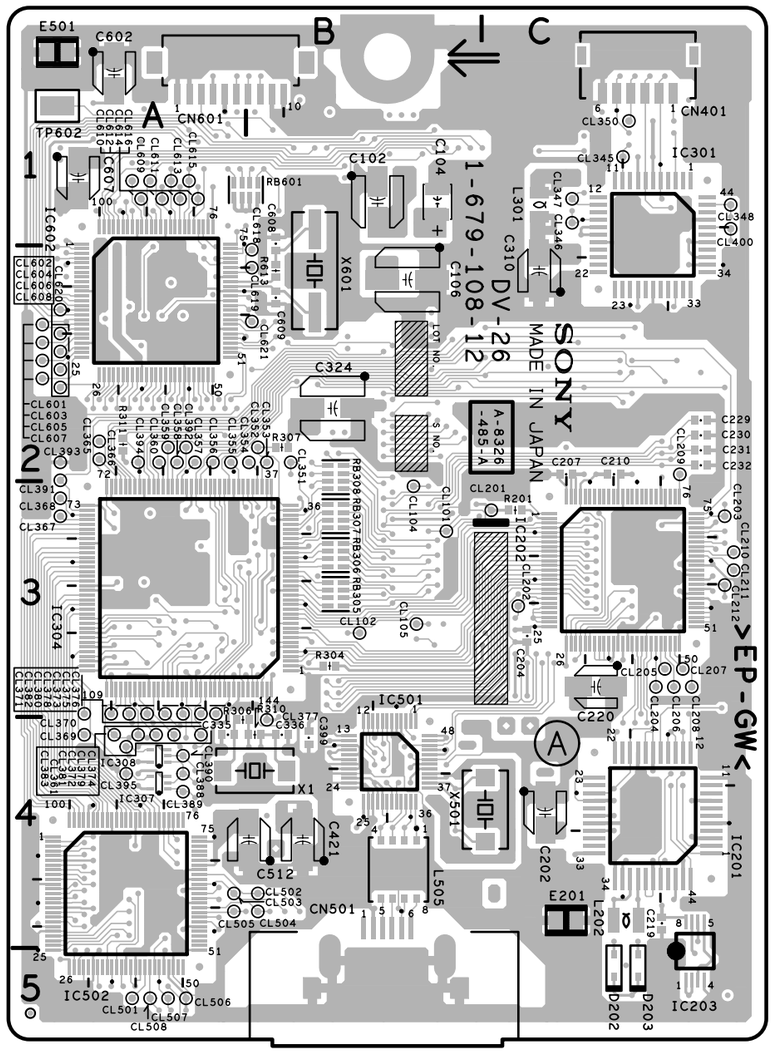

DV-26 -A SIDE-

SUFFIX: -12

FOR DSBK-1803

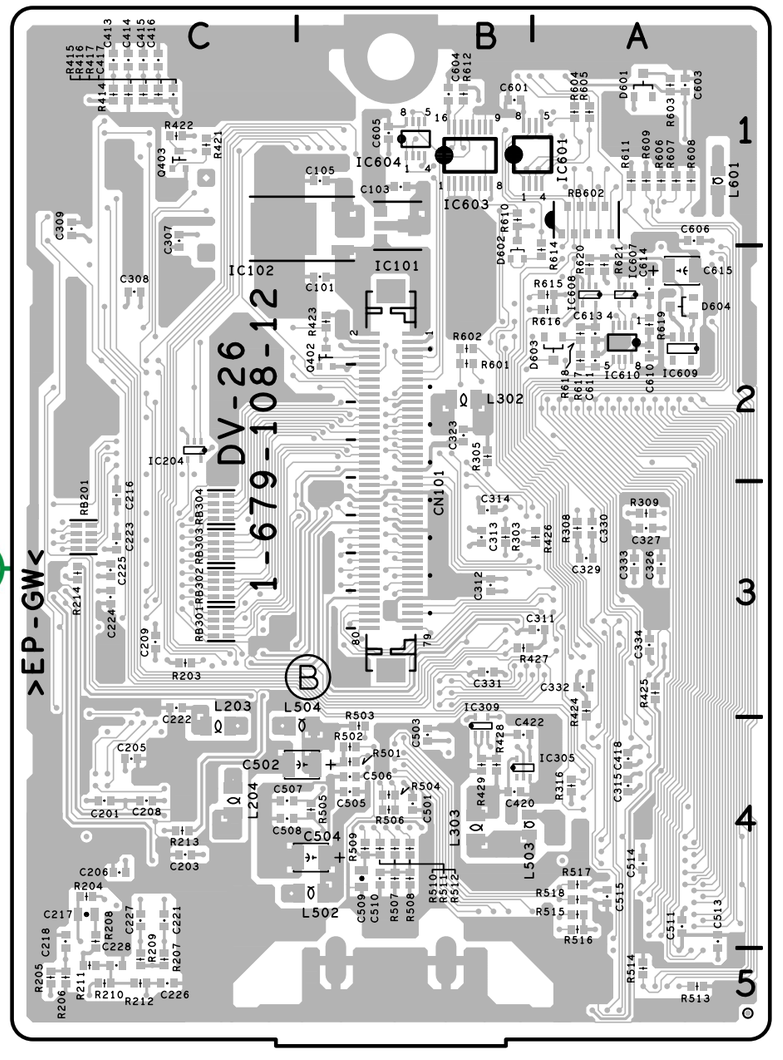

DV-26 -B SIDE-

SUFFIX: -12

FOR DSBK-1803

CN401	C1	R505	*B4
CN501	B5	R506	*B4
CN601	A1	R507	*B4
		R508	*B4
D202	C5	R509	*B4
D203	C5	R510	*B4
D601	*A1	R511	*B4
D602	*B2	R512	*B4
D603	*A2	R513	*A5
D604	*A2	R514	*A5
		R515	*A4
E201	C4	R516	*A4
E501	A1	R517	*A4
		R518	*A4
IC101	*B1	R601	*B2
IC102	*B1	R602	*B2
IC201	C4	R603	*A1
IC202	C3	R604	*A1
IC203	C5	R605	*A1
IC204	*C2	R606	*A1
IC301	C1	R607	*A1
IC304	A3	R608	*A1
IC305	*B4	R609	*A1
IC307	A4	R610	*B1
IC308	A4	R611	*A1
IC309	*B4	R612	*B1
IC501	B4	R613	B2
IC502	A4	R614	*A2
IC601	*B1	R615	*A2
IC602	A2	R616	*A2
IC603	*B1	R617	*A2
IC604	*B1	R618	*A2
IC607	*A2	R619	*A2
IC608	*A2	R620	*A2
IC609	*A2	R621	*A2
IC610	*A2		
		RB201	*C3
L202	C4	RB301	*C3
L203	*C4	RB302	*C3
L204	*C4	RB303	*C3
L301	C1	RB304	*C3
L302	*B2	RB305	B3
L303	*B4	RB306	B3
L502	*B4	RB307	B3
L503	*B4	RB308	B2
L504	*B4	RB601	A1
L505	B4	RB602	*A1
L601	*A1		
		TP602	A1
Q402	*B2		
Q403	*C1	X1	B4
		X501	C4
R201	C3	X601	B2
R203	*C3		
R204	*C4	*:B SIDE	
R205	*C5		
R206	*C5		
R207	*C5		
R208	*C4		
R209	*C5		
R210	*C5		
R211	*C5		
R212	*C5		
R213	*C4		
R214	*C3		
R303	*B3		
R304	B3		
R305	*B2		
R306	A4		
R307	B2		
R308	*A3		
R309	*A3		
R310	B4		
R311	A2		
R316	*A4		
R414	*C1		
R415	*C1		
R416	*C1		
R417	*C1		
R421	*C1		
R422	*C1		
R423	*B2		
R424	*A3		
R425	*A3		
R426	*A3		
R427	*B3		
R428	*B4		
R429	*B4		
R501	*B4		
R502	*B4		
R503	*B4		
R504	*B4		

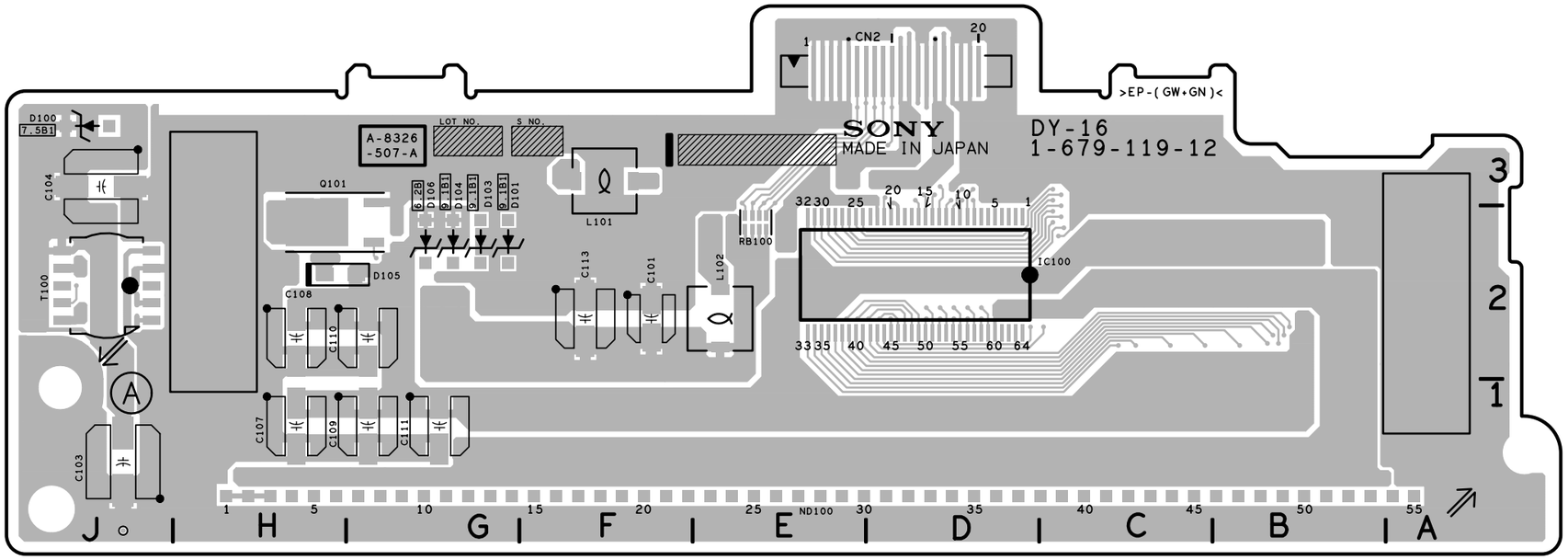

DY-16 -A SIDE-
SUFFIX: -12

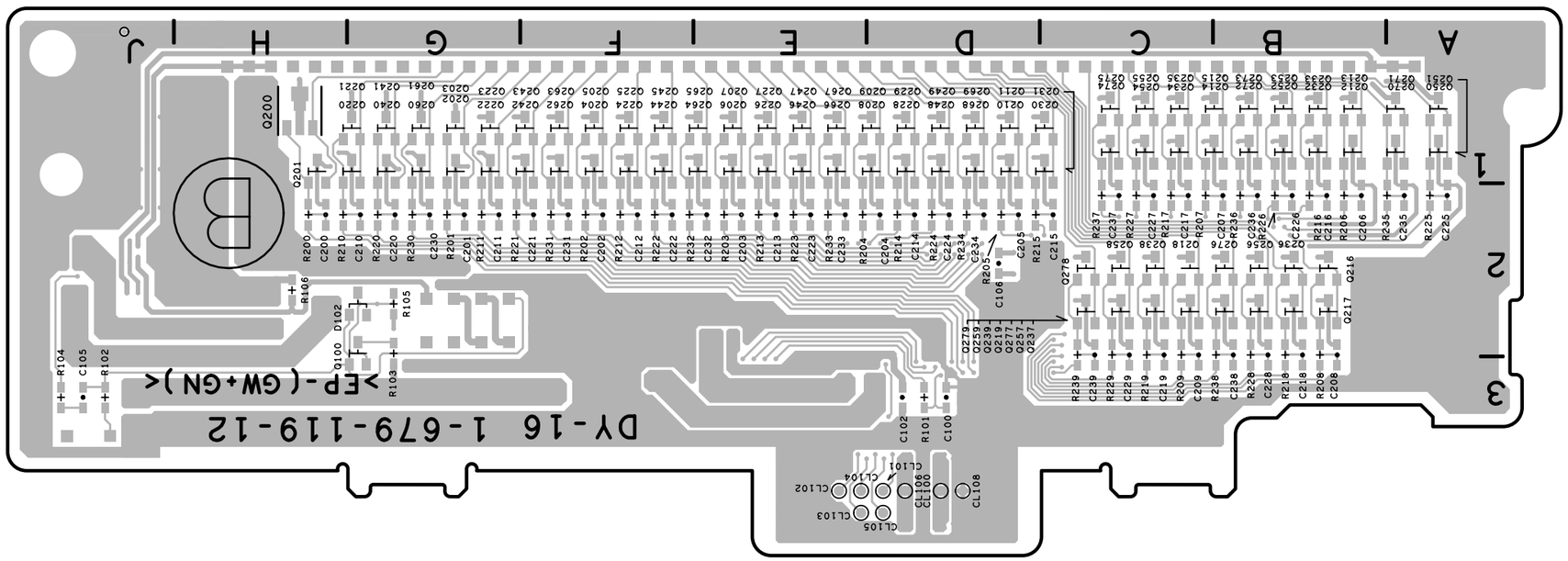

DY-16 -B SIDE-
SUFFIX: -12

DY-16 (1-679-119-12)

C100	*D3	Q210	*D1	R215	*D2
C101	F2	Q211	*D1	R216	*B2
C102	*D3	Q212	*B1	R217	*C2
C103	J1	Q213	*B1	R218	*B2
C104	J3	Q214	*B1	R219	*C2
C105	*J3	Q215	*B1	R220	*G2
C106	*D2	Q216	*B2	R221	*G2
C107	H1	Q217	*B2	R222	*F2
C108	H2	Q218	*C2	R223	*E2
C109	G1	Q219	*C2	R224	*D2
C110	G2	Q220	*G1	R225	*A2
C111	G1	Q221	*G1	R226	*B2
C113	F2	Q222	*G1	R227	*C2
C200	*H2	Q223	*G1	R228	*B2
C201	*G2	Q224	*F1	R229	*C2
C202	*F2	Q225	*F1	R230	*G2
C203	*E2	Q226	*E1	R231	*F2
C204	*D2	Q227	*E1	R232	*F2
C205	*D2	Q228	*D1	R233	*E2
C206	*B2	Q229	*D1	R234	*D2
C207	*B2	Q230	*C1	R235	*A2
C208	*B2	Q231	*C1	R236	*B2
C209	*C2	Q232	*B1	R237	*C2
C210	*G2	Q233	*B1	R238	*B2
C211	*G2	Q234	*C1	R239	*C2
C212	*F2	Q235	*C1		
C213	*E2	Q236	*B2	RB100	E2
C214	*D2	Q237	*B2		
C215	*C2	Q238	*C2	T100	J2
C216	*B2	Q239	*C2		
C217	*C2	Q240	*G1	*:B SIDE	
C218	*B2	Q241	*G1		
C219	*C2	Q242	*F1		
C220	*G2	Q243	*F1		
C221	*F2	Q244	*F1		
C222	*F2	Q245	*F1		
C223	*E2	Q246	*E1		
C224	*D2	Q247	*E1		
C225	*A2	Q248	*D1		
C226	*B2	Q249	*D1		
C227	*C2	Q250	*A1		
C228	*B2	Q251	*A1		
C229	*C2	Q252	*B1		
C230	*G2	Q253	*B1		
C231	*F2	Q254	*C1		
C232	*E2	Q255	*C1		
C233	*E2	Q256	*B2		
C234	*D2	Q257	*B2		
C235	*A2	Q258	*C2		
C236	*B2	Q259	*C2		
C237	*C2	Q260	*G1		
C238	*B2	Q261	*G1		
C239	*C2	Q262	*F1		
		Q263	*F1		
CL100	*D3	Q264	*E1		
CL101	*D3	Q265	*E1		
CL102	*E3	Q266	*E1		
CL103	*E3	Q267	*E1		
CL104	*E3	Q268	*D1		
CL105	*D3	Q269	*D1		
CL106	*D3	Q270	*A1		
CL108	*D3	Q271	*A1		
		Q272	*B1		
CN2	D3	Q273	*B1		
		Q274	*C1		
D100	J3	Q275	*C1		
D101	G2	Q276	*B2		
D102	*G2	Q277	*B2		
D103	G2	Q278	*C2		
D104	G2	Q279	*C2		
D105	H2				
D106	G2	R101	*D3		
		R102	*J3		
IC100	D2	R103	*G2		
		R104	*J3		
L101	F3	R105	*G2		
L102	E2	R106	*H2		
		R200	*H2		
ND100	E1	R201	*G2		
		R202	*F2		
Q100	*G2	R203	*E2		
Q101	H2	R204	*E2		
Q200	*H1	R205	*D2		
Q201	*H1	R206	*B2		
Q202	*G1	R207	*C2		
Q203	*G1	R208	*B2		
Q204	*F1	R209	*C2		
Q205	*F1	R210	*H2		
Q206	*E1	R211	*G2		
Q207	*E1	R212	*F2		
Q208	*D1	R213	*E2		
Q209	*D1	R214	*D2		

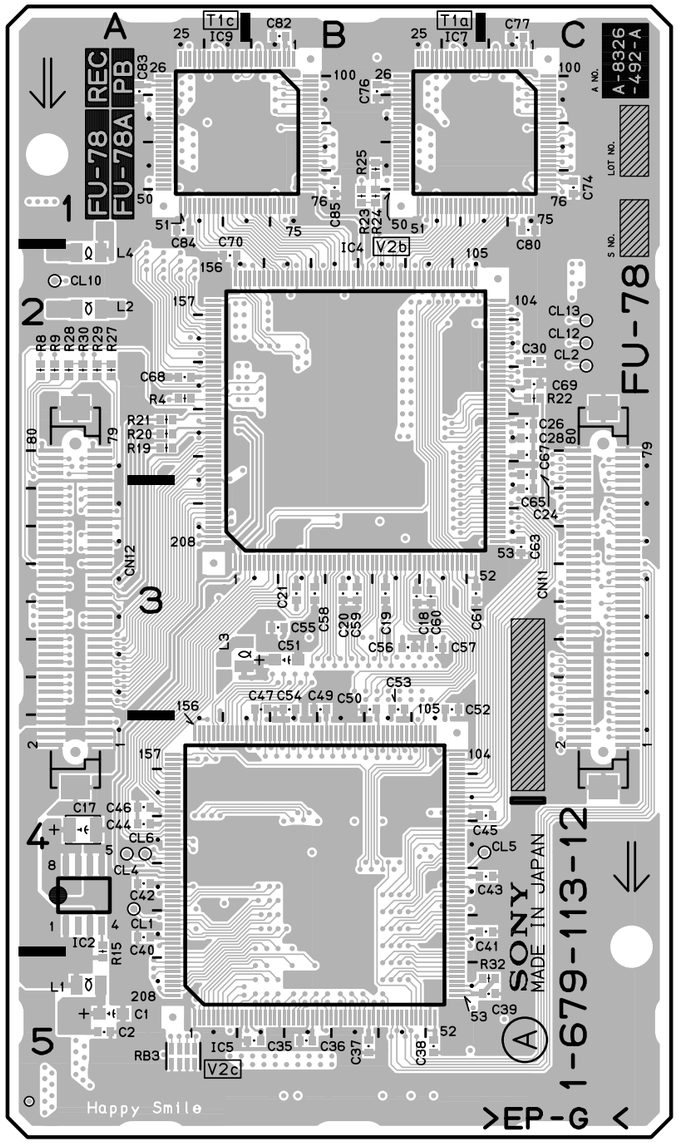

FU-78P/78R -A SIDE-

SUFFIX: -12

FU-78P: FOR DSR-1600/P
FOR DSR-1800/P
FU-78R: FOR DSR-1800/P

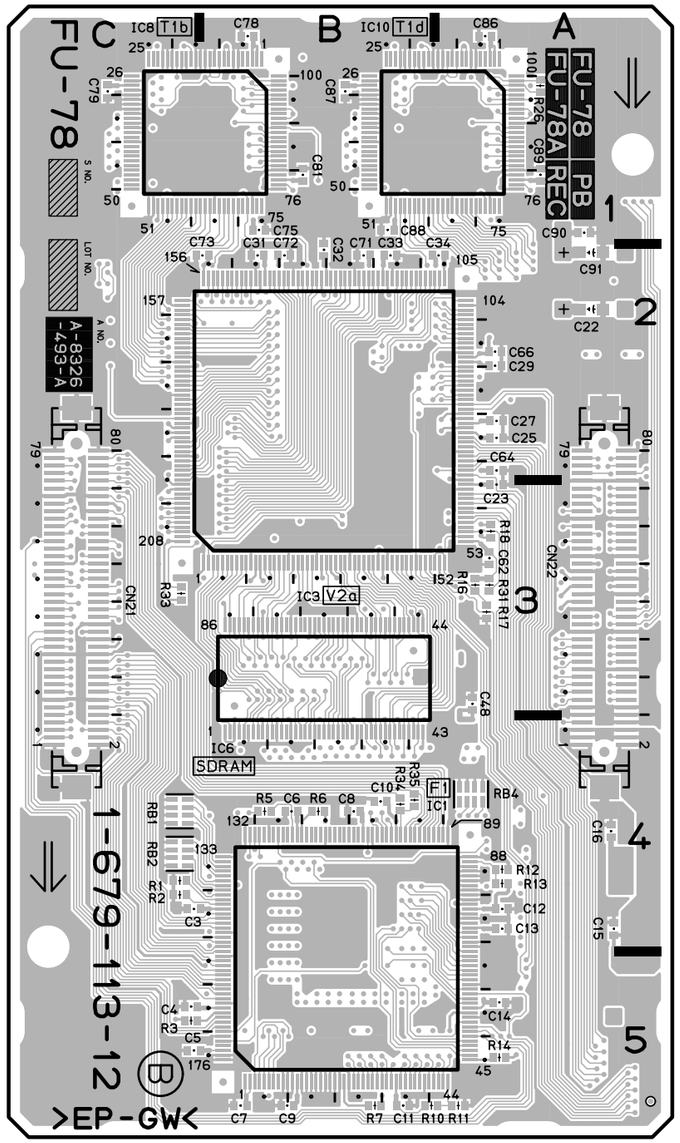

FU-78P/78R -B SIDE-

SUFFIX: -12

FU-78P: FOR DSR-1600/P
FOR DSR-1800/P
FU-78R: FOR DSR-1800/P

FU-78P/78R (1-679-113-12)

C1	A5	CL1	A4
C2	A5	CL2	C2
C3	*C4	CL4	A4
C4	*C5	CL5	C4
C5	*C5	CL6	A4
C6	*B4	CL10	A2
C7	*B5	CL12	C2
C8	*B4	CL13	C2
C9	*B5		
C10	*B4	CN11	C3
C11	*B5	CN12	A3
C12	*A4	CN21	*C3
C13	*A4	CN22	*A3
C14	*A5		
C15	*A4	IC1	*B5
C16	*A4	IC2	A4
C17	A4	IC3	*B2
C18	B3	IC4	B2
C19	B3	IC5	B4
C20	B3	IC6	*B4
C21	B3	IC7	B1
C22	*A2	IC8	*B1
C23	*A3	IC9	A1
C24	C2	IC10	*A1
C25	*A2		
C26	C2	L1	A5
C27	*A2	L2	A2
C28	C2	L3	A3
C29	*A2	L4	A2
C30	C2		
C31	*B2	R1	*C4
C32	*B2	R2	*C4
C33	*B2	R3	*C5
C34	*A2	R4	A2
C35	B5	R5	*B4
C36	B5	R6	*B4
C37	B5	R7	*B5
C38	B5	R8	A2
C39	C5	R9	A2
C40	A4	R10	*B5
C41	C4	R11	*A5
C42	A4	R12	*A4
C43	C4	R13	*A4
C44	A4	R14	*A5
C45	C4	R15	A4
C46	A4	R16	*A3
C47	B3	R17	*A3
C48	*A3	R18	*A3
C49	B3	R19	A2
C50	B3	R20	A2
C51	B3	R21	A2
C52	B3	R22	C2
C53	B3	R23	B1
C54	B3	R24	B1
C55	B3	R25	B1
C56	B3	R26	*A1
C57	B3	R27	A2
C58	B3	R28	A2
C59	B3	R29	A2
C60	B3	R30	A2
C61	B3	R31	*A3
C62	*A3	R32	C5
C63	C3	R33	*C3
C64	*A2	R34	*B4
C65	C3	R35	*B4
C66	*A2		
C67	C2	RB1	*C4
C68	A2	RB2	*C4
C69	C2	RB3	A5
C70	A2	RB4	*A4
C71	*B2		
C72	*B2	*:B SIDE	
C73	*B2		
C74	C1		
C75	*B1		
C76	B1		
C77	C1		
C78	*B1		
C79	*C1		
C80	C1		
C81	*B1		
C82	B1		
C83	A1		
C84	A1		
C85	B1		
C86	*A1		
C87	*B1		
C88	*B1		
C89	*A1		
C90	*A1		
C91	*A2		

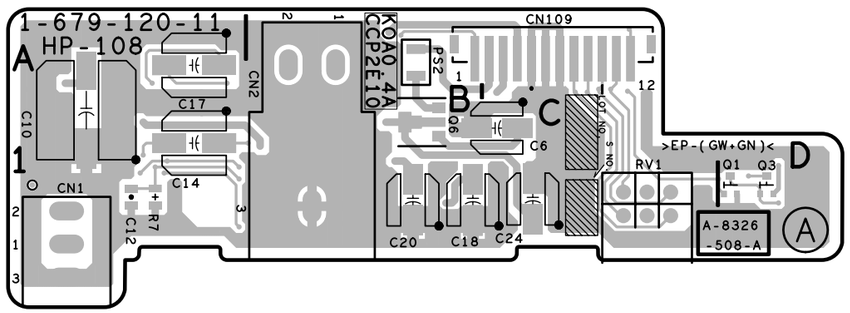

HP-108 -A SIDE-
SUFFIX: -11

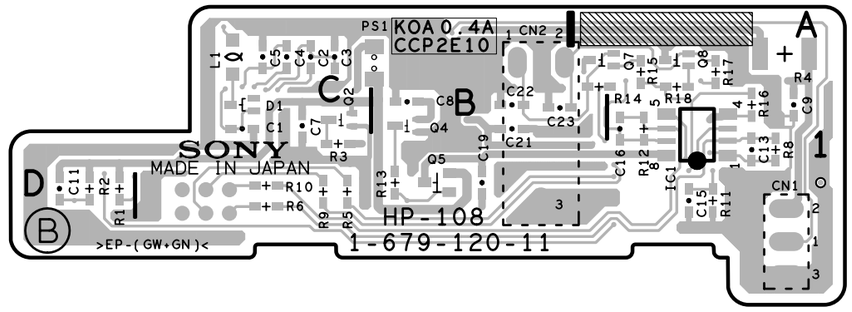

HP-108 -B SIDE-
SUFFIX: -11

HP-108 (1-679-120-11)

C1	*C1	R9	*C1
C2	*C1	R10	*C1
C3	*C1	R11	*A1
C4	*C1	R12	*A1
C5	*C1	R13	*B1
C6	C1	R14	*B1
C7	*C1	R15	*A1
C8	*B1	R16	*A1
C9	*A1	R17	*A1
C10	A1	R18	*A1
C11	*D1		
C12	A1	RV1	C1
C13	*A1		
C14	A1	*:B SIDE	
C15	*A1		
C16	*A1		
C17	A1		
C18	B1		
C19	*B1		
C20	B1		
C21	*B1		
C22	*B1		
C23	*B1		
C24	C1		
CN1	A1		
CN2	B1		
CN109	C1		
D1	*C1		
IC1	*A1		
L1	*C1		
PS1	*B1		
PS2	B1		
Q1	D1		
Q2	*C1		
Q3	D1		
Q4	*B1		
Q5	*B1		
Q6	B1		
Q7	*B1		
Q8	*A1		
R1	*D1		
R2	*D1		
R3	*C1		
R4	*A1		
R5	*C1		
R6	*C1		
R7	A1		
R8	*A1		

http://getMANUAL.com

IF-820 (1-679-102-13)

C31	E4	C313	*B3	C446	*B5	C736	*A4	C1002	F5	C1409	*G3	FL404	*B6	IC1153	*D5	Q202	C5	R211	C3	R309	B4	R440	*B5	R638	*G5	R779	*A3	R1210	*F3	RV206	C5
C200	*C4	C314	*B4	C532	A5	C737	*A4	C1004	F6	C1410	*G3	FL500	*A6	IC1202	F3	Q203	C5	R212	*C2	R310	*B4	R441	*B5	R639	*G5	R780	*A3	R1211	*F3	RV300	B4
C201	*C2	C315	*B4	C533	A5	C738	*A4	C1005	G3	C1411	*G3	FL700	A1	IC1203	F3	Q204	*C5	R213	*C3	R311	*B4	R442	*B6	R640	*G5	R781	*A2	R1212	*F3	RV301	B4
C202	C2	C316	B4	C534	*A5	C739	*A4	C1006	*G1	C1412	G2	FL701	B1	IC1251	F4	Q205	*C5	R214	C2	R312	*B4	R443	*B6	R641	*G6	R782	*A2	R1251	*F3	RV302	B4
C203	*C2	C317	B4	C535	*A5	C740	*A4	C1007	*G2	C1413	*G3	FL1001	F6	IC1252	F4	Q206	*C5	R215	C2	R313	*B4	R444	*B5	R642	*F6	R783	*A2	R1252	*F3	RV303	B4
C204	*C2	C318	B3	C536	A5	C741	*A1	C1008	*G2	C1414	G3	FL1002	G6	IC1253	*D5	Q207	*C5	R216	*C2	R314	*B3	R445	*B5	R643	*G6	R784	*A2	R1253	*F3	RV304	C3
C205	*C2	C319	B3	C537	*A5	C742	*A2	C1009	*G2	C1415	G3	FL1003	H6	IC1301	*F2	Q208	*C5	R217	*C3	R315	B4	R446	*B5	R644	*G5	R800	*B2	R1254	*F3	RV400	C5
C206	*C3	C320	*B4	C538	*A5	C743	*A1	C1010	*G2	C1451	G3	FL1004	H6	IC1302	F3	Q209	*C5	R218	*C2	R316	B4	R447	*B5	R645	*G5	R801	*B3	R1255	*F4	RV401	B5
C207	*C2	C321	*B4	C539	A5	C744	*A1	C1011	G2	C1452	G4	FL1005	H6	IC1303	F3	Q210	*C5	R219	*C2	R317	B4	R448	*B5	R646	*G5	R802	*B3	R1256	*F3	RV402	B5
C208	*C2	C322	*B4	C540	*A5	C745	*A1	C1012	G2	C1453	*G4	FL1151	D6	IC1351	F4	Q211	*C5	R220	*C2	R318	B4	R449	*B5	R647	*G6	R803	B2	R1257	*F4	RV403	B5
C209	*C2	C323	*B4	C541	A5	C746	*A1	C1013	G2	C1454	G4	FL1152	D6	IC1352	F4	Q212	*C5	R221	*C2	R319	*B4	R450	*B5	R648	*G6	R804	*B3	R1258	*F4	RV404	B6
C210	*C3	C324	*B3	C542	*A4	C747	*A1	C1014	G2	C1455	*G4	FL1251	D6	IC1353	*E5	Q213	*C5	R222	*C2	R320	*B4	R451	B5	R649	*G6	R805	B2	R1259	*F4	RV405	B5
C211	*C2	C325	*B3	C543	*A5	C748	*A1	C1015	*G3	C1456	*G4	FL1252	D6	IC1402	G3	Q214	*C5	R223	*C2	R321	*B3	R452	B5	R650	*G6	R806	*B3	R1260	*F4	RV500	A5
C212	C2	C326	*B4	C544	A5	C749	*A2	C1016	*G3	C1457	E5	FL1351	E6	IC1403	G3	Q215	*C5	R224	*C2	R322	*B3	R453	B5	R651	*G5	R807	*B3	R1261	*F4	RV501	A5
C213	*B2	C327	*B3	C545	A5	C750	*A2	C1017	*G3	C1458	E5	FL1352	E6	IC1406	G1	Q216	*C5	R225	C2	R323	*B3	R454	B5	R652	*G5	R808	*B3	R1262	*F4	RV502	A5
C214	*C2	C328	*B4	C546	*A5	C751	*A2	C1018	*G3	C1459	F5	FL1451	E6	IC1451	G4	Q217	*C5	R226	C2	R324	*B3	R455	B5	R702	A2	R810	*B3	R1263	*F4	RV600	G6
C215	B2	C329	B3	C547	A5	C752	*A2	C1019	*G3			FL1452	E6	IC1452	G4	Q218	*C2	R227	*C2	R325	*B3	R456	*B5	R703	A2	R811	*B3	R1264	D5	RV601	G6
C216	*C2	C330	B4	C550	*A6	C753	*A3	C1020	*G3	CL100	A1			IC1453	*E5	Q300	*B3	R228	*C2	R326	*B3	R457	B6	R704	A2	R812	*B3	R1265	D5	RV700	A2
C217	*C2	C331	*B4	C600	*G6	C754	*B2	C1021	F6	CL101	B1	IC200	*C2			Q301	*B3	R229	*C2	R327	*B4	R458	*B6	R705	A2	R813	*B3	R1266	*D6	RV701	A2
C218	C3	C332	B4	C601	*G6	C755	*B2	C1101	*F1	CL102	G1	IC201	C2	L200	B2	Q302	B3	R230	*C2	R328	*B3	R459	B5	R706	A2	R906	E2	R1267	*D6	RV1101	F3
C219	B2	C333	B4	C602	*G6	C756	*A2	C1102	*F2	CL200	C2	IC202	*C2	L201	C1	Q303	*B3	R231	*C2	R329	*B3	R461	B5	R707	A2	R907	E2	R1301	*F2	RV1201	F3
C220	*C2	C334	*B4	C603	*G6	C757	A3	C1103	*F2	CL201	B2	IC203	*C2	L202	C1	Q304	*C3	R232	C2	R330	*B3	R462	*B5	R708	A2	R908	E2	R1302	F2	RV1301	F3
C221	C2	C335	B4	C604	*G6	C758	A2	C1104	*F2	CL202	B2	IC204	*C1	L203	B2	Q305	B4	R233	C3	R331	B3	R500	*A5	R709	A1	R909	E2	R1303	*F2	RV1401	G3
C222	C2	C336	*B4	C605	*G5	C759	A2	C1105	*F2	CL701	A1	IC205	*D4	L204	B3	Q306	B4	R235	*C3	R332	B4	R501	A6	R710	*A3	R910	*E2	R1304	F2		
C223	B2	C337	*B4	C606	*G5	C760	A3	C1106	F2	CL703	A1	IC206	*C6	L205	C3	Q307	B3	R236	*C4	R333	B4	R502	*A5	R711	*A4	R911	*E2	R1305	*F3	THP300	*B4
C224	C2	C338	*B3	C607	*G5	C761	A3	C1107	F2	CL1001	G2	IC207	*C2	L206	C4	Q308	B3	R237	*C4	R334	*B4	R503	A5	R712	*A4	R912	*E2	R1306	*F3	THP610	G6
C225	C1	C339	*B3	C608	*G5	C762	A3	C1108	*F2	CL1101	F2	IC208	*B2	L207	C4	Q309	*B4	R238	D3	R335	B4	R504	*A5	R713	*A4	R913	*E3	R1307	*F3		
C226	C1	C340	B4	C609	*G5	C763	*A2	C1109	*F3	CL1301	F2	IC209	*C3	L208	C5	Q310	*A4	R239	C4	R336	B4	R505	*A5	R714	*A4	R914	*E3	R1308	*F3	TP200	B5
C227	*C2	C341	B3	C610	*G5	C764	*B3	C1110	*F3			IC210	*C6	L209	*C5	Q311	A4	R240	C4	R337	B4	R506	A5	R715	*A4	R1001	*G2	R1309	*F3	TP201	C5
C228	B2	C342	B3	C611	*G6	C765	A2	C1111	*F3	CN103	B1	IC300	*B4	L210	C5	Q312	A4	R241	C4	R338	B4	R507	A5	R716	*A4	R1002	G2	R1310	*F3	TP202	C5
C229	*C2	C343	B4	C612	*G5	C766	A3	C1112	F2	CN104	G1	IC301	*B4	L212	*C5	Q400	*C5	R242	C4	R339	B4	R508	*A5	R717	A3	R1003	G2	R1311	*F3	TP700	A3
C230	C2	C344	B3	C613	*G6	C767	A3	C1113	*F3	CN200	C6	IC302	*B3	L213	C5	Q401	*B5	R243	D4	R340	B3	R509	*A5	R718	A3	R1004	*G3	R1312	*F3	TP701	A2
C231	B2	C345	B3	C614	*G5	C800	*B2	C1114	F3	CN401	B6	IC303	*B4	L300	C4	Q402	*B5	R244	C5	R341	B3	R510	*A5	R719	A3	R1005	*G3	R1313	F1	TP702	A2
C232	C2	C346	B3	C615	*G5	C802	B2	C1115	F3	CN402	B6	IC304	*B4	L301	C4	Q403	*B5	R245	C5	R342	B3	R511	*A5	R720	A3	R1006	G2	R1351	*F3	TP703	A3
C233	B2	C347	B3	C616	*G5	C803	B2	C1116	*F2	CN403	C6	IC305	*B4	L302	*B3	Q404	*B5	R246	C5	R343	B3	R512	A5	R721	*A2	R1007	G2	R1352	*F3	TP704	A2
C234	B3	C348	B3	C617	*G6	C804	B2	C1117	*F1	CN501	A6	IC306	B4	L303	B4	Q405	*B5	R247	C5	R344	*B4	R513	A5	R722	*A2	R1008	*G3	R1353	*F3		
C235	*C1	C349	B3	C618	*G5	C805	B2	C1118	*G1	CN600	G6	IC307	*B4	L304	B3	Q406	*B5	R248	*C5	R345	B3	R514	A6	R723	A2	R1009	*G3	R1354	*F3	X200	C2
C236	C3	C350	*A4	C619	G5	C806	B2	C1151	F3	CN900	A6	IC400	C5	L305	B3	Q407	*B5	R249	*C5	R346	B3	R515	A5	R724	A2	R1011	*F5	R1355	*F4	X201	C2
C237	C4	C351	*B4	C620	G5	C807	*B3	C1152	F4	CN1001	H6	IC401	*B5	L306	B3	Q408	*B5	R250	*C5	R347	*B4	R516	*A5	R725	A3	R1012	G3	R1356	*F3	X202	C2
C238	C1	C352	*B4	C621	F5	C808	*B3	C1153	*F4	CN1004	F6	IC402	B5	L307	B3	Q409	*B5	R251	*C5	R348	*B4	R517	*A5	R726	*A2	R1013	G3	R1357	*F4	X700	A2
C239	*C1	C353	*B4	C622	*G5	C809	*B3	C1154	F4	CN1151	D6	IC403	*B5	L308	*B4	Q410	*B6	R252	*C5	R349	*B4	R518	*A5	R727	*A2	R1014	F6	R1358	*F4	X701	A2
C240	*C3	C354	*A4	C623	F5	C810	*B3	C1155	*F4	CN1251	D6	IC404	*B5	L309	*B4	Q500	*A5	R253	*C5	R350	*B4	R519	*A6	R728	*A2	R1016	F6	R1359	*F4		
C241	*C4	C355	*A4	C624	*F5	C811	*B3	C1156	*F4	CN1351	E6	IC405	*B5	L400	*C5	Q501	*A5	R254	*C5	R351	*A4	R520	*A5	R729	A2	R1017	G3	R1360	*F4	*:B SIDE	
C242	*C3	C356	A4	C625	*F6	C812	*B3	C1157	D5	CN1451	E6	IC406	B5	L401	*B5	Q502	A5	R255	*C5	R352	*B4	R521	*A5	R730	A2	R1018	*G3	R1361	*F4		
C243	*C2	C357	*C4	C626	F5	C814	*B3	C1158	D5			IC407	*B5	L402	B5	Q503	*A5	R256	*C5	R353	*A4	R522	*A5	R731	*A2	R1020	*F5	R1362	*F4		
C244	C4	C358	*C4	C627	*F5	C815	*B3	C1159	D5	D31	E4	IC506	*A5	L403	*B5	Q504	*A5	R257	*C5	R354	*A4	R523	*A5	R732	*A2	R1021	*F5	R1363	*F4		
C245	C5	C400	C5	C628	*G5	C817	B3	C1206	F2	D32	E4	IC507	*A5	L404	*B5	Q505	*A5	R258	*C5	R355	*A4	R524	*A6	R733	*A2	R1022	G1	R1364	E5		
C246	C5	C401	*C5	C629	*F5	C818	B3	C1207	F2	D33	E3	IC508	A5	L405	*B5	Q506	*A5	R259	*C5	R356	C3	R525	*A6	R734	*A2	R1023	G1	R1365	E5		
C247	C4	C402	B5	C630	G5	C820	*B3	C1208	*F2	D200	*C2	IC509	*A5	L505	*A5	Q507	*A5	R260	C5	R357	A4	R526	*A6	R735	*A2	R1024	G1	R1366	*E6		
C248	C4	C403	*B5	C631	G5	C821	B3	C1209	*F3	D201	*C2	IC600	*G6	L506	*A5	Q700	*A3	R261	C6	R358	A4	R527	*A5	R736	A3	R1025	G1	R1367	*E6		
C249	*D4	C404	*B5	C632	*G5	C822	*B2	C1210	*F3	D400	*B5	IC601	*G5	L507	*A5	Q701	*A4	R262	*C6	R359	*A4	R528	*A6	R737	A2	R1101	*F2	R1402	G2		
C250	*C4	C405	*C5	C633	*G6	C900	D1	C1211	*F3	D401	B5	IC602	*F5	L508	A5	Q702	*A2	R263	*C6	R360	*B4	R529	*A5	R738	*A4	R1102	F2	R1403	*G2		
C251	C4	C406	B5	C634	G5	C901	D2	C1212	F2	D600	*F6	IC603	*G5	L509	A4	Q703	A3	R264	*C6	R400	*B5	R530	*A5	R739	*B2	R1103	*F2	R1404	G2		
C252	C5	C407	C6	C635	G5	C902	D3	C1213	*F3	D700	*A1	IC604	G5	L600	G5	Q704	A1	R265	*C5	R401	*C5	R531	A5	R740	B3	R1104	F2	R1405	*G3		
C253	C5	C408	*B5	C636	G6	C903	D2	C1214	F3	D701	*A1	IC605	*F5	L601	G5	Q705	A1	R266	*C5	R402	*C5	R600	*G6	R741	A2	R1105	*F3	R1406	*G3		
C254	C5	C409	*B5	C637	F6	C904	D1	C1215	F3	D702	*A1	IC606	*G5	L700	B1	Q706	A1	R267	*C5	R403	*B5	R601	*G6	R742	A2	R1106	*F3	R1407	*G3		
C255	*C5	C410	C5	C638	G6	C905	D1	C1251	F3	D703	A1	IC607	*G5	L702	A3	Q800	*B3	R268	*C5	R404	*C5	R602	*G6	R743	*A4	R1107	*F3	R1408	*G3		
C256	*C5	C411	B6	C639	F6	C906	D2	C1252	F4	D900	D3	IC608	F6	L703	A4	Q801	*B3	R269	*C5	R405	B5	R603	*G6	R744	*A4	R1108	*F3	R1409	*G3		
C257	*C5	C412	B5	C700	B1	C907	D3	C1253	*F4	D901	D4	IC609	G6	L704	A4	Q802	*B3	R270	*C5	R406	B5	R604	*G6	R745	*A4	R1109	*F3	R1410	*G3		
C258	*C5	C413	B6	C701	B1	C908	D2	C1254	F4	D902	D2	IC700	A2	L705	*A4	Q900	E2	R271	*C5	R407	B5	R605	*G5	R746	*A1	R1110	*F3	R1411	*G3		
C259	*C6	C414	B5	C702	A1	C909	D1	C1255	*F4	D903	E2	IC701	A2	L706	*A4	Q901	E2	R272	*C5	R408	*B5	R606	*G5	R747	A1	R1111	*F3	R1412	*G3		
C261	*C5	C415	B5	C704	A3	C910	D1	C1256	*F4	D904	E2	IC704	*A4	L707	A1	Q902	E3	R273	*C5	R409	*B5	R607	*G5	R748	*A1	R1112	*F3	R1451	*G3		
C262	C5	C416	B5	C706	A3	C911	D1	C1257	D5	D905	E3	IC705	*A4	L708	A1	Q1001	F6	R274	*C5	R410	*B6	R608	*G6	R749	*A1	R1113	F1	R1452	*G3		
C263	*C5	C417	*B5	C707	A4	C912	D3	C1258	D5	D1151	*D5	IC706	*A4	L709	B2	Q1002	G3	R275	*C5	R411	B5	R609	*G5	R750	*A1	R1115	F1	R1453	*G3		
C264	C5	C418	*B5	C708	A4	C913	D3	C1259	D5	D1152	*D5	IC707	*A2	L710	*A1	Q1003	G3	R276	*C5	R412	B5	R610	*G5	R751	*A1	R1116	F1	R1454	*G3		
C265	*C5	C419	*B5	C709	A4	C914	D3	C1301	*F1	D1251	*D5	IC708	*A2	L711	A1	Q1151	*F4	R277	C5	R413	*C6	R611	*G5	R752	*A1	R1117	F1	R1455	*G4		
C266	*C5	C420	B5	C710	A4	C915	D4	C1302	*F2	D1252	*D5	IC709	*A2	L712	A3	Q1153	D6	R278	C6	R414	*C6	R612	*G6	R753	*A1	R1118	F1	R1456	*G3		
C267	*C5	C421	*B6	C711	*A4	C916	D3	C1303	*F2	D1351	*E5	IC710	*A4	L800	B2	Q1154	D6	R279	*C6	R415	B5	R613	*G6	R754	*A2	R1151	*F3	R1457	*G4		
C268	*C6	C422	*A5	C712	*A4	C917	D4	C1304	*F2	D1352	*E5	IC711	*A1	L802	B3	Q1251	*F4	R280	*C6	R416	B5	R614	*G6	R755	*A1	R1152	*F3	R1458	*G4		
C269	C2	C423	*A5	C713	*A4	C918	D1	C1305	*F2	D1451	*E5	IC712	*A1	L803	B3	Q1253	D6	R281	*C6	R417	*B5	R615	*G6	R756	A1	R1153	*F3	R1459	*G4		
C270	C2	C424	*B5	C714	*A4	C919	D2	C1306	F2	D1452	*F5	IC713	A2	L900	D1	Q1254	D6	R282	*C2	R418	*B5	R616	G6	R757	*B2	R1154	*F3	R1460	*G4		
C271	C2	C425	*B5	C715	*A4	C920	D1	C1307	F2			IC714	*A3	L901	D3	Q1351	*F4	R283	*C2	R419	*B5	R617	G6	R758	A1	R1155	*F4	R1461	*G4		
C272	*C2	C426	*B5	C716	*A4	C921	D2	C1308	*F2	E900	A5	IC715	*A2	L902	D1	Q1353	E6	R284	C2	R420	*B5	R618	G6	R759	*A2	R1156	*F3	R1462	*G4		
C273	*C2	C427	*B5	C717	*A4	C922	E2	C1309	*F3	E901	D3	IC716	*A3	L903	E2	Q1354	E6	R285	C2	R421	*B5	R619	G6	R760	*A2	R1157	*F4	R1463	*G4		
C274	C5	C428	*B5	C718	*A4	C923	E3	C1310	*F3	E902	G5	IC800	*B2	L904	E2	Q1451	*G4	R286	C2	R422	*B5	R620	G6	R761	*A3	R1158	*F4	R1464	E5		
C276	*B2	C429	*B5	C719	*A4	C924	E2	C1311	*F3	E903	*B3	IC900	D2	L905	E3	Q1453	E6	R287	C2	R423	*B5	R621	*F5	R762	*A3	R1159	*F4	R1465	E5		
C277	C6	C430	*B5	C720	*A2	C925	E2	C1312	F2	E904	A3	IC901	D3	L906	E3	Q1454	E6	R288	*C4	R424	*B5	R622	*F5	R763	*A2	R1160	*F4	R1466	*E6		
C278	C6	C431	*B5	C721	*A2	C926	E2	C1313	*F3	E905	*E3	IC902	D2	L911	E1			R289	*C4	R425	*B5	R623	*G5	R764	*A3	R1161	*F4	R1467	*F6		
C279	*C5	C432	*B5	C722	*A2	C927	E3	C1314	F3	E1101	*F2	IC903	E2			R31	E4	R290	*C3	R426	*A5	R624	*G5	R765	*A3	R1162	*F4				
C300	C4	C433	*B5	C723	*A2	C928	E2	C1315	F3	E1201	E3	IC904	E2	PS900	D1	R32	E4	R291	*C2	R427	*A5	R625	*G6	R766	*A3	R1163	*F4	RB700	A1		
C301	C4	C434	*B5	C724	*A2	C929	E2	C1351	F3			IC905	E2	PS901	D2	R33	E4	R292	*C2	R428	*B5	R626	*F6	R767	*A3	R1164	D5	RB701	A1		
C302	*B3	C435	*B5	C725	*A2	C930	E3	C1352	F4	FL100	*C6	IC1001	G3	PS902	D3	R34	E3	R293	*C2	R429	A6	R627	*G6	R768	A3	R1165	D5	RB702	B1		
C303	C4	C436	*B5	C726	*A2	C931	E1	C1353	*F4	FL200	D4	IC1002	F5	PS903	D2	R201	C2	R294	*C2	R430	*B6	R628	*G6	R769	A3	R1166	*D6	RB1002	*G1		
C304	C4	C437	B5	C727	A1	C932	E3	C1354	F4	FL201	C4	IC1003	G3	PS904	D2	R202	*C2	R300	*C4	R431	*B5	R629	*G5	R770	A2	R1167	*D6	RB1101	*F1		
C305	B3	C438	B5	C728	A1	C933	E3	C1355	*F4	FL202	C4	IC1005	*G2	PS905	D1	R203	*C2	R301	*B3	R432	*B5	R630	F5	R771	A2	R1202	F2	RB1301	*F1		
C306	*C4	C439	*B5	C729	*A2	C934	E2	C1356	*F4	FL203	*C6	IC1101	*F2			R204	*C2	R302	*C4	R433	*B5	R631	F5	R772	*A2	R1203	*F2				
C307	*C4	C440	*B5	C730	A1	C935	*E2	C1357	E5	FL204	*C6	IC1102	F3	Q31	E4	R205	*C2	R303	*C4	R434	*B5	R632	*G5	R773	*A3	R1204	F2	RV200	C2		
C308	*B3	C441	B6	C731	*A2	C936	*E3	C1358	E5	FL300	B4	IC1103	F3	Q32	E4	R206	*C2	R304	*C4	R435	*B5	R633	F5	R774	*A3	R1205	*F3	RV201	C2		
C309	*B4	C442	B5	C732	*A2	C937	E2	C1359	E5	FL400	*B6	IC1104	F1	Q33	E4	R207	*C2	R305	*B3	R436	*B5	R634	*G5	R775	*A3	R1206	*F3	RV202	C2		
C310	*B4	C443	*B5	C733	B2	C938	E2	C1406	G2	FL401	*B6	IC1105	F1	Q34	E4	R208	*C2	R306	B4	R437	*B5	R635	F5	R776	A2	R1207	*F3	RV203	C5		
C311	*B4	C444	*B5	C734	B2	C939	E3	C1407	G2	FL402	*C6	IC1151	F4	Q200	C4	R209	*C2	R307	B4	R438	*B5	R636	F5	R777	A3	R1208	*F3	RV204	C5		
C312	*B4	C445	*B5	C735	*A4	C1001	*F5	C1408	*G2	FL403	*B6	IC1152	F4	Q201	C4	R210	C2	R308	B4	R439	*B5	R637	*F5	R778	A3	R1209	*F3	RV205	C5		

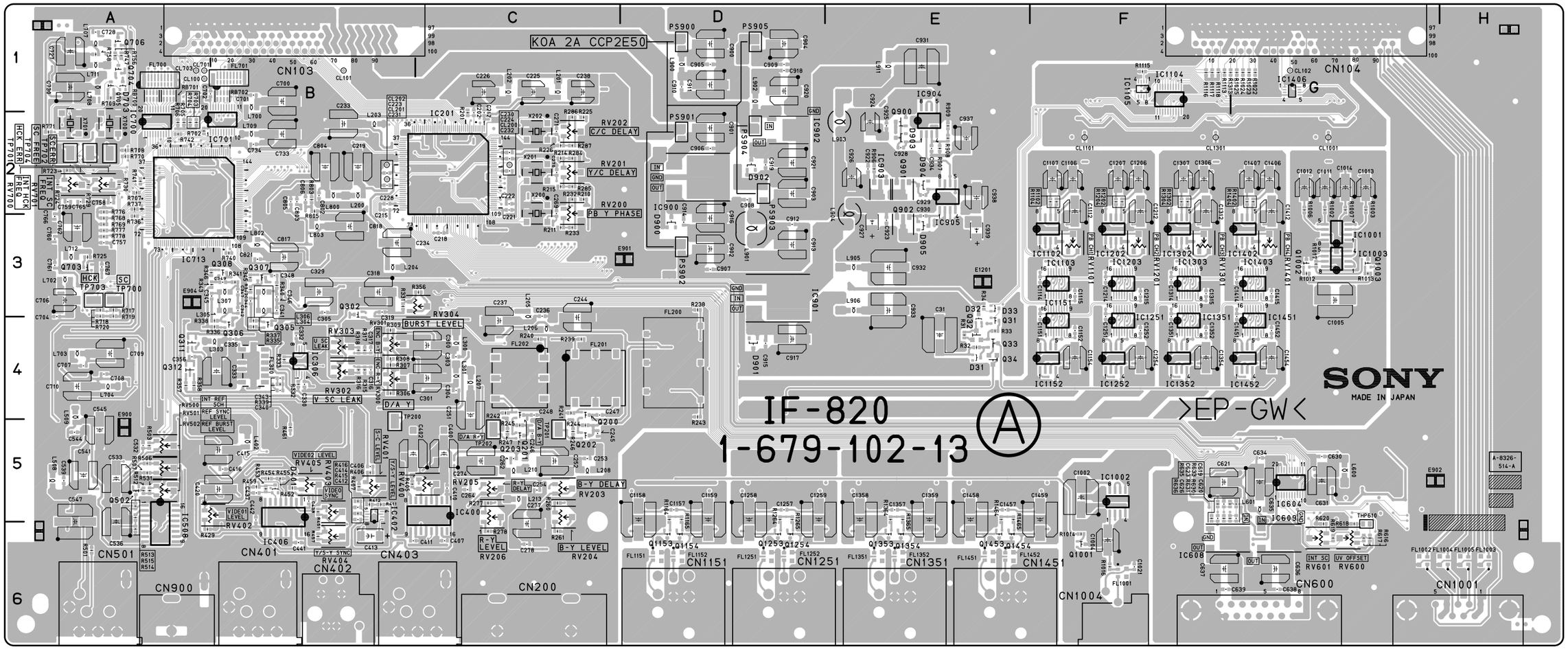

IF-820 -A SIDE-
SUFFIX: -13
FOR DSR-1600/P

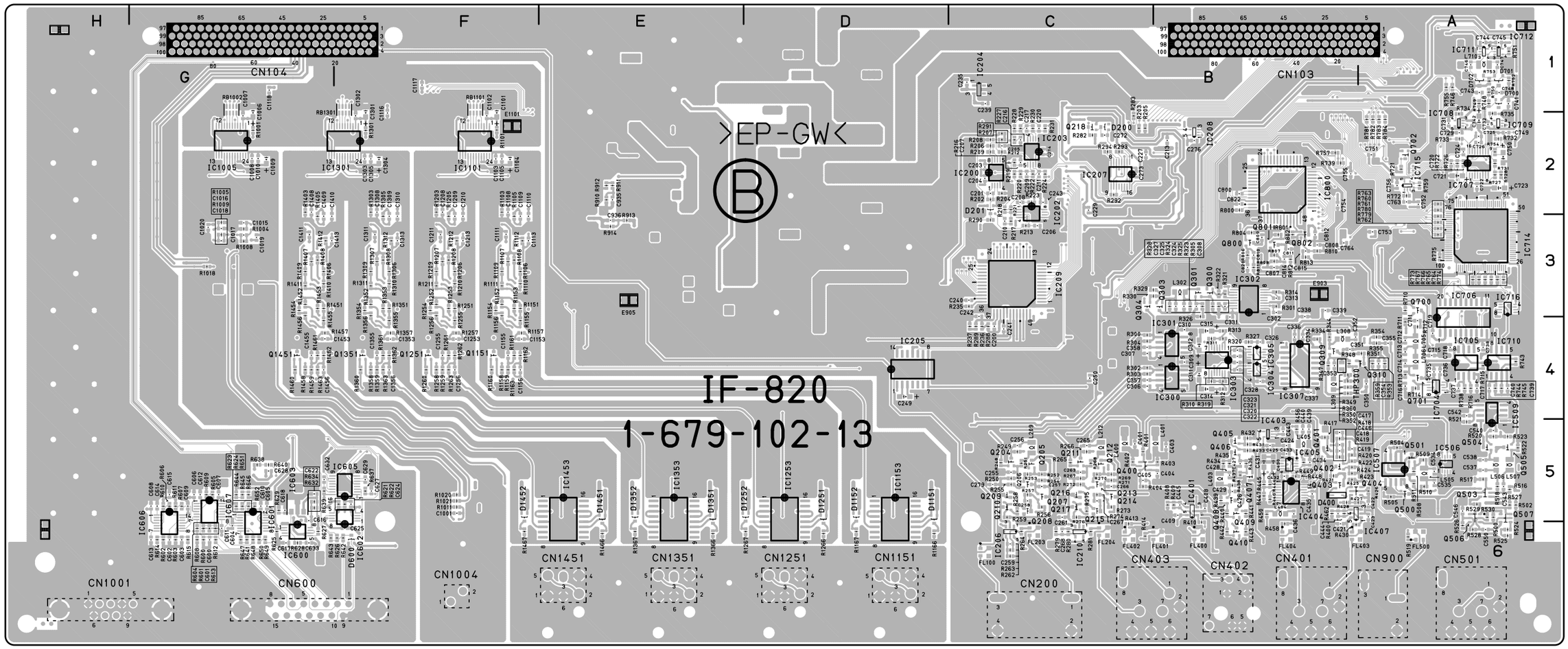

IF-820 -B SIDE-
SUFFIX: -13
FOR DSR-1600/P

IF-820 (1-679-102-12)

C31	E4	C313	*B3	C446	*B5	C736	*A4	C1002	F5	C1409	*G3	FL404	*B6	IC1153	*D5	Q202	C5	R211	C3	R309	B4	R440	*B5	R638	*G5	R779	*A3	R1210	*F3	RV206	C5
C200	*C4	C314	*B4	C532	A5	C737	*A4	C1004	F6	C1410	*G3	FL500	*A6	IC1202	F3	Q203	C5	R212	*C2	R310	*B4	R441	*B5	R639	*G5	R780	*A3	R1211	*F3	RV300	B4
C201	*C2	C315	*B4	C533	A5	C738	*A4	C1005	G3	C1411	*G3	FL700	A1	IC1203	F3	Q204	*C5	R213	*C3	R311	*B4	R442	*B6	R640	*G5	R781	*A2	R1212	*F3	RV301	B4
C202	C2	C316	B4	C534	*A5	C739	*A4	C1006	*G1	C1412	G2	FL701	B1	IC1251	F4	Q205	*C5	R214	C2	R312	*B4	R443	*B6	R641	*G6	R782	*A2	R1251	*F3	RV302	B4
C203	*C2	C317	B4	C535	*A5	C740	*A4	C1007	*G2	C1413	*G3	FL1001	F6	IC1252	F4	Q206	*C5	R215	C2	R313	*B4	R444	*B5	R642	*F6	R783	*A2	R1252	*F3	RV303	B4
C204	*C2	C318	B3	C536	A5	C741	*A1	C1008	*G2	C1414	G3	FL1002	G6	IC1253	*D5	Q207	*C5	R216	*C2	R314	*B3	R445	*B5	R643	*G6	R784	*A2	R1253	*F3	RV304	C3
C205	*C2	C319	B3	C537	*A5	C742	*A2	C1009	*G2	C1415	G3	FL1003	H6	IC1301	*F2	Q208	*C5	R217	*C3	R315	B4	R446	*B5	R644	*G5	R800	*B2	R1254	*F3	RV400	C5
C206	*C3	C320	*B4	C538	*A5	C743	*A1	C1010	*G2	C1451	G3	FL1004	H6	IC1302	F3	Q209	*C5	R218	*C2	R316	B4	R447	*B5	R645	*G5	R801	*B3	R1255	*F4	RV401	B5
C207	*C2	C321	*B4	C539	A5	C744	*A1	C1011	G2	C1452	G4	FL1005	H6	IC1303	F3	Q210	*C5	R219	*C2	R317	B4	R448	*B5	R646	*G5	R802	*B3	R1256	*F3	RV402	B5
C208	*C2	C322	*B4	C540	*A5	C745	*A1	C1012	G2	C1453	*G4	FL1151	D6	IC1351	F4	Q211	*C5	R220	*C2	R318	B4	R449	*B5	R647	*G6	R803	B2	R1257	*F4	RV403	B5
C209	*C2	C323	*B4	C541	A5	C746	*A1	C1013	G2	C1454	G4	FL1152	D6	IC1352	F4	Q212	*C5	R221	*C2	R319	*B4	R450	*B5	R648	*G6	R804	*B3	R1258	*F4	RV404	B6
C210	*C3	C324	*B3	C542	*A4	C747	*A1	C1014	G2	C1455	*G4	FL1251	D6	IC1353	*E5	Q213	*C5	R222	*C2	R320	*B4	R451	B5	R649	*G6	R805	B2	R1259	*F4	RV405	B5
C211	*C2	C325	*B3	C543	*A5	C748	*A1	C1015	*G3	C1456	*G4	FL1252	D6	IC1402	G3	Q214	*C5	R223	*C2	R321	*B3	R452	B5	R650	*G6	R806	*B3	R1260	*F4	RV500	A5
C212	C2	C326	*B4	C544	A5	C749	*A2	C1016	*G3	C1457	E5	FL1351	E6	IC1403	G3	Q215	*C5	R224	*C2	R322	*B3	R453	B5	R651	*G5	R807	*B3	R1261	*F4	RV501	A5
C213	*B2	C327	*B3	C545	A5	C750	*A2	C1017	*G3	C1458	E5	FL1352	E6	IC1406	G1	Q216	*C5	R225	C2	R323	*B3	R454	B5	R652	*G5	R808	*B3	R1262	*F4	RV502	A5
C214	*C2	C328	*B4	C546	*A5	C751	*A2	C1018	*G3	C1459	F5	FL1451	E6	IC1451	G4	Q217	*C5	R226	C2	R324	*B3	R455	B5	R702	A2	R810	*B3	R1263	*F4	RV600	G6
C215	B2	C329	B3	C547	A5	C752	*A2	C1019	*G3			FL1452	E6	IC1452	G4	Q218	*C2	R227	*C2	R325	*B3	R456	*B5	R703	A2	R811	*B3	R1264	D5	RV601	G6
C216	*C2	C330	B4	C550	*A6	C753	*A3	C1020	*G3	CL100	A1			IC1453	*E5	Q300	*B3	R228	*C2	R326	*B3	R457	B6	R704	A2	R812	*B3	R1265	D5	RV700	A2
C217	*C2	C331	*B4	C600	*G6	C754	*B2	C1021	F6	CL101	B1	IC200	*C2			Q301	*B3	R229	*C2	R327	*B4	R458	*B6	R705	A2	R813	*B3	R1266	*D6	RV701	A2
C218	C3	C332	B4	C601	*G6	C755	*B2	C1101	*F1	CL102	G1	IC201	C2	L200	B2	Q302	B3	R230	*C2	R328	*B3	R459	B5	R706	A2	R906	E2	R1267	*D6	RV1101	F3
C219	B2	C333	B4	C602	*G6	C756	*A2	C1102	*F2	CL200	C2	IC202	*C2	L201	C1	Q303	*B3	R231	*C2	R329	*B3	R461	B5	R707	A2	R907	E2	R1301	*F2	RV1201	F3
C220	*C2	C334	*B4	C603	*G6	C757	A3	C1103	*F2	CL201	B2	IC203	*C2	L202	C1	Q304	*C3	R232	C2	R330	*B3	R462	*B5	R708	A2	R908	E2	R1302	F2	RV1301	F3
C221	C2	C335	B4	C604	*G6	C758	A2	C1104	*F2	CL202	B2	IC204	*C1	L203	B2	Q305	B4	R233	C3	R331	B3	R500	*A5	R709	A1	R909	E2	R1303	*F2	RV1401	G3
C222	C2	C336	*B4	C605	*G5	C759	A2	C1105	*F2	CL701	A1	IC205	*D4	L204	B3	Q306	B4	R235	*C3	R332	B4	R501	A6	R710	*A3	R910	*E2	R1304	F2		
C223	B2	C337	*B4	C606	*G5	C760	A3	C1106	F2	CL703	A1	IC206	*C6	L205	C3	Q307	B3	R236	*C4	R333	B4	R502	*A5	R711	*A4	R911	*E2	R1305	*F3	THP300	*B4
C224	C2	C338	*B3	C607	*G5	C761	A3	C1107	F2	CL1001	G2	IC207	*C2	L206	C4	Q308	B3	R237	*C4	R334	*B4	R503	A5	R712	*A4	R912	*E2	R1306	*F3	THP610	G6
C225	C1	C339	*B3	C608	*G5	C762	A3	C1108	*F2	CL1101	F2	IC208	*B2	L207	C4	Q309	*B4	R238	D3	R335	B4	R504	*A5	R713	*A4	R913	*E3	R1307	*F3		
C226	C1	C340	B4	C609	*G5	C763	*A2	C1109	*F3	CL1301	F2	IC209	*C3	L208	C5	Q310	*A4	R239	C4	R336	B4	R505	*A5	R714	*A4	R914	*E3	R1308	*F3	TP200	B5
C227	*C2	C341	B3	C610	*G5	C764	*B3	C1110	*F3			IC210	*C6	L209	*C5	Q311	A4	R240	C4	R337	B4	R506	A5	R715	*A4	R1001	*G2	R1309	*F3	TP201	C5
C228	B2	C342	B3	C611	*G6	C765	A2	C1111	*F3	CN103	B1	IC300	*B4	L210	C5	Q312	A4	R241	C4	R338	B4	R507	A5	R716	*A4	R1002	G2	R1310	*F3	TP202	C5
C229	*C2	C343	B4	C612	*G5	C766	A3	C1112	F2	CN104	G1	IC301	*B4	L212	*C5	Q400	*C5	R242	C4	R339	B4	R508	*A5	R717	A3	R1003	G2	R1311	*F3	TP700	A3
C230	C2	C344	B3	C613	*G6	C767	A3	C1113	*F3	CN200	C6	IC302	*B3	L213	C5	Q401	*B5	R243	D4	R340	B3	R509	*A5	R718	A3	R1004	*G3	R1312	*F3	TP701	A2
C231	B2	C345	B3	C614	*G5	C800	*B2	C1114	F3	CN401	B6	IC303	*B4	L300	C4	Q402	*B5	R244	C5	R341	B3	R510	*A5	R719	A3	R1005	*G3	R1313	F1	TP702	A2
C232	C2	C346	B3	C615	*G5	C802	B2	C1115	F3	CN402	B6	IC304	*B4	L301	C4	Q403	*B5	R245	C5	R342	B3	R511	*A5	R720	A3	R1006	G2	R1351	*F3	TP703	A3
C233	B2	C347	B3	C616	*G5	C803	B2	C1116	*F2	CN403	C6	IC305	*B4	L302	*B3	Q404	*B5	R246	C5	R343	B3	R512	A5	R721	*A2	R1007	G2	R1352	*F3	TP704	A2
C234	B3	C348	B3	C617	*G6	C804	B2	C1117	*F1	CN501	A6	IC306	B4	L303	B4	Q405	*B5	R247	C5	R344	*B4	R513	A5	R722	*A2	R1008	*G3	R1353	*F3		
C235	*C1	C349	B3	C618	*G5	C805	B2	C1118	*G1	CN600	G6	IC307	*B4	L304	B3	Q406	*B5	R248	*C5	R345	B3	R514	A6	R723	A2	R1009	*G3	R1354	*F3	X200	C2
C236	C3	C350	*A4	C619	G5	C806	B2	C1151	F3	CN900	A6	IC400	C5	L305	B3	Q407	*B5	R249	*C5	R346	B3	R515	A5	R724	A2	R1011	*F5	R1355	*F4	X201	C2
C237	C4	C351	*B4	C620	G5	C807	*B3	C1152	F4	CN1001	H6	IC401	*B5	L306	B3	Q408	*B5	R250	*C5	R347	*B4	R516	*A5	R725	A3	R1012	G3	R1356	*F3	X202	C2
C238	C1	C352	*B4	C621	F5	C808	*B3	C1153	*F4	CN1004	F6	IC402	B5	L307	B3	Q409	*B5	R251	*C5	R348	*B4	R517	*A5	R726	*A2	R1013	G3	R1357	*F4	X700	A2
C239	*C1	C353	*B4	C622	*G5	C809	*B3	C1154	F4	CN1151	D6	IC403	*B5	L308	*B4	Q410	*B6	R252	*C5	R349	*B4	R518	*A5	R727	*A2	R1014	F6	R1358	*F4	X701	A2
C240	*C3	C354	*A4	C623	F5	C810	*B3	C1155	*F4	CN1251	D6	IC404	*B5	L309	*B4	Q500	*A5	R253	*C5	R350	*B4	R519	*A6	R728	*A2	R1016	F6	R1359	*F4		
C241	*C4	C355	*A4	C624	*F5	C811	*B3	C1156	*F4	CN1351	E6	IC405	*B5	L400	*C5	Q501	*A5	R254	*C5	R351	*A4	R520	*A5	R729	A2	R1017	G3	R1360	*F4	*:B SIDE	
C242	*C3	C356	A4	C625	*F6	C812	*B3	C1157	D5	CN1451	E6	IC406	B5	L401	*B5	Q502	A5	R255	*C5	R352	*B4	R521	*A5	R730	A2	R1018	*G3	R1361	*F4		
C243	*C2	C357	*C4	C626	F5	C814	*B3	C1158	D5			IC407	*B5	L402	B5	Q503	*A5	R256	*C5	R353	*A4	R522	*A5	R731	*A2	R1020	*F5	R1362	*F4		
C244	C4	C358	*C4	C627	*F5	C815	*B3	C1159	D5	D31	E4	IC506	*A5	L403	*B5	Q504	*A5	R257	*C5	R354	*A4	R523	*A5	R732	*A2	R1021	*F5	R1363	*F4		
C245	C5	C400	C5	C628	*G5	C817	B3	C1206	F2	D32	E4	IC507	*A5	L404	*B5	Q505	*A5	R258	*C5	R355	*A4	R524	*A6	R733	*A2	R1022	G1	R1364	E5		
C246	C5	C401	*C5	C629	*F5	C818	B3	C1207	F2	D33	E3	IC508	A5	L405	*B5	Q506	*A5	R259	*C5	R356	C3	R525	*A6	R734	*A2	R1023	G1	R1365	E5		
C247	C4	C402	B5	C630	G5	C820	*B3	C1208	*F2	D200	*C2	IC509	*A5	L505	*A5	Q507	*A5	R260	C5	R357	A4	R526	*A6	R735	*A2	R1024	G1	R1366	*E6		
C248	C4	C403	*B5	C631	G5	C821	B3	C1209	*F3	D201	*C2	IC600	*G6	L506	*A5	Q700	*A3	R261	C6	R358	A4	R527	*A5	R736	A3	R1025	G1	R1367	*E6		
C249	*D4	C404	*B5	C632	*G5	C822	*B2	C1210	*F3	D400	*B5	IC601	*G5	L507	*A5	Q701	*A4	R262	*C6	R359	*A4	R528	*A6	R737	A2	R1101	*F2	R1402	G2		
C250	*C4	C405	*C5	C633	*G6	C900	D1	C1211	*F3	D401	B5	IC602	*F5	L508	A5	Q702	*A2	R263	*C6	R360	*B4	R529	*A5	R738	*A4	R1102	F2	R1403	*G2		
C251	C4	C406	B5	C634	G5	C901	D2	C1212	F2	D600	*F6	IC603	*G5	L509	A4	Q703	A3	R264	*C6	R400	*B5	R530	*A5	R739	*B2	R1103	*F2	R1404	G2		
C252	C5	C407	C6	C635	G5	C902	D3	C1213	*F3	D700	*A1	IC604	G5	L600	G5	Q704	A1	R265	*C5	R401	*C5	R531	A5	R740	B3	R1104	F2	R1405	*G3		
C253	C5	C408	*B5	C636	G6	C903	D2	C1214	F3	D701	*A1	IC605	*F5	L601	G5	Q705	A1	R266	*C5	R402	*C5	R600	*G6	R741	A2	R1105	*F3	R1406	*G3		
C254	C5	C409	*B5	C637	F6	C904	D1	C1215	F3	D702	*A1	IC606	*G5	L700	B1	Q706	A1	R267	*C5	R403	*B5	R601	*G6	R742	A2	R1106	*F3	R1407	*G3		
C255	*C5	C410	C5	C638	G6	C905	D1	C1251	F3	D703	A1	IC607	*G5	L702	A3	Q800	*B3	R268	*C5	R404	*C5	R602	*G6	R743	*A4	R1107	*F3	R1408	*G3		
C256	*C5	C411	B6	C639	F6	C906	D2	C1252	F4	D900	D3	IC608	F6	L703	A4	Q801	*B3	R269	*C5	R405	B5	R603	*G6	R744	*A4	R1108	*F3	R1409	*G3		
C257	*C5	C412	B5	C700	B1	C907	D3	C1253	*F4	D901	D4	IC609	G6	L704	A4	Q802	*B3	R270	*C5	R406	B5	R604	*G6	R745	*A4	R1109	*F3	R1410	*G3		
C258	*C5	C413	B6	C701	B1	C908	D2	C1254	F4	D902	D2	IC700	A2	L705	*A4	Q900	E2	R271	*C5	R407	B5	R605	*G5	R746	*A1	R1110	*F3	R1411	*G3		
C259	*C6	C414	B5	C702	A1	C909	D1	C1255	*F4	D903	E2	IC701	A2	L706	*A4	Q901	E2	R272	*C5	R408	*B5	R606	*G5	R747	A1	R1111	*F3	R1412	*G3		
C261	*C5	C415	B5	C704	A3	C910	D1	C1256	*F4	D904	E2	IC704	*A4	L707	A1	Q902	E3	R273	*C5	R409	*B5	R607	*G5	R748	*A1	R1112	*F3	R1451	*G3		
C262	C5	C416	B5	C706	A3	C911	D1	C1257	D5	D905	E3	IC705	*A4	L708	A1	Q1001	F6	R274	*C5	R410	*B6	R608	*G6	R749	*A1	R1113	F1	R1452	*G3		
C263	*C5	C417	*B5	C707	A4	C912	D3	C1258	D5	D1151	*D5	IC706	*A4	L709	B2	Q1002	G3	R275	*C5	R411	B5	R609	*G5	R750	*A1	R1115	F1	R1453	*G3		
C264	C5	C418	*B5	C708	A4	C913	D3	C1259	D5	D1152	*D5	IC707	*A2	L710	*A1	Q1003	G3	R276	*C5	R412	B5	R610	*G5	R751	*A1	R1116	F1	R1454	*G3		
C265	*C5	C419	*B5	C709	A4	C914	D3	C1301	*F1	D1251	*D5	IC708	*A2	L711	A1	Q1151	*F4	R277	C5	R413	*C6	R611	*G5	R752	*A1	R1117	F1	R1455	*G4		
C266	*C5	C420	B5	C710	A4	C915	D4	C1302	*F2	D1252	*D5	IC709	*A2	L712	A3	Q1153	D6	R278	C6	R414	*C6	R612	*G6	R753	*A1	R1118	F1	R1456	*G3		
C267	*C5	C421	*B6	C711	*A4	C916	D3	C1303	*F2	D1351	*E5	IC710	*A4	L800	B2	Q1154	D6	R279	*C6	R415	B5	R613	*G6	R754	*A2	R1151	*F3	R1457	*G4		
C268	*C6	C422	*A5	C712	*A4	C917	D4	C1304	*F2	D1352	*E5	IC711	*A1	L802	B3	Q1251	*F4	R280	*C6	R416	B5	R614	*G6	R755	*A1	R1152	*F3	R1458	*G4		
C269	C2	C423	*A5	C713	*A4	C918	D1	C1305	*F2	D1451	*E5	IC712	*A1	L803	B3	Q1253	D6	R281	*C6	R417	*B5	R615	*G6	R756	A1	R1153	*F3	R1459	*G4		
C270	C2	C424	*B5	C714	*A4	C919	D2	C1306	F2	D1452	*F5	IC713	A2	L900	D1	Q1254	D6	R282	*C2	R418	*B5	R616	G6	R757	*B2	R1154	*F3	R1460	*G4		
C271	C2	C425	*B5	C715	*A4	C920	D1	C1307	F2			IC714	*A3	L901	D3	Q1351	*F4	R283	*C2	R419	*B5	R617	G6	R758	A1	R1155	*F4	R1461	*G4		
C272	*C2	C426	*B5	C716	*A4	C921	D2	C1308	*F2	E900	A5	IC715	*A2	L902	D1	Q1353	E6	R284	C2	R420	*B5	R618	G6	R759	*A2	R1156	*F3	R1462	*G4		
C273	*C2	C427	*B5	C717	*A4	C922	E2	C1309	*F3	E901	D3	IC716	*A3	L903	E2	Q1354	E6	R285	C2	R421	*B5	R619	G6	R760	*A2	R1157	*F4	R1463	*G4		
C274	C5	C428	*B5	C718	*A4	C923	E3	C1310	*F3	E902	G5	IC800	*B2	L904	E2	Q1451	*G4	R286	C2	R422	*B5	R620	G6	R761	*A3	R1158	*F4	R1464	E5		
C276	*B2	C429	*B5	C719	*A4	C924	E2	C1311	*F3	E903	*B3	IC900	D2	L905	E3	Q1453	E6	R287	C2	R423	*B5	R621	*F5	R762	*A3	R1159	*F4	R1465	E5		
C277	C6	C430	*B5	C720	*A2	C925	E2	C1312	F2	E904	A3	IC901	D3	L906	E3	Q1454	E6	R288	*C4	R424	*B5	R622	*F5	R763	*A2	R1160	*F4	R1466	*E6		
C278	C6	C431	*B5	C721	*A2	C926	E2	C1313	*F3	E905	*E3	IC902	D2	L911	E1			R289	*C4	R425	*B5	R623	*G5	R764	*A3	R1161	*F4	R1467	*F6		
C279	*C5	C432	*B5	C722	*A2	C927	E3	C1314	F3	E1101	*F2	IC903	E2			R31	E4	R290	*C3	R426	*A5	R624	*G5	R765	*A3	R1162	*F4				
C300	C4	C433	*B5	C723	*A2	C928	E2	C1315	F3	E1201	E3	IC904	E2	PS900	D1	R32	E4	R291	*C2	R427	*A5	R625	*G6	R766	*A3	R1163	*F4	RB700	A1		
C301	C4	C434	*B5	C724	*A2	C929	E2	C1351	F3			IC905	E2	PS901	D2	R33	E4	R292	*C2	R428	*B5	R626	*F6	R767	*A3	R1164	D5	RB701	A1		
C302	*B3	C435	*B5	C725	*A2	C930	E3	C1352	F4	FL100	*C6	IC1001	G3	PS902	D3	R34	E3	R293	*C2	R429	A6	R627	*G6	R768	A3	R1165	D5	RB702	B1		
C303	C4	C436	*B5	C726	*A2	C931	E1	C1353	*F4	FL200	D4	IC1002	F5	PS903	D2	R201	C2	R294	*C2	R430	*B6	R628	*G6	R769	A3	R1166	*D6	RB1002	*G1		
C304	C4	C437	B5	C727	A1	C932	E3	C1354	F4	FL201	C4	IC1003	G3	PS904	D2	R202	*C2	R300	*C4	R431	*B5	R629	*G5	R770	A2	R1167	*D6	RB1101	*F1		
C305	B3	C438	B5	C728	A1	C933	E3	C1355	*F4	FL202	C4	IC1005	*G2	PS905	D1	R203	*C2	R301	*B3	R432	*B5	R630	F5	R771	A2	R1202	F2	RB1301	*F1		
C306	*C4	C439	*B5	C729	*A2	C934	E2	C1356	*F4	FL203	*C6	IC1101	*F2			R204	*C2	R302	*C4	R433	*B5	R631	F5	R772	*A2	R1203	*F2				
C307	*C4	C440	*B5	C730	A1	C935	*E2	C1357	E5	FL204	*C6	IC1102	F3	Q31	E4	R205	*C2	R303	*C4	R434	*B5	R632	*G5	R773	*A3	R1204	F2	RV200	C2		
C308	*B3	C441	B6	C731	*A2	C936	*E3	C1358	E5	FL300	B4	IC1103	F3	Q32	E4	R206	*C2	R304	*C4	R435	*B5	R633	F5	R774	*A3	R1205	*F3	RV201	C2		
C309	*B4	C442	B5	C732	*A2	C937	E2	C1359	E5	FL400	*B6	IC1104	F1	Q33	E4	R207	*C2	R305	*B3	R436	*B5	R634	*G5	R775	*A3	R1206	*F3	RV202	C2		
C310	*B4	C443	*B5	C733	B2	C938	E2	C1406	G2	FL401	*B6	IC1105	F1	Q34	E4	R208	*C2	R306	B4	R437	*B5	R635	F5	R776	A2	R1207	*F3	RV203	C5		
C311	*B4	C444	*B5	C734	B2	C939	E3	C1407	G2	FL402	*C6	IC1151	F4	Q200	C4	R209	*C2	R307	B4	R438	*B5	R636	F5	R777	A3	R1208	*F3	RV204	C5		
C312	*B4	C445	*B5	C735	*A4	C1001	*F5	C1408	*G2	FL403	*B6	IC1152	F4	Q201	C4	R210	C2	R308	B4	R439	*B5	R637	*F5	R778	A3	R1209	*F3	RV205	C5		

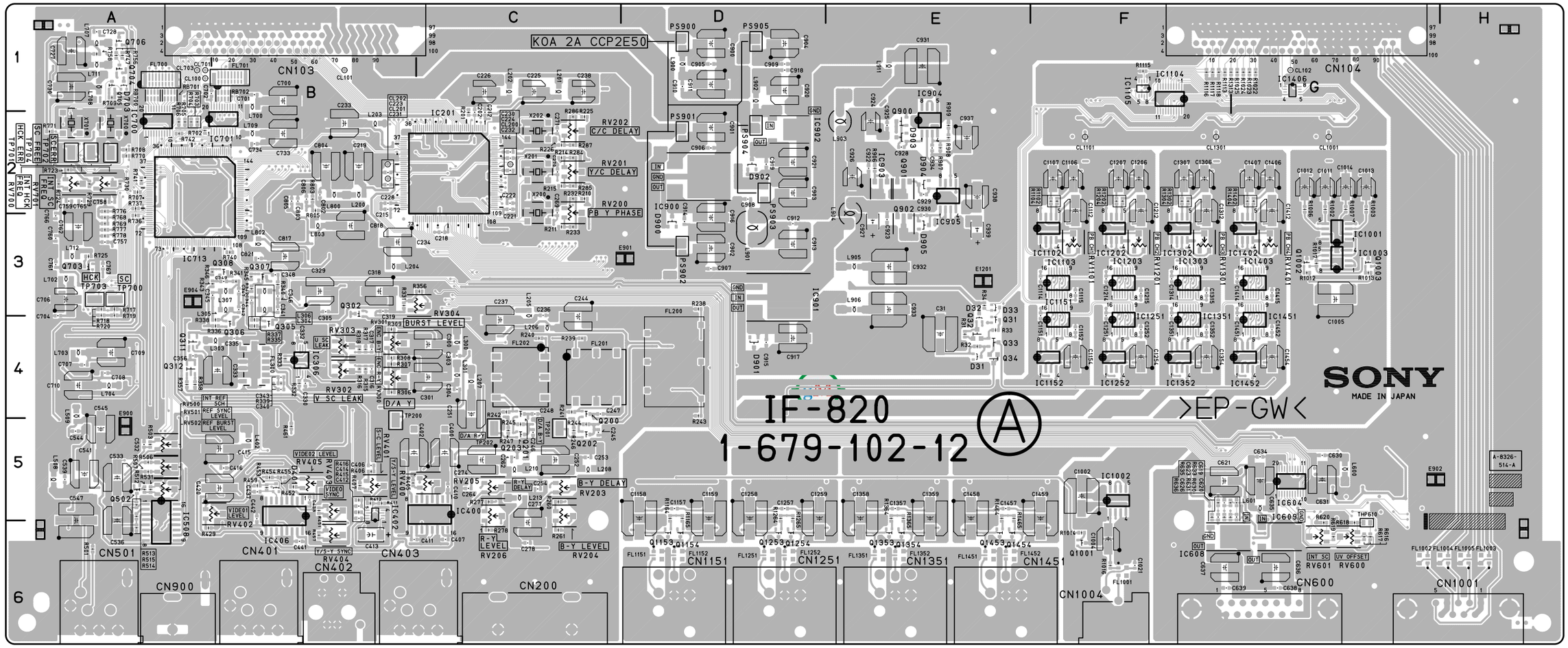

IF-820 -A SIDE-
SUFFIX: -12
FOR DSR-1600/P

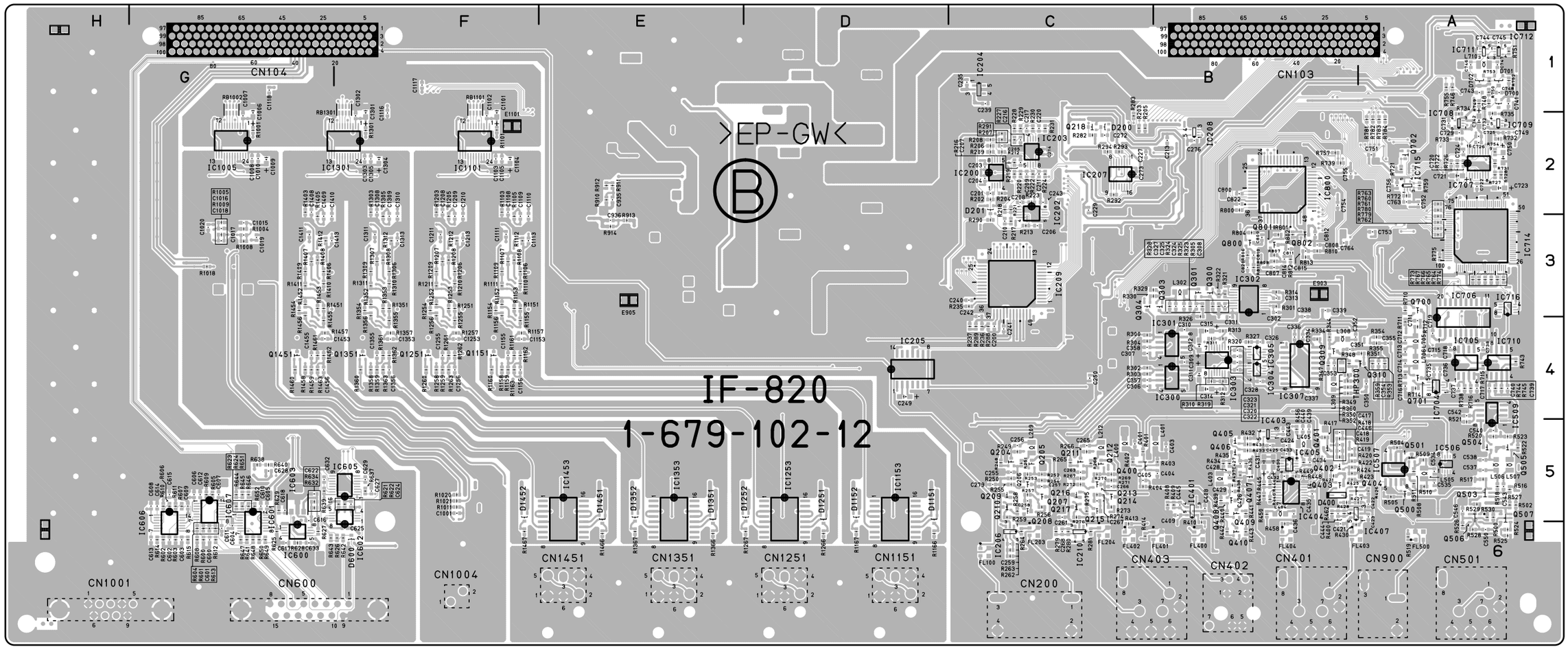

IF-820 -B SIDE-
SUFFIX: -12
FOR DSR-1600/P

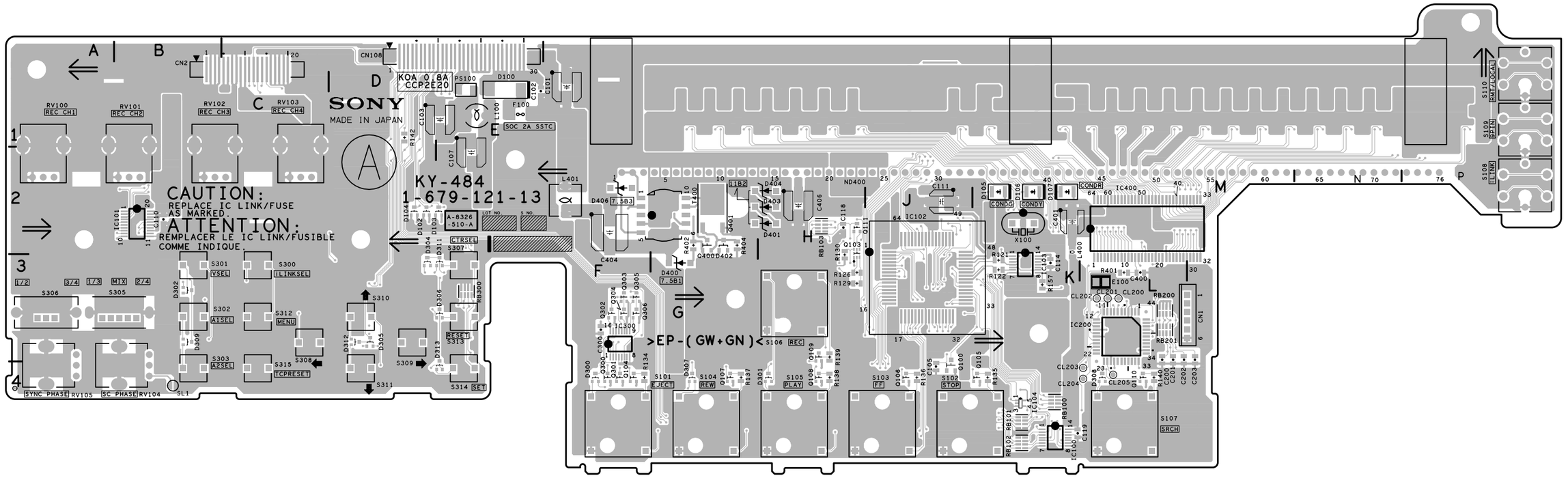

KY-484/484A -A SIDE-

SUFFIX: -13

KY-484: FOR DSR-1800/P
KY-484A: FOR DSR-1600/P

KY-484 (1-679-121-13)

C100	*E1	C405	*G2	C530	*K1	CL12	*E1	D102	D2	IC100	K4	Q113	*K2	Q518	*H1	Q550	*M1	Q582	*K1	R114	*A3	R150	*P1	R515	*N1	R547	*G1	S303	B4
C101	F1	C406	H2	C531	*L1	CL13	*E1	D103	E2	IC101	B2	Q114	*K2	Q519	*H1	Q551	*M1	Q583	*K1	R115	*J2	R151	*J3	R516	*M1	R548	*H1	S305	B3
C102	E1	C500	*J1	C532	*L1	CL14	*E1	D104	D2	IC102	J3	Q115	*P1	Q520	*J1	Q552	*M1	Q584	*L1	R117	*J3	R152	*J3	R517	*G1	R549	*H1	S306	A3
C103	E1	C501	*K1	C533	*P1	CL15	*E1	D105	K2	IC103	K3	Q116	*P1	Q521	*J1	Q553	*M1	Q585	*L1	R118	*J3	R153	*J3	R518	*G1			S307	E3
C104	*E1	C502	*L1	C534	*N1	CL16	*E1	D106	K2	IC104	K4	Q117	*P1	Q522	*K1	Q554	*G1	Q586	*N1	R119	*J2	R154	*J3	R519	*H1	RB100	K4	S308	C3
C105	J4	C503	*P1	C535	*M1	CL17	*L3	D107	K2	IC200	L3	Q300	F4	Q523	*K1	Q555	*G1	Q587	*N1	R120	*J3	R155	*K3	R520	*K1	RB101	K4	S309	D3
C106	*A4	C504	*P1	C536	*M1	CL18	*L3	D300	F4	IC300	F3	Q301	F4	Q524	*L1	Q556	*H1	Q588	*N1	R121	K3	R156	*K3	R521	*K1	RB102	K4	S310	D3
C107	E2	C505	*N1	C537	*G1	CL19	*L3	D301	H4	IC400	L3	Q302	F3	Q525	*L1	Q557	*H1	Q589	*N1	R122	K3	R157	K3	R522	*L1	RB103	H2	S311	D4
C108	*E1	C506	*M1	C538	*H1	CL20	*L3	D302	B3			Q303	F3	Q526	*P1	Q558	*H1	Q590	*M1	R124	*H3	R159	*K4	R523	*P1	RB200	L3	S312	C3
C109	*J3	C507	*L1	C539	*H1	CL21	*L3	D303	*P2	L100	E1	Q304	F3	Q527	*P1	Q559	*H1	Q591	*M1	R125	*J3	R201	*L3	R524	*N1	RB201	L3	S313	E3
C110	B2	C508	*G1	C540	*K1	CL22	*B1	D304	D3	L103	*D2	Q305	F3	Q528	*N1	Q560	*K1	Q592	*M1	R126	H3	R401	L3	R525	*M1	RB300	E3	S314	E4
C111	J2	C509	*H1	C541	*L1	CL23	*C1	D305	D3	L104	*K3	Q306	F3	Q529	*N1	Q561	*K1	Q593	*M1	R127	*H3	R402	G2	R526	*M1			S315	C4
C112	*J2	C510	*J1	C542	*L1	CL24	*C1	D306	E3	L400	K2	Q400	G2	Q530	*N1	Q562	*K1	Q594	*G1	R128	*J3	R403	*G2	R527	*G1	RV100	A2		
C113	*J2	C511	*K1	C543	*P1	CL25	*C1	D307	G4	L401	F2	Q401	G2	Q531	*N1	Q563	*K1	Q595	*G1	R129	H3	R404	G2	R528	*H1	RV101	B2	SL1	B4
C114	K3	C512	*L1	C544	*N1	CL26	*C1	D308	L4			Q500	*J1	Q532	*M1	Q564	*L1	Q596	*H1	R130	H3	R405	*G2	R529	*H1	RV102	B2		
C118	H2	C513	*P1	C545	*M1	CL27	*C1	D309	B3	ND400	K2	Q501	*J1	Q533	*M1	Q565	*L1	Q597	*H1	R131	*K2	R406	*J2	R530	*K1	RV103	C2	T400	G2
C119	K4	C514	*N1	C546	*M1	CL28	*C1	D310	*P1			Q502	*K1	Q534	*G1	Q566	*P1	Q598	*H1	R132	*K2	R407	*F2	R531	*L1	RV104	B4		
C120	*K4	C515	*N1	C547	*G1	CL29	*C1	D311	E3	PS100	E1	Q503	*K1	Q535	*G1	Q567	*P1	Q599	*H1	R133	*J2	R500	*J1	R532	*L1	RV105	A4	X100	K2
C200	L3	C516	*M1	C548	*H1	CL100	*J3	D312	D3			Q504	*L1	Q536	*G1	Q568	*N1			R134	F4	R501	*K1	R533	*P1				
C201	L3	C517	*G1	C549	*H1	CL200	L3	D313	E4	Q100	J4	Q505	*L1	Q537	*G1	Q569	*N1	R101	*A2	R135	K4	R502	*L1	R534	*N1	S101	F4	*:B SIDE	
C202	L3	C518	*G1			CL201	L3	D400	G3	Q101	*J3	Q506	*P1	Q538	*H1	Q570	*M1	R102	*B2	R136	J4	R503	*P1	R535	*M1	S102	J4		
C203	M3	C519	*H1	CL1	*D1	CL202	L3	D401	H2	Q102	*J3	Q507	*P1	Q539	*H1	Q571	*M1	R103	*B2	R137	G4	R504	*P1	R536	*M1	S103	J4		
C204	*L3	C520	*K1	CL2	*D1	CL203	L4	D402	G2	Q103	H2	Q508	*N1	Q540	*K1	Q572	*M1	R104	*C2	R138	H4	R505	*N1	R537	*G1	S104	G4		
C205	*L3	C521	*K1	CL3	*D2	CL204	L4	D403	H2	Q104	F4	Q509	*N1	Q541	*K1	Q573	*M1	R105	*K3	R139	H3	R506	*M1	R538	*H1	S105	H4		
C206	*L3	C522	*L1	CL4	*D1	CL205	L4	D404	H2	Q105	K4	Q510	*N1	Q542	*K1	Q574	*G1	R106	*J3	R140	L4	R507	*L1	R539	*H1	S106	H3		
C207	*L3	C523	*P1	CL5	*D1			D405	*G2	Q106	J4	Q511	*N1	Q543	*K1	Q575	*G1	R107	*J3	R141	*K4	R508	*G1	R540	*K1	S107	L4		
C300	F3	C524	*N1	CL6	*D2	CN1	L3	D406	F2	Q107	G4	Q512	*M1	Q544	*L1	Q576	*H1	R108	*J3	R142	D1	R509	*H1	R541	*L1	S108	P2		
C400	L3	C525	*M1	CL7	*D1	CN2	C1			Q108	H4	Q513	*M1	Q545	*L1	Q577	*H1	R109	*B2	R145	*K2	R510	*J1	R542	*L1	S109	P1		
C401	K2	C526	*M1	CL8	*D1	CN108	E1	E100	L3	Q109	H3	Q514	*L1	Q546	*P1	Q578	*H1	R110	*B2	R146	*K2	R511	*K1	R543	*P1	S110	P1		
C402	*L2	C527	*G1	CL9	*D2					Q110	L4	Q515	*L1	Q547	*P1	Q579	*H1	R111	*J2	R147	*K2	R512	*L1	R544	*N1	S300	C3		
C403	*L2	C528	*H1	CL10	*E1	D100	E1	F100	E1	Q111	H2	Q516	*G1	Q548	*N1	Q580	*K1	R112	*B2	R148	*P2	R513	*P1	R545	*M1	S301	B3		
C404	F2	C529	*H1	CL11	*E1	D101	*J3			Q112	*K2	Q517	*G1	Q549	*N1	Q581	*K1	R113	*K3	R149	*P1	R514	*N1	R546	*M1	S302	B3		

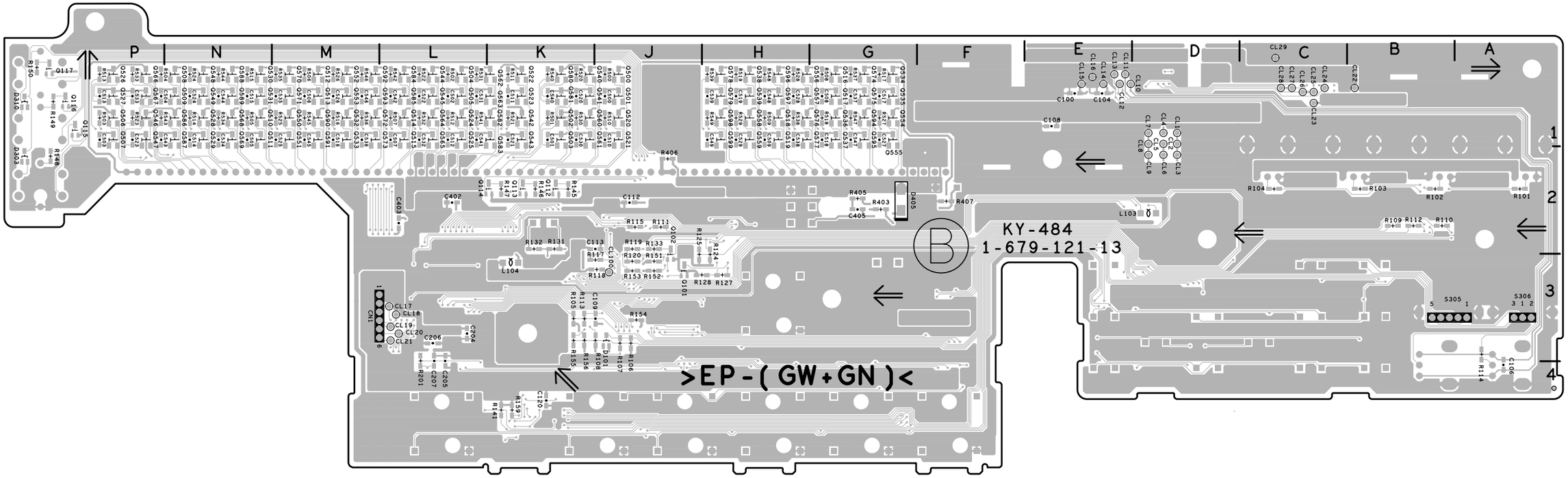

KY-484/484A -B SIDE-

SUFFIX: -13

KY-484: FOR DSR-1800/P
KY-484A: FOR DSR-1600/P

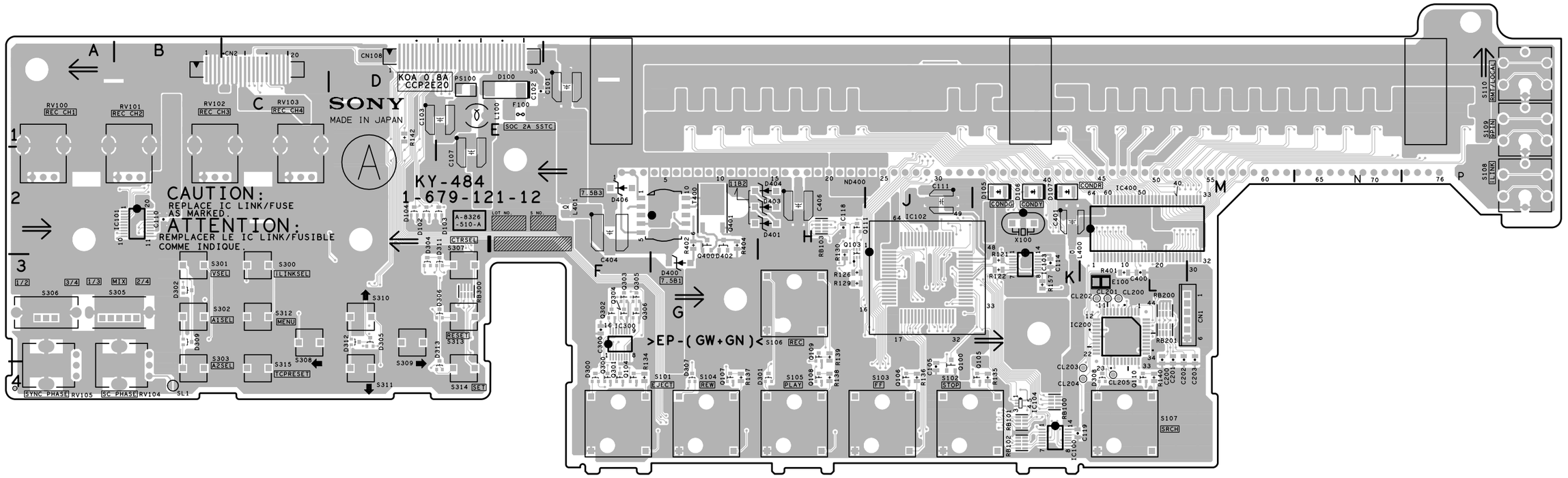

KY-484/484A -A SIDE-

SUFFIX: -12

KY-484: FOR DSR-1800/P
KY-484A: FOR DSR-1600/P

KY-484/484A (1-679-121-12)

C100	*E1	C405	*G2	C530	*K1	CL12	*E1	D102	D2	IC100	K4	Q113	*K2	Q518	*H1	Q550	*M1	Q582	*K1	R114	*A3	R150	*P1	R515	*N1	R547	*G1	S303	B4
C101	F1	C406	H2	C531	*L1	CL13	*E1	D103	E2	IC101	B2	Q114	*K2	Q519	*H1	Q551	*M1	Q583	*K1	R115	*J2	R151	*J3	R516	*M1	R548	*H1	S305	B3
C102	E1	C500	*J1	C532	*L1	CL14	*E1	D104	D2	IC102	J3	Q115	*P1	Q520	*J1	Q552	*M1	Q584	*L1	R117	*J3	R152	*J3	R517	*G1	R549	*H1	S306	A3
C103	E1	C501	*K1	C533	*P1	CL15	*E1	D105	K2	IC103	K3	Q116	*P1	Q521	*J1	Q553	*M1	Q585	*L1	R118	*J3	R153	*J3	R518	*G1			S307	E3
C104	*E1	C502	*L1	C534	*N1	CL16	*E1	D106	K2	IC104	K4	Q117	*P1	Q522	*K1	Q554	*G1	Q586	*N1	R119	*J2	R154	*J3	R519	*H1	RB100	K4	S308	C3
C105	J4	C503	*P1	C535	*M1	CL17	*L3	D107	K2	IC200	L3	Q300	F4	Q523	*K1	Q555	*G1	Q587	*N1	R120	*J3	R155	*K3	R520	*K1	RB101	K4	S309	D3
C106	*A4	C504	*P1	C536	*M1	CL18	*L3	D300	F4	IC300	F3	Q301	F4	Q524	*L1	Q556	*H1	Q588	*N1	R121	K3	R156	*K3	R521	*K1	RB102	K4	S310	D3
C107	E2	C505	*N1	C537	*G1	CL19	*L3	D301	H4	IC400	L3	Q302	F3	Q525	*L1	Q557	*H1	Q589	*N1	R122	K3	R157	K3	R522	*L1	RB103	H2	S311	D4
C108	*E1	C506	*M1	C538	*H1	CL20	*L3	D302	B3			Q303	F3	Q526	*P1	Q558	*H1	Q590	*M1	R124	*H3	R159	*K4	R523	*P1	RB200	L3	S312	C3
C109	*J3	C507	*L1	C539	*H1	CL21	*L3	D303	*P2	L100	E1	Q304	F3	Q527	*P1	Q559	*H1	Q591	*M1	R125	*J3	R201	*L3	R524	*N1	RB201	L3	S313	E3
C110	B2	C508	*G1	C540	*K1	CL22	*B1	D304	D3	L103	*D2	Q305	F3	Q528	*N1	Q560	*K1	Q592	*M1	R126	H3	R401	L3	R525	*M1	RB300	E3	S314	E4
C111	J2	C509	*H1	C541	*L1	CL23	*C1	D305	D3	L104	*K3	Q306	F3	Q529	*N1	Q561	*K1	Q593	*M1	R127	*H3	R402	G2	R526	*M1			S315	C4
C112	*J2	C510	*J1	C542	*L1	CL24	*C1	D306	E3	L400	K2	Q400	G2	Q530	*N1	Q562	*K1	Q594	*G1	R128	*J3	R403	*G2	R527	*G1	RV100	A2		
C113	*J2	C511	*K1	C543	*P1	CL25	*C1	D307	G4	L401	F2	Q401	G2	Q531	*N1	Q563	*K1	Q595	*G1	R129	H3	R404	G2	R528	*H1	RV101	B2	SL1	B4
C114	K3	C512	*L1	C544	*N1	CL26	*C1	D308	L4			Q500	*J1	Q532	*M1	Q564	*L1	Q596	*H1	R130	H3	R405	*G2	R529	*H1	RV102	B2		
C118	H2	C513	*P1	C545	*M1	CL27	*C1	D309	B3	ND400	K2	Q501	*J1	Q533	*M1	Q565	*L1	Q597	*H1	R131	*K2	R406	*J2	R530	*K1	RV103	C2	T400	G2
C119	K4	C514	*N1	C546	*M1	CL28	*C1	D310	*P1			Q502	*K1	Q534	*G1	Q566	*P1	Q598	*H1	R132	*K2	R407	*F2	R531	*L1	RV104	B4		
C120	*K4	C515	*N1	C547	*G1	CL29	*C1	D311	E3	PS100	E1	Q503	*K1	Q535	*G1	Q567	*P1	Q599	*H1	R133	*J2	R500	*J1	R532	*L1	RV105	A4	X100	K2
C200	L3	C516	*M1	C548	*H1	CL100	*J3	D312	D3			Q504	*L1	Q536	*G1	Q568	*N1			R134	F4	R501	*K1	R533	*P1				
C201	L3	C517	*G1	C549	*H1	CL200	L3	D313	E4	Q100	J4	Q505	*L1	Q537	*G1	Q569	*N1	R101	*A2	R135	K4	R502	*L1	R534	*N1	S101	F4	*:B SIDE	
C202	L3	C518	*G1			CL201	L3	D400	G3	Q101	*J3	Q506	*P1	Q538	*H1	Q570	*M1	R102	*B2	R136	J4	R503	*P1	R535	*M1	S102	J4		
C203	M3	C519	*H1	CL1	*D1	CL202	L3	D401	H2	Q102	*J3	Q507	*P1	Q539	*H1	Q571	*M1	R103	*B2	R137	G4	R504	*P1	R536	*M1	S103	J4		
C204	*L3	C520	*K1	CL2	*D1	CL203	L4	D402	G2	Q103	H2	Q508	*N1	Q540	*K1	Q572	*M1	R104	*C2	R138	H4	R505	*N1	R537	*G1	S104	G4		
C205	*L3	C521	*K1	CL3	*D2	CL204	L4	D403	H2	Q104	F4	Q509	*N1	Q541	*K1	Q573	*M1	R105	*K3	R139	H3	R506	*M1	R538	*H1	S105	H4		
C206	*L3	C522	*L1	CL4	*D1	CL205	L4	D404	H2	Q105	K4	Q510	*N1	Q542	*K1	Q574	*G1	R106	*J3	R140	L4	R507	*L1	R539	*H1	S106	H3		
C207	*L3	C523	*P1	CL5	*D1			D405	*G2	Q106	J4	Q511	*N1	Q543	*K1	Q575	*G1	R107	*J3	R141	*K4	R508	*G1	R540	*K1	S107	L4		
C300	F3	C524	*N1	CL6	*D2	CN1	L3	D406	F2	Q107	G4	Q512	*M1	Q544	*L1	Q576	*H1	R108	*J3	R142	D1	R509	*H1	R541	*L1	S108	P2		
C400	L3	C525	*M1	CL7	*D1	CN2	C1			Q108	H4	Q513	*M1	Q545	*L1	Q577	*H1	R109	*B2	R145	*K2	R510	*J1	R542	*L1	S109	P1		
C401	K2	C526	*M1	CL8	*D1	CN108	E1	E100	L3	Q109	H3	Q514	*L1	Q546	*P1	Q578	*H1	R110	*B2	R146	*K2	R511	*K1	R543	*P1	S110	P1		
C402	*L2	C527	*G1	CL9	*D2					Q110	L4	Q515	*L1	Q547	*P1	Q579	*H1	R111	*J2	R147	*K2	R512	*L1	R544	*N1	S300	C3		
C403	*L2	C528	*H1	CL10	*E1	D100	E1	F100	E1	Q111	H2	Q516	*G1	Q548	*N1	Q580	*K1	R112	*B2	R148	*P2	R513	*P1	R545	*M1	S301	B3		
C404	F2	C529	*H1	CL11	*E1	D101	*J3			Q112	*K2	Q517	*G1	Q549	*N1	Q581	*K1	R113	*K3	R149	*P1	R514	*N1	R546	*M1	S302	B3		

http://getMANUAL.com

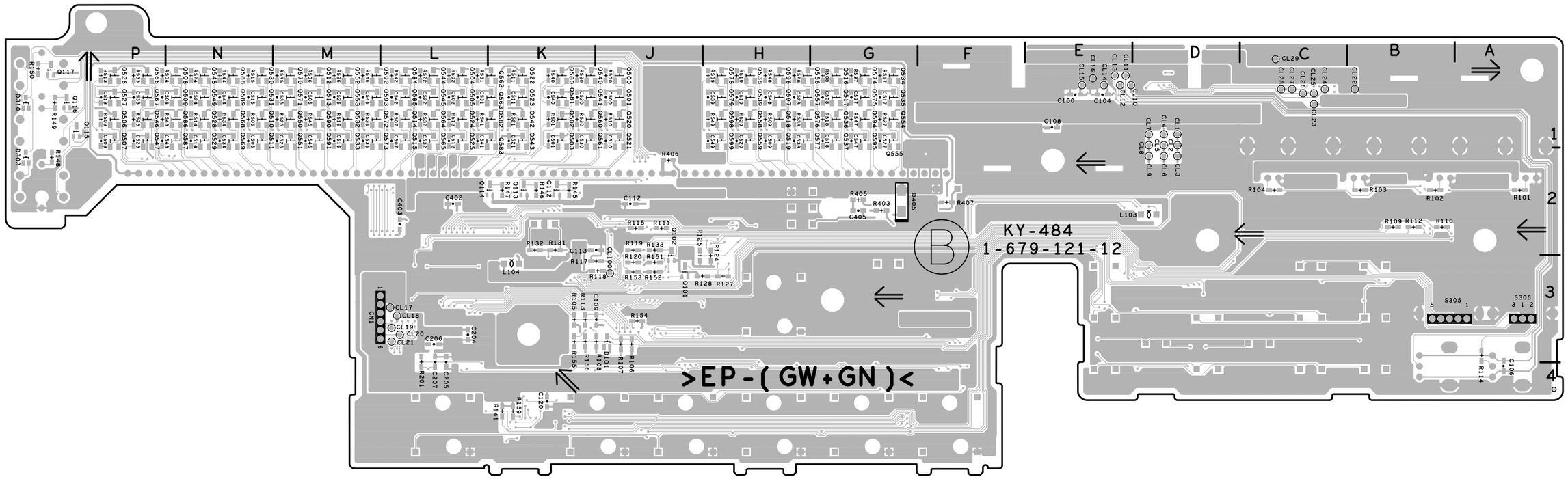

KY-484/484A -B SIDE-

SUFFIX: -12

KY-484: FOR DSR-1800/P
KY-484A: FOR DSR-1600/P

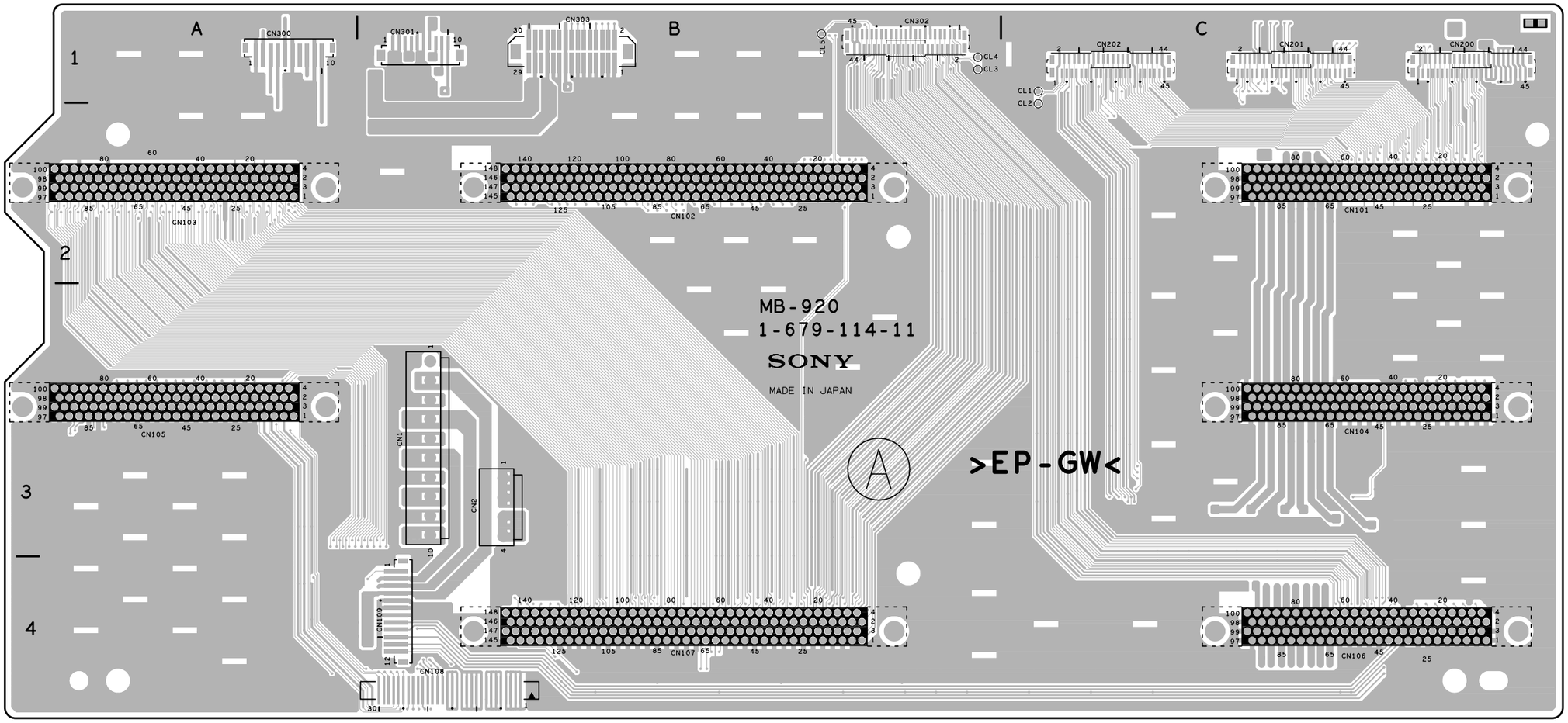

MB-920 -A SIDE-
SUFFIX: -11
FOR DSR-1800/P

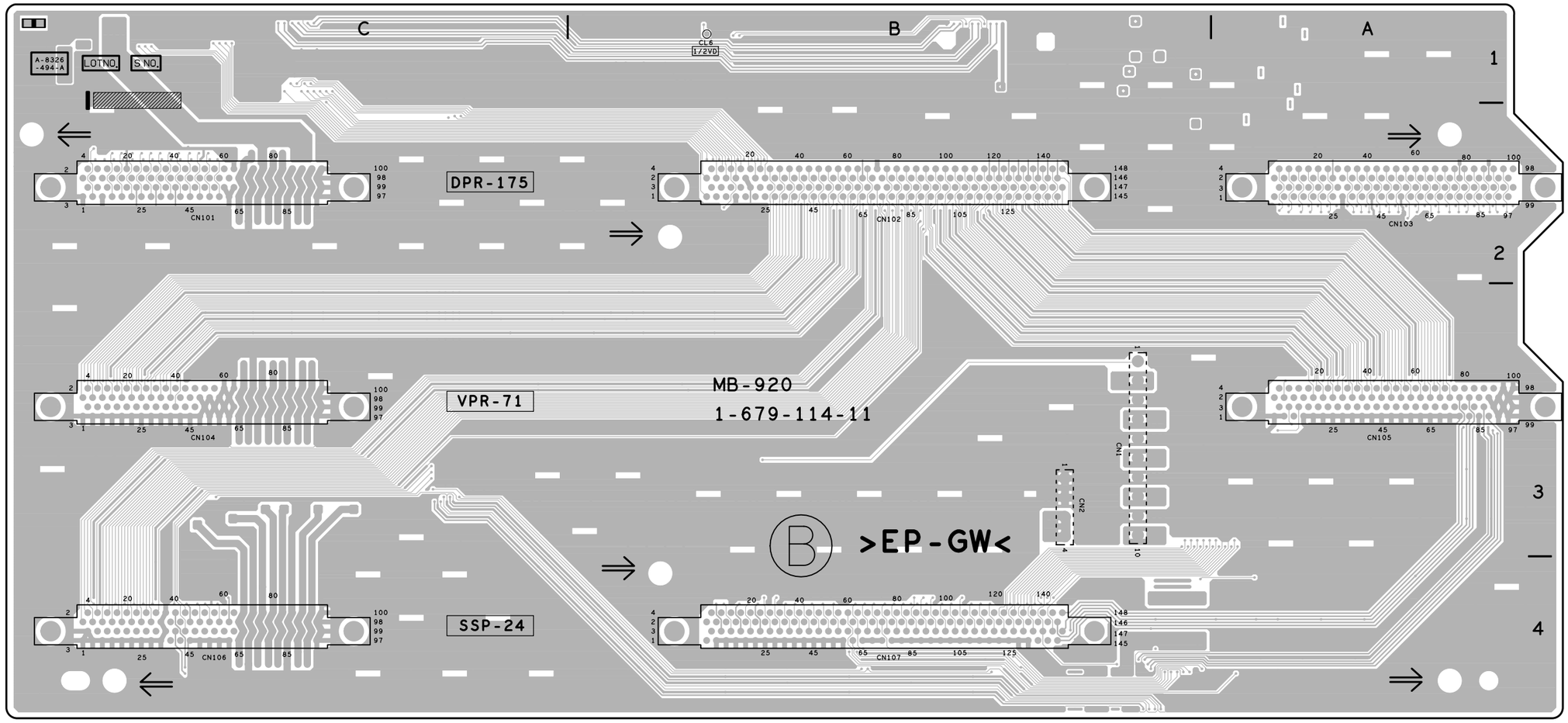

MB-920 (1-679-114-11)

CL1	C1
CL2	C2
CL3	B1
CL4	B1
CL5	B1
CL6	*B1
CN1	B3
CN2	B3
CN101	*C2
CN102	*B2
CN103	*A2
CN104	*C3
CN105	*A3
CN106	*C4
CN107	*B4
CN108	B4
CN109	B4
CN200	C1
CN201	C1
CN202	C1
CN300	A1
CN301	B1
CN302	B1
CN303	B1

*:B SIDE

MB-920 -B SIDE-
SUFFIX: -11
FOR DSR-1800/P

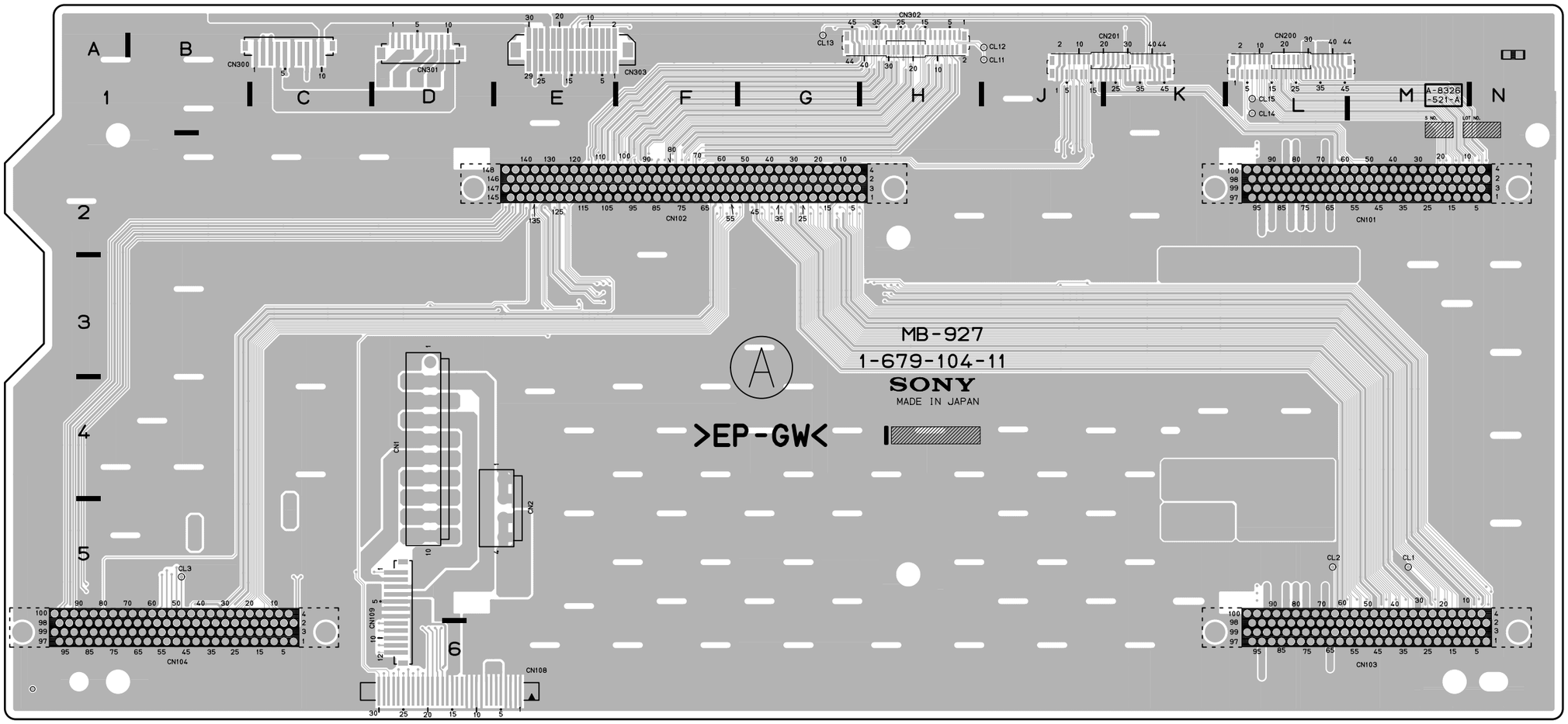

MB-927 -A SIDE-
SUFFIX: -11
FOR DSR-1600/P

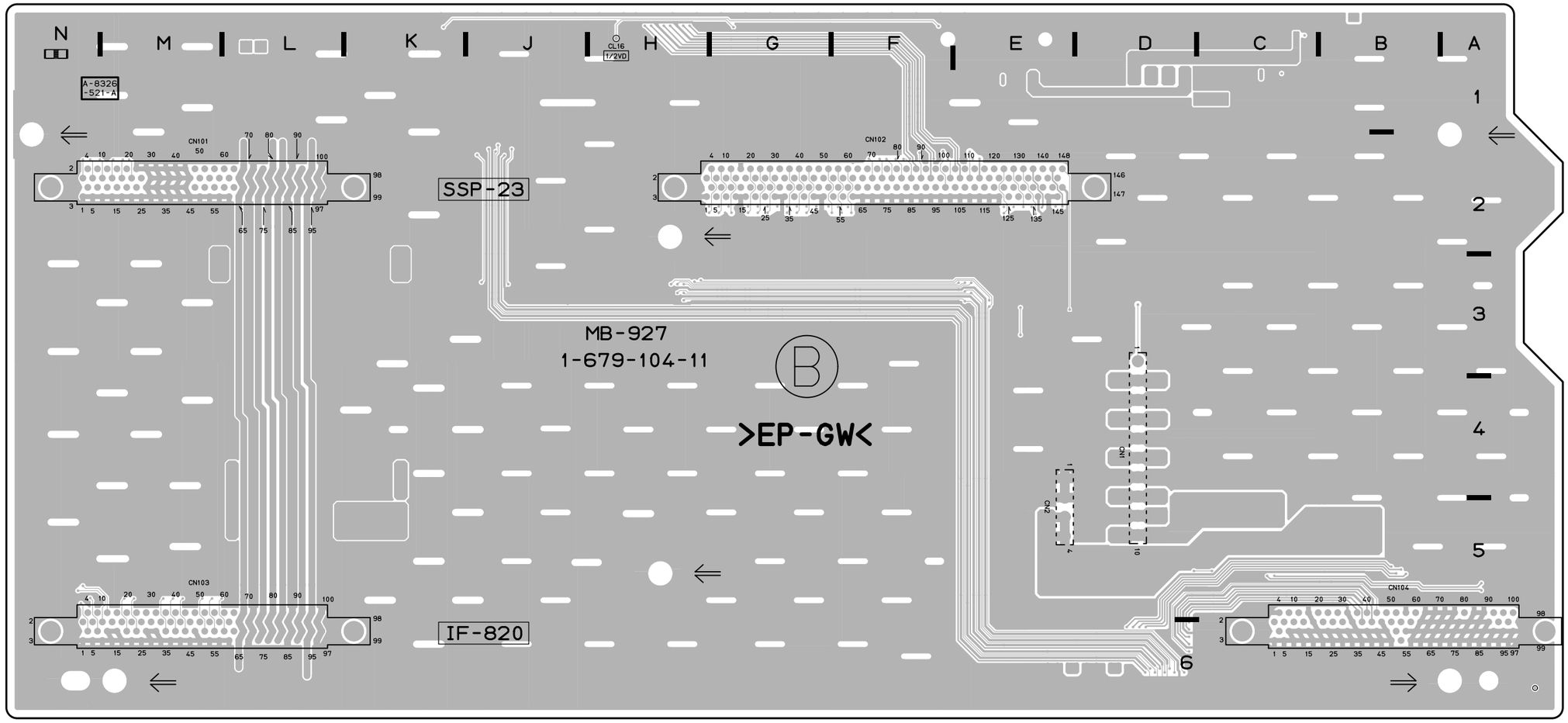

MB-927 (1-679-104-11)

CL1	M5
CL2	L5
CL3	B5
CL11	J1
CL12	J1
CL13	G1
CL14	L1
CL15	L1
CL16	*H1
CN1	D4
CN2	E5
CN101	*M2
CN102	*F2
CN103	*M6
CN104	*B6
CN108	D6
CN109	D5
CN200	L1
CN201	K1
CN300	C1
CN301	D1
CN302	H1
CN303	E1

*:B SIDE

MB-927 -B SIDE-
SUFFIX: -11
FOR DSR-1600/P

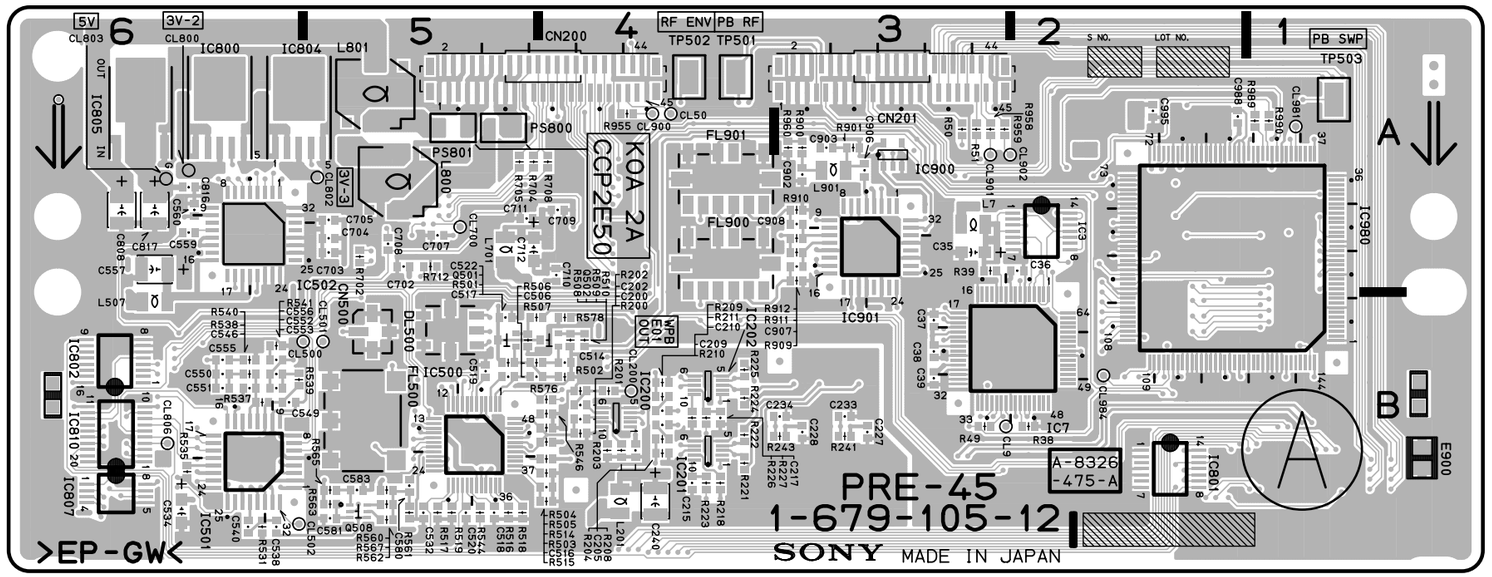

PRE-45 -A SIDE-

SUFFIX: -12

FOR DSR-1600/P

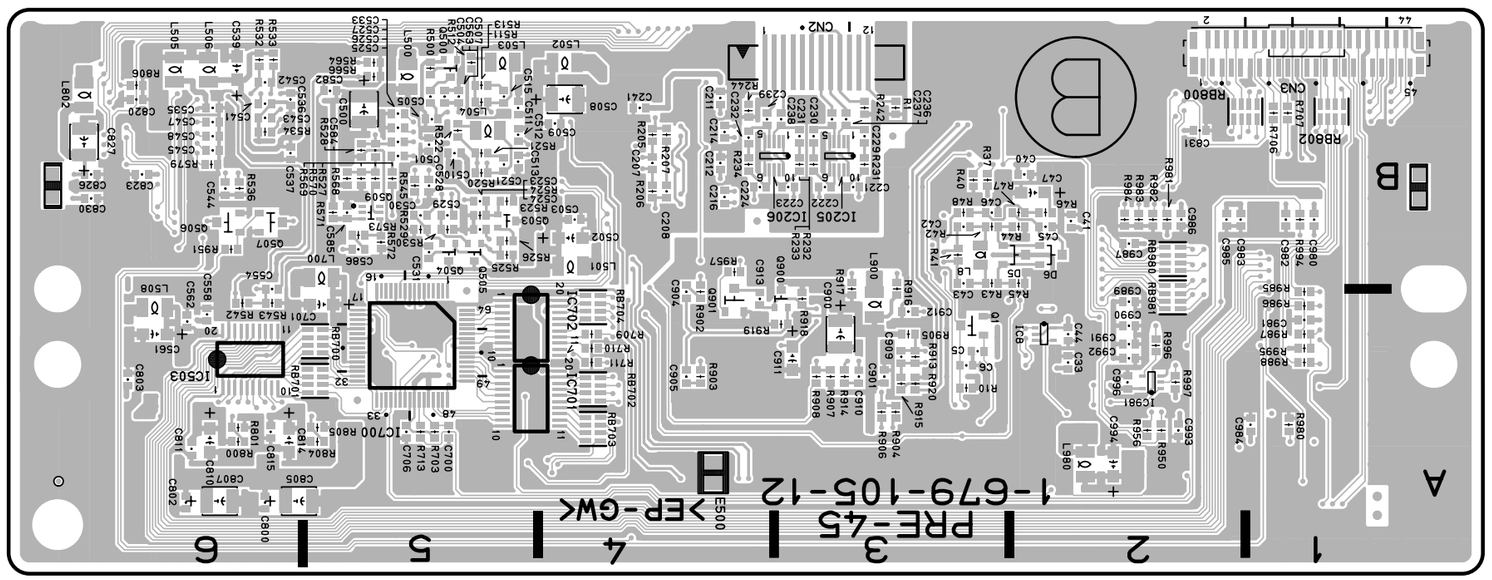

PRE-45 -B SIDE-

SUFFIX: -12

FOR DSR-1600/P

PRE-45 (1-679-105-12)

C5	*A3	C545	*B6	CL500	B5	Q509	*B5	R543	*A6	TP501	A4
C6	*A3	C546	B6	CL501	B5	Q900	*A3	R544	B5	TP502	A4
C33	*A2	C547	*B6	CL502	B6	Q901	*A4	R545	*B5	TP503	A1
C35	A3	C548	*B6	CL700	A5			R546	B4		
C36	A2	C549	B6	CL800	A6	R1	*B3	R560	B5	*:B SIDE	
C37	B3	C550	B6	CL802	A5	R10	*A3	R561	B5		
C38	B3	C551	B6	CL803	A6	R37	*B3	R562	B5		
C39	B3	C552	B6	CL806	B6	R38	B2	R563	B5		
C40	*B2	C553	B6	CL900	A4	R39	A3	R564	*B5		
C41	*B2	C554	*A6	CL901	A3	R40	*B3	R565	B5		
C42	*B3	C555	B6	CL902	A2	R41	*B3	R566	*B5		
C43	*B3	C556	B6	CL981	A1	R42	*B3	R567	B5		
C44	*A2	C557	A6	CL984	B2	R43	*B3	R568	*B5		
C45	*B2	C558	*A6	CN2	*B3	R44	*B2	R569	*B5		
C46	*B3	C559	A6	CN3	*B1	R45	*B2	R570	*B5		
C47	*B2	C560	A6	CN200	A4	R46	*B2	R571	*B5		
C200	B4	C561	*A6	CN201	A3	R47	*B2	R572	*B5		
C202	B4	C562	*A6	CN500	B5	R48	*B3	R573	*B5		
C205	B4	C563	*B5			R49	B3	R576	B4		
C207	*B4	C580	B5	D5	*B2	R50	A3	R578	B4		
C208	*B4	C581	B5	D6	*B2	R51	A3	R579	*B6		
C209	B4	C582	*B5			R200	B4	R702	A5		
C210	B4	C583	B5	DL500	B5	R201	B4	R703	*A5		
C211	*B4	C584	*B5			R202	B4	R704	A5		
C212	*B4	C585	*B5	E500	*A4	R203	B4	R705	A5		
C214	*B4	C586	*B5	E900	B1	R204	B4	R706	*B1		
C215	B4	C700	*A5			R205	*B4	R707	*B1		
C216	*B4	C701	*A5	FL500	B5	R206	*B4	R708	A4		
C217	B4	C702	A5	FL900	A4	R207	*B4	R709	*A4		
C221	*B3	C703	A5	FL901	A4	R208	B4	R710	*A4		
C222	*B3	C704	A5			R209	B4	R711	*A4		
C223	*B3	C705	A5	IC3	A2	R210	B4	R712	A5		
C224	*B4	C706	*A5	IC7	B2	R211	B4	R713	*A5		
C227	B3	C707	A5	IC8	*A2	R218	B4	R800	*A6		
C228	B3	C708	A5	IC200	B4	R221	B4	R801	*A6		
C229	*B3	C709	A4	IC201	B4	R222	B4	R804	*A5		
C230	*B3	C710	A4	IC202	B4	R223	B4	R805	*A5		
C231	*B3	C711	A5	IC205	*B3	R224	B4	R806	*B6		
C232	*B4	C712	A5	IC206	*B3	R225	B4	R900	A3		
C233	B3	C800	*A6	IC500	B5	R226	B4	R901	A3		
C234	B3	C802	*A6	IC501	B6	R227	B4	R902	*A4		
C236	*B3	C803	*A6	IC502	A6	R231	*B3	R903	*A4		
C237	*B3	C805	*A6	IC503	*A6	R232	*B3	R904	*A3		
C238	*B3	C807	*A6	IC700	*A5	R233	*B3	R905	*A3		
C239	*B4	C808	A6	IC701	*A5	R234	*B4	R906	*A3		
C240	B4	C810	*A6	IC702	*A5	R241	B3	R907	*A3		
C241	*B4	C811	*A6	IC800	A6	R242	*B3	R908	*A3		
C500	*B5	C814	*A6	IC801	B2	R243	B3	R909	A3		
C501	*B5	C815	*A6	IC802	B6	R244	*B4	R910	A3		
C502	*B4	C816	A6	IC804	A6	R500	*B5	R911	A3		
C503	*B4	C817	A6	IC805	A6	R501	B5	R912	A3		
C504	*B5	C820	*B6	IC807	B6	R502	B4	R913	*A3		
C505	*B5	C823	*B6	IC810	B6	R503	B4	R914	*A3		
C506	B5	C826	*B6	IC900	A3	R504	B4	R915	*A3		
C507	*B5	C827	*B6	IC901	A3	R505	B4	R916	*A3		
C508	*B4	C830	*B6	IC980	A2	R506	B5	R917	*A3		
C509	*B4	C831	*B2	IC981	*A2	R507	B5	R918	*A3		
C510	*B5	C900	*A3			R508	B5	R919	*A3		
C511	*B5	C901	*A3	L7	A3	R509	B4	R920	*A3		
C512	*B5	C902	A3	L8	*B3	R510	B4	R950	*A2		
C513	*B5	C903	A3	L201	B4	R511	*B5	R951	*B6		
C514	B4	C904	*A4	L500	*B5	R512	*B5	R955	A4		
C515	*B5	C905	*A4	L501	*B4	R513	*B5	R956	*A2		
C516	B4	C906	A3	L502	*B4	R514	B4	R957	*B4		
C517	B5	C907	A3	L503	*B5	R515	B4	R958	A3		
C518	B5	C908	A3	L504	*B5	R516	B5	R959	A3		
C519	B5	C909	*A3	L505	*B6	R517	B5	R960	A3		
C520	B5	C910	*A3	L506	*B6	R518	B5	R980	*A1		
C521	*B5	C911	*A3	L507	B6	R519	B5	R981	*B2		
C522	B5	C912	*A3	L508	*A6	R520	*B5	R982	*B2		
C523	*B5	C913	*A4	L700	*B5	R521	*B5	R983	*B2		
C524	*B5	C980	*B1	L701	A5	R522	*B5	R984	*B2		
C525	*B5	C981	*A1	L800	A5	R523	*B5	R985	*A1		
C526	*B5	C982	*B1	L801	A5	R524	*B5	R986	*A1		
C527	*B5	C983	*B2	L802	*B6	R525	*B5	R987	*A1		
C528	*B5	C984	*A1	L900	*A3	R526	*B5	R988	*A1		
C529	*B5	C985	*B2	L901	A3	R527	*B5	R989	A1		
C530	*B5	C986	*B2	L980	*A2	R528	*B5	R990	A1		
C531	*B5	C987	*B2			R529	*B5	R994	*B1		
C532	B5	C988	A2	PS800	A5	R530	*B5	R995	*A1		
C533	*B5	C989	*A2	PS801	A5	R531	B6	R996	*A2		
C534	B6	C990	*A2			R532	*B6	R997	*A2		
C535	*B6	C991	*A2	Q1	*A3	R533	*B6				
C536	*B6	C992	*A2	Q500	*B5	R534	*B6	RB700	*A5		
C537	*B6	C993	*A2	Q501	B5	R535	B6	RB701	*A5		
C538	B6	C994	*A2	Q502	B4	R536	*B6	RB702	*A4		
C539	*B6	C995	A2	Q503	*B5	R537	B6	RB703	*A4		
C540	B6	C996	*A2	Q504	*B5	R538	B6	RB704	*A4		
C541	*B6			Q505	*B5	R539	B6	RB800	*B1		
C542	*B6	CL9	B3	Q506	*B6	R540	B6	RB802	*B1		
C543	*B6	CL50	A4	Q507	*B6	R541	B6	RB980	*B2		
C544	*B6	CL200	B4	Q508	B5	R542	*A6	RB981	*A2		

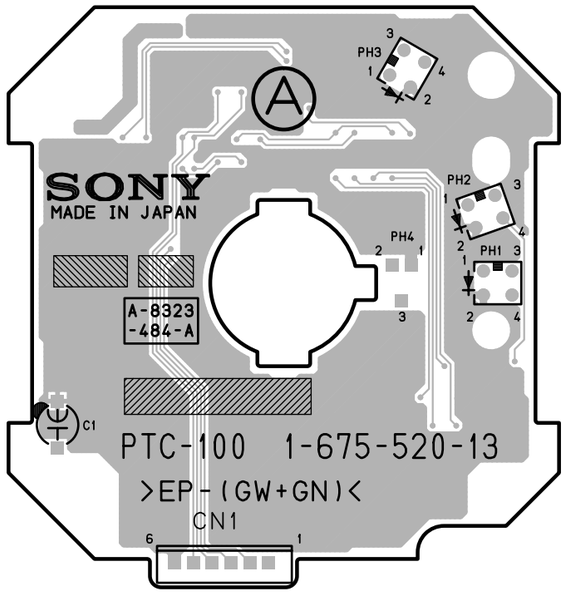

PTC-100 -A SIDE-
SUFFIX: -13

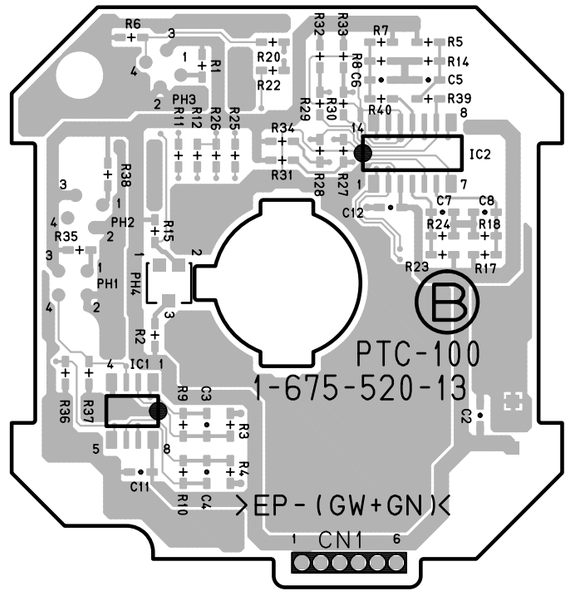

PTC-100 -B SIDE-
SUFFIX: -13

RP-120 (1-679-115-13)

C1	*B1	C153	*B3	C317	D2	C436	*E3	C557	G4	C825	*G3	CL803	H2	IC601	*E1	L701	*F1	R44	*A2	R187	D3	R339	E2	R508	E4	R707	*G4	RB801	H4
C2	*B1	C154	C3	C318	D2	C437	*E3	C558	G4	C826	*G4	CL804	H3	IC602	*D1	L800	G1	R45	*A2	R188	*D4	R340	E2	R509	E4	R708	*G4	RB802	H4
C3	*B2	C155	*B4	C319	D2	C438	F3	C559	G4	C827	*H4	CL805	G4	IC603	D1	L801	G1	R46	*A2	R189	*C3	R341	E2	R510	E4	R709	F1	RB900	*C1
C4	*A2	C156	*B4	C320	D2	C439	*E3	C560	G4	C828	*G3	CL806	G4	IC604	D1	L802	*H4	R47	*A2	R190	*C4	R342	*F2	R511	*E4	R710	F1	RB980	*G1
C5	*A2	C157	B3	C321	*D2	C440	F3	C561	G4	C829	*H3	CL900	A1	IC605	*G2	L900	C2	R48	*A2	R191	*C4	R343	*F2	R512	*E4	R712	*G4	RB981	*G1
C6	*B3	C158	C3	C322	*D2	C441	*E3	C562	*H4	C830	*G3	CL901	*A1	IC606	*H1	L901	C2	R49	A3	R192	*C4	R360	E2	R513	*E4	R800	*A1	RB982	*G2
C7	A2	C165	D3	C323	*D2	C442	*F3	C563	*E4	C831	*C1	CL981	H1	IC607	*H1	L930	C2	R50	*A1	R193	*D4	R361	E2	R514	E4	R801	*A1	RB983	*G2
C8	A2	C166	*D3	C324	*D2	C443	*F3	C580	E4	C900	*C2	CL984	G2	IC650	F3	L931	C2	R51	A1	R194	C4	R362	E2	R515	E4	R802	*B2	RB984	*G2
C9	A2	C167	C3	C325	*E2	C444	*F3	C581	F4	C901	*C1			IC651	*E1	L980	*G1	R52	*A3	R195	D3	R363	*E2	R516	E4	R803	*B2	RB985	*G1
C10	*A3	C168	D3	C326	*D2	C445	*F3	C582	*F4	C902	C1	CN1	C4	IC652	*E1			R53	*A3	R200	*D4	R364	E2	R517	E4	R804	*G1		
C11	*A3	C169	*D3	C327	*E2	C446	F3	C583	F4	C903	C2	CN2	D4	IC653	E1	PS800	G1	R54	*A3	R201	D4	R365	*E2	R518	E4	R805	*G1	TP300	*B1
C12	*A2	C170	D3	C328	*D2	C447	*F3	C584	*F4	C904	*C1	CN3	A4	IC667	*D1	PS801	G1	R55	*A4	R202	D4	R366	E2	R519	E4	R806	H4	TP301	E1
C13	*B2	C171	D3	C329	*D2	C448	*F3	C585	*F4	C905	*C1	CN200	*F1	IC668	*D1			R56	*A4	R203	D4	R367	E1	R520	*E4	R900	C2	TP400	*C1
C14	*A3	C172	C3	C330	*D2	C449	E3	C586	F4	C906	C2	CN201	*E1	IC700	G4	Q1	B2	R100	B3	R204	*D4	R368	*E2	R521	*E4	R901	C2	TP401	D1
C15	*A3	C173	*D3	C331	*D2	C450	F3	C600	*F2	C907	C1	CN202	*C1	IC701	F1	Q100	*C4	R101	*B1	R205	*D4	R369	*E2	R522	*E4	R902	*C1	TP501	D1
C16	*A3	C174	*C3	C332	D2	C451	F3	C601	*F2	C908	C1	CN300	E2	IC702	F1	Q150	*D4	R102	*C3	R206	*D4	R370	*E2	R523	*E4	R903	*C1		
C17	B4	C175	D3	C333	*E2	C452	E3	C602	*F1	C909	*B1	CN400	E3	IC800	A1	Q200	*D4	R103	B1	R207	D4	R371	*E2	R524	*E4	R904	B1	*:B SIDE	
C18	*B1	C176	C3	C334	*E2	C453	E3	C603	*F2	C910	*C1	CN500	E4	IC801	*C2	Q301	D2	R104	*B3	R208	D4	R372	E2	R525	*E4	R905	*B1		
C19	*B1	C177	*D3	C335	*E2	C454	*F3	C604	*F2	C911	*C1			IC802	G4	Q302	D2	R105	*B3	R209	D4	R373	E2	R526	*E4	R906	*B2		
C20	*B2	C178	*C3	C336	*E2	C455	F3	C605	*F2	C912	*B1	D1	*A3	IC803	B2	Q303	*D2	R106	*B3	R210	*D4	R375	*D2	R527	*E4	R907	*C1		
C21	*B3	C179	*D3	C337	*E2	C456	E3	C606	*F2	C913	*C1	D2	*A3	IC804	H1	Q304	*D2	R107	*B3	R211	*D4	R376	*D2	R528	*E4	R908	*C1		
C22	B2	C180	D3	C338	E2	C457	F3	C607	*F2	C930	*C2	D3	*B3	IC805	G3	Q305	*D2	R108	*B3	R212	*D4	R377	*D2	R529	*E4	R909	C1		
C23	B2	C181	D3	C339	*E2	C458	F3	C608	*F2	C931	*C2	D4	*B3	IC806	G3	Q306	*E2	R109	*B3	R213	*D4	R378	D2	R530	*E4	R910	C1		
C24	B2	C182	*D3	C340	E2	C459	F3	C609	D1	C932	C2	D5	*A2	IC807	H4	Q307	*E2	R110	*B4	R214	*C2	R379	D2	R531	F4	R911	C1		
C25	*B3	C183	*D3	C341	*E2	C460	F3	C610	D1	C933	C2	D6	*A2	IC808	*F2	Q308	E2	R111	*B4	R215	*C2	R401	D3	R532	*F4	R912	C1		
C26	*B3	C184	C3	C342	*E2	C461	F3	C611	E1	C934	*C2	D100	*B4	IC809	*G3	Q309	E2	R112	*B4	R216	*C2	R402	D3	R533	*F4	R913	*B1		
C27	*B2	C185	*D4	C343	*E2	C462	*G3	C612	D1	C935	*C2	D150	*B4	IC810	*G4	Q401	D3	R115	*C3	R217	D4	R403	D3	R534	*F4	R914	*C1		
C28	*B2	C186	C4	C344	*E2	C465	D3	C613	D1	C936	C2			IC900	B2	Q402	D3	R116	*C3	R218	D4	R404	D3	R535	*F4	R915	*B1		
C29	*B3	C187	D4	C345	*E2	C466	*E3	C614	D1	C937	C2	DL300	D2	IC901	C1	Q403	*D3	R117	C3	R219	D4	R405	D3	R536	*F4	R916	*C1		
C30	*B3	C188	D4	C346	E2	C480	E3	C615	*H2	C938	C2	DL400	E3	IC902	B2	Q404	*E3	R118	C3	R220	*D4	R406	D3	R537	F4	R917	*C1		
C31	*B3	C189	D4	C347	*E2	C481	E3	C616	*H2	C939	*B2	DL500	E4	IC930	B2	Q405	*D3	R119	*C3	R221	*C4	R407	D3	R538	F4	R918	*C1		
C32	B4	C190	*D4	C348	*E2	C482	*E3	C617	*H2	C940	*C2			IC931	C2	Q406	*F3	R120	*C3	R222	*D4	R408	D3	R539	F4	R919	*C1		
C33	*B2	C191	C3	C349	E2	C483	E3	C618	D1	C941	*C2	E300	E1	IC950	*C2	Q407	*F3	R121	*C3	R223	*C4	R409	D3	R540	F4	R920	*B1		
C34	A2	C192	C3	C350	E2	C484	*E3	C650	*F3	C942	*B2	E400	E3	IC952	*H2	Q408	E3	R122	C3	R224	*D4	R410	D3	R541	F4	R930	C2		
C35	*A2	C200	*D4	C351	E2	C485	*E3	C651	*F3	C943	*C2	E401	*B1	IC953	F1	Q409	E3	R123	C3	R225	*D4	R411	*D3	R542	*F4	R931	C2		
C36	*A2	C201	*C3	C352	E2	C486	E3	C652	*F3	C950	*C2	E500	E4	IC954	F1	Q501	E4	R124	*C3	R226	D4	R412	*D3	R543	*F4	R932	*C2		
C37	A2	C202	D4	C353	E2	C500	*E4	C653	*F3	C951	B2	E900	C2	IC980	G2	Q502	E4	R125	*C3	R227	*D4	R413	*D3	R544	E4	R933	*C2		
C38	A2	C203	C3	C354	*F2	C501	*E4	C654	*F3	C952	*B2			IC981	*G1	Q503	*E4	R126	C3	R228	*D4	R414	D3	R545	*E4	R934	B2		
C39	A2	C204	*C3	C355	E2	C502	*E4	C655	*F3	C980	*H1	FL300	E2	IC982	*G1	Q504	*E4	R127	*C3	R229	*D4	R415	D3	R546	E4	R935	*B2		
C40	*A2	C205	D4	C356	E2	C503	*E4	C656	*F3	C981	*H2	FL400	E3	IC983	*G1	Q505	*E4	R128	C3	R230	*D4	R416	D3	R560	E4	R936	*B2		
C41	*A2	C206	C3	C357	F2	C505	*E4	C657	*F3	C982	*H2	FL500	F4			Q506	*F4	R129	C3	R231	*C4	R417	E3	R561	E4	R937	*C2		
C42	*A2	C207	*D4	C358	F2	C506	E4	C658	*F3	C983	*H2	FL900	C1	L1	*B1	Q507	*F4	R130	*C3	R232	*D4	R418	D3	R562	E4	R938	*C2		
C43	*A2	C208	D4	C359	F2	C507	*E4	C659	*F3	C984	*H1	FL901	C1	L2	*A2	Q508	F4	R131	C3	R233	*D4	R419	E3	R563	*F4	R939	C2		
C44	B2	C209	*D4	C360	F2	C508	*E4	C660	E1	C985	*G2	FL930	C2	L3	*A3	Q509	F4	R132	*C3	R234	*D4	R420	*D3	R564	F4	R940	C2		
C45	*A2	C210	*D4	C361	F2	C509	*E4	C661	E1	C986	*G2	FL931	C2	L4	*B1	Q900	*C1	R133	*C3	R235	D4	R421	*D3	R565	*F4	R941	C2		
C46	*A2	C211	D4	C362	F2	C510	*E4	C662	E1	C987	*G2			L5	*B2	Q901	*C1	R134	*C3	R236	*D4	R422	*D3	R566	F4	R942	C2		
C47	*A2	C212	D4	C365	D2	C511	*E4	C663	E1	C988	*G1	IC1	B1	L6	*B3	Q930	*C2	R135	*C3	R237	*D4	R423	*D3	R567	E4	R943	*B2		
C48	A3	C213	D4	C366	*D2	C512	*E4	C664	E1	C989	*G2	IC2	A3	L7	*A2	Q931	*C2	R136	C3	R238	D4	R424	*D3	R568	*F4	R944	*C2		
C49	A3	C214	*D4	C370	D3	C513	*E4	C665	*H2	C990	*H1	IC3	*B2	L8	*A2			R137	C3	R239	D4	R425	*D3	R569	*F4	R945	*B2		
C50	A3	C215	*C4	C371	D2	C514	E4	C666	*H2	C991	*G2	IC4	B1	L9	A3	R1	B1	R138	*C4	R240	*D4	R426	*D3	R570	*F4	R946	*C2		
C51	*A3	C216	*D4	C380	D2	C515	*E4	C667	*H2	C992	*G2	IC5	B3	L10	A3	R2	B1	R139	*C3	R241	C4	R427	*E3	R571	*F4	R947	*C2		
C52	A3	C217	*D4	C381	E2	C516	E4	C668	*D1	C993	G2	IC6	A2	L100	B3	R3	B1	R140	*C4	R242	*C4	R428	*E3	R572	F4	R948	*C2		
C100	*C3	C218	*D4	C382	*E2	C517	E4	C700	*G4	C994	*G1	IC7	A2	L101	B3	R4	A1	R141	*C4	R243	D4	R429	*E3	R573	F4	R949	*C2		
C101	B3	C219	*D4	C383	E2	C518	E4	C701	*G4	C995	*G1	IC8	B2	L115	*C3	R5	*A3	R142	*C4	R244	*D4	R430	*E3	R576	*E4	R951	*G1		
C102	*B3	C220	*D4	C384	*E2	C519	E4	C702	*G4	C996	*G1	IC9	B3	L150	B3	R6	*A1	R143	*C4	R301	D2	R431	F3	R577	*E4	R952	*H2		
C103	*B3	C221	*C4	C385	*E2	C520	E4	C703	*G4	C997	*G1	IC10	B3	L151	C3	R7	*B1	R144	C4	R302	D2	R432	*F3	R578	E4	R953	F1		
C104	B3	C222	*D4	C386	E2	C521	*E4	C704	*G4	C998	*G1	IC11	*A3	L165	*C3	R8	*B1	R145	C3	R303	D2	R433	*E3	R600	*F2	R954	*H1		
C105	*B4	C223	*D4	C400	*E3	C522	*E4	C705	*G4			IC100	*B3	L200	C3	R9	*B2	R150	C3	R304	D2	R434	*F3	R601	*F2	R955	A1		
C106	*B4	C224	*D4	C401	*E3	C523	*E4	C706	*G4	CL9	A2	IC115	C3	L201	D4	R10	A3	R151	B1	R305	D2	R435	*F3	R602	F2	R956	*C2		
C107	B3	C225	*D4	C402	*D3	C524	*E4	C707	*G4	CL13	A3	IC116	C3	L300	*E2	R11	A3	R152	*C3	R306	D2	R436	*F3	R603	*F2	R957	*C1		
C108	B3	C226	D4	C403	*D3	C525	*E4	C708	*G4	CL14	A3	IC117	*C3	L301	*D2	R12	A3	R153	*B1	R307	D2	R437	F3	R604	*F2	R958	*B2		
C115	C3	C227	D4	C405	*E3	C526	*E4	C709	*F1	CL15	A3	IC118	C4	L302	*D2	R13	*A2	R154	*B3	R308	D2	R438	F3	R605	*F2	R959	*B2		
C116	*C3	C228	D4	C406	D3	C527	*E4	C710	*F1	CL51	A1	IC150	*B3	L303	*D2	R14	*A3	R155	*B3	R309	D2	R439	E3	R606	*F2	R960	*B2		
C117	C3	C229	*C4	C407	*D3	C528	*E4	C711	*F1	CL100	C3	IC156	C3	L304	*D2	R15	*B3	R156	*B3	R310	D2	R440	F3	R607	*F2	R961	F1		
C118	C3	C230	*D4	C408	*D3	C529	*E4	C712	*F1	CL101	B3	IC165	D3	L305	*F2	R16	*A3	R157	*B3	R311	*D2	R441	E3	R608	*F2	R962	*H2		
C119	*C3	C231	*D4	C409	*D3	C530	*E4	C713	E1	CL102	B3	IC166	D3	L306	*E2	R17	*A3	R158	*B3	R312	*D2	R442	*F3	R609	*G1	R980	*H1		
C120	C3	C232	*D4	C410	*D3	C531	*E4	C714	F1	CL150	D3	IC167	*D3	L307	F2	R18	*A2	R159	*B3	R313	*D2	R443	*F3	R611	*D1	R981	G2		
C121	C3	C233	C4	C411	*D3	C532	E4	C800	*A1	CL151	B3	IC168	D4	L308	F2	R19	B1	R160	*C4	R314	D2	R460	E3	R612	*D1	R982	G2		
C122	C3	C234	D4	C412	*D3	C533	*E4	C801	*B2	CL152	B3	IC200	*D4	L400	*E3	R20	B1	R161	*C4	R315	D1	R461	E3	R613	*H2	R983	G2		
C123	*C3	C235	*D4	C413	*D3	C534	*F4	C802	*G1	CL200	D4	IC201	*C4	L401	*D3	R21	B1	R162	*C4	R316	D2	R462	E3	R615	*G2	R984	G2		
C124	*C3	C236	*D4	C414	D3	C535	*F4	C803	*G3	CL201	C3	IC202	*D4	L402	*D3	R22	*B1	R165	*D3	R317	D2	R463	*E3	R616	*G2	R985	*H2		
C125	C3	C237	*D4	C415	*D3	C536	*F4	C804	*G3	CL202	C3	IC203	*D4	L403	*D3	R23	*B1	R166	*D3	R318	D2	R464	E3	R617	*G2	R986	*G1		
C126	C3	C238	*D4	C416	D3	C537	*F4	C805	*A1	CL203	C3	IC204	C3	L404	*D3	R24	B3	R167	D3	R319	D2	R465	*E3	R618	*G2	R987	*G1		
C127	*C3	C239	*D4	C417	D3	C538	F4	C806	*B2	CL300	E2	IC205	*C4	L405	*F3	R25	B3	R168	D3	R320	*D2	R466	E3	R620	E1	R988	*G1		
C128	*C3	C240	D4	C418	D3	C539	*F4	C807	*H1	CL301	E2	IC206	*D4	L406	*E3	R26	B3	R169	*D3	R321	*D2	R467	E3	R650	*F3	R989	*G1		
C129	*C3	C241	D4	C419	D3	C540	F4	C808	*G3	CL302	E2	IC207	*C3	L407	F3	R27	*B2	R170	*D3	R322	*D2	R468	*E3	R651	*F3				
C130	C3	C300	*E2	C420	D3	C541	*F4	C809	*G3	CL303	F2	IC300	D2	L408	F3	R28	*B3	R171	*D3	R323	*D2	R469	*E3	R652	F3	RB1	B1		
C131	C3	C301	*D2	C421	*D3	C542	*F4	C810	*A1	CL304	*B1	IC301	E2	L500	*F4	R29	*B3	R172	C3	R324	*D2	R470	*E3	R653	*F3	RB2	*B1		
C132	*C3	C302	*D2	C422	*D3	C543	*F4	C811	*A1	CL400	E3	IC302	*F2	L501	*E4	R30	*B3	R173	D3	R325	*D2	R471	*E3	R654	*F3	RB3	B1		
C133	*C3	C303	*D2	C423	*D3	C544	*F4	C812	*B2	CL401	E3	IC303	*F2	L502	*E4	R31	*B3	R174	*D3	R326	*D2	R472	E3	R655	*F3	RB4	*B1		
C134	C3	C305	*D2	C424	*D3	C545	*F4	C813	*B2	CL402	E3	IC305	*D2	L503	*E4	R32	*B3	R175	*D3	R327	*E2	R473	E3	R656	*F3	RB600	F2		
C135	*C4	C306	D2	C425	*E3	C546	F4	C814	*H1	CL403	*A1	IC306	*D3	L504	*E4	R33	*B3	R176	C3	R328	*E2	R475	D2	R657	E1	RB601	F2		
C136	C4	C307	*D2	C426	*E3	C547	*F4	C815	*H1	CL500	F4	IC400	D3	L505	*F4	R34	*B2	R177	*D3	R329	*D2	R477	D2	R658	E1	RB602	*D1		
C137	C4	C308	*D2	C427	*E3	C548	*F4	C816	*G3	CL501	F4	IC401	F3	L506	*F4	R35	A1	R178	C3	R330	*D2	R478	D3	R659	*F3	RB650	F3		
C138	C4	C309	*D2	C428	*E3	C549	F4	C817	*H3	CL502	F4	IC402	*F3	L507	F4	R36	*A1	R179	D3	R331	E2	R479	D3	R660	*F2	RB651	F3		
C139	C4	C310	*D2	C429	*E3	C550	F4	C818	*G3	CL503	*B1	IC403	*F3	L508	G4	R37	A2	R180	*D3	R332	*E2	R501	E4	R700	*G4	RB652	E1		
C140	*C4	C311	*D2	C430	*E3	C551	F4	C819	*H3	CL600	F2	IC500	E4	L600	*F2	R38	A2	R181	C3	R333	*E2	R502	E4	R701	*G4	RB700	G4		
C141	C3	C312	*D2	C431	*E3	C552	F4	C820	H4	CL650	F3	IC501	F4	L601	D1	R39	*B2	R182	*D3	R334	*E2	R503	E4	R702	F4	RB701	G4		
C142	C3	C313	*D2	C432	E3	C553	F4	C821	*F2	CL700	G4	IC502	*G4	L602	*H2	R40	A2	R183	*D3	R335	*F2	R504	E4	R703	*G4	RB702	F1		
C150	*C3	C314	D2	C433	*E3	C554	*F4	C822	*G3	CL800	A1	IC503	*G4	L650	*F3	R41	*A2	R184	*C3	R336	*E2	R505	E4	R704	*G4	RB703	F1		
C151	B3	C315	*D2	C434	*F3	C555	F4	C823	*G4	CL801	B2	IC504	*E4	L651	E1	R42	*A2	R185	*D3	R337	E2	R506	E4	R705	*G4	RB704	F1		
C152	*B3	C316	D2	C435	*F3	C556	F4	C824	*F2	CL802	G1	IC600	F2	L700	*G4	R43	*A2	R186	C3	R338	E2	R507	E4	R706	*G4	RB800	*H4		

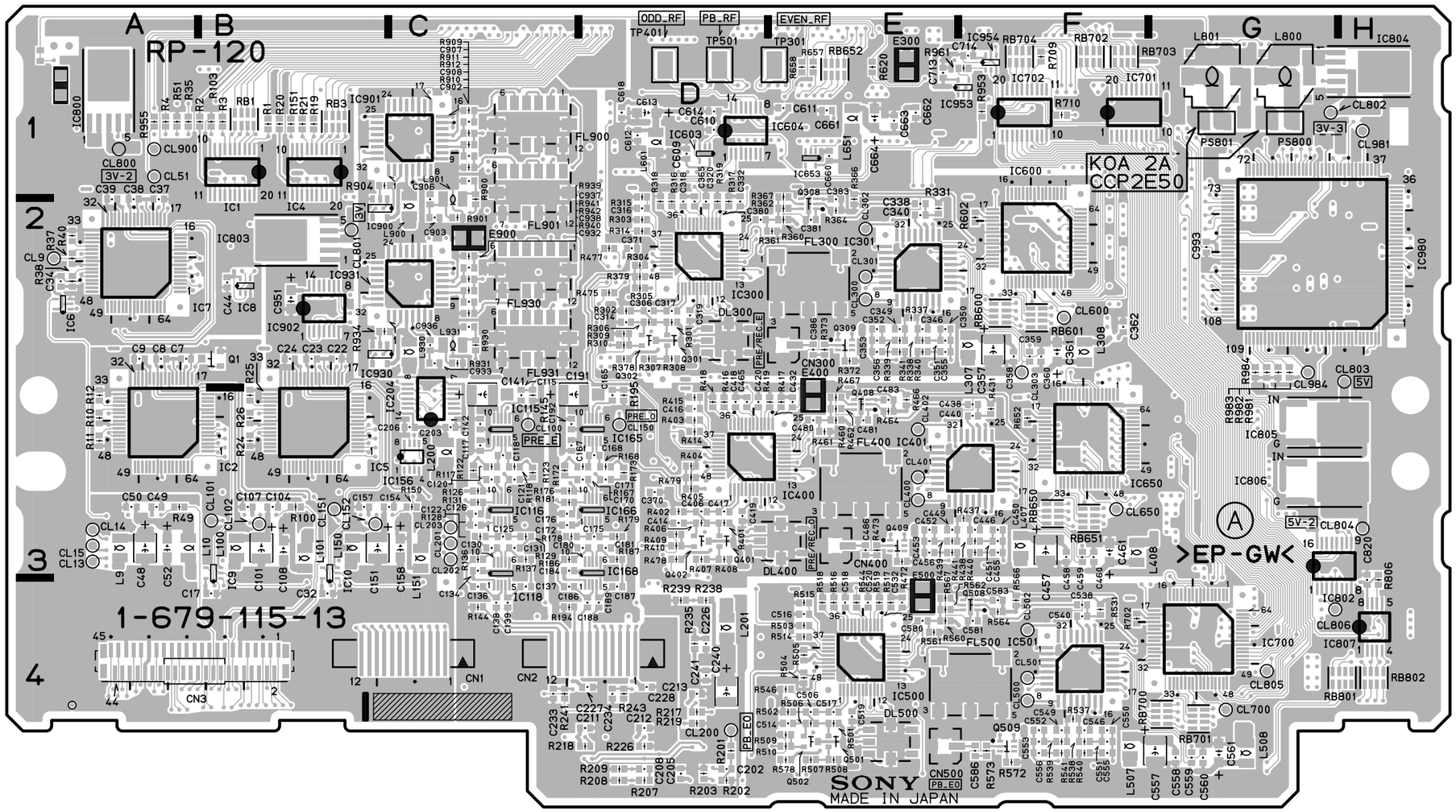

RP-120 -A SIDE-

SUFFIX: -13

FOR DSR-1800/P

http://getMANUAL.com

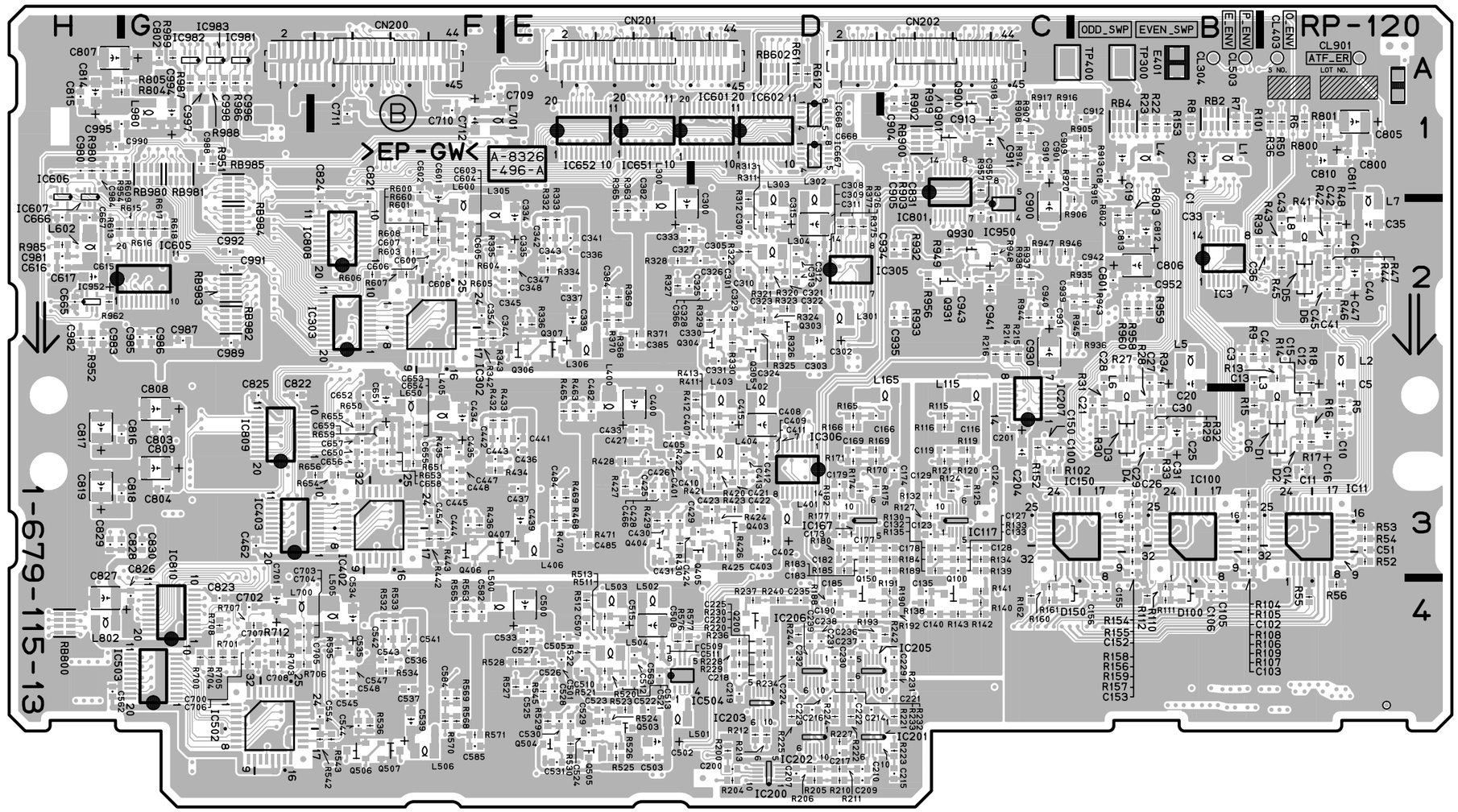

RP-120 (1-679-115-12)

C1	*B1	C153	*B3	C317	D2	C436	*E3	C557	G4	C827	*H4	CL805	G4	IC604	D1	L901	C2	R49	A3	R192	*C4	R360	E2	R513	*E4	R800	*A1	RB982	*G2
C2	*B1	C154	C3	C318	D2	C437	*E3	C558	G4	C828	*G3	CL806	G4	IC605	*G2	L930	C2	R50	*A1	R193	*D4	R361	E2	R514	E4	R801	*A1	RB983	*G2
C3	*B2	C155	*B4	C319	D2	C438	F3	C559	G4	C829	*H3	CL900	A1	IC606	*H1	L931	C2	R51	A1	R194	C4	R362	E2	R515	E4	R802	*B2	RB984	*G2
C4	*A2	C156	*B4	C320	D2	C439	*E3	C560	G4	C830	*G3	CL981	H1	IC607	*H1	L980	*G1	R52	*A3	R195	D3	R363	*E2	R516	E4	R803	*B2	RB985	*G1
C5	*A2	C157	B3	C321	*D2	C440	F3	C561	G4	C831	*C1	CL984	G2	IC650	F3			R53	*A3	R200	*D4	R364	E2	R517	E4	R804	*G1		
C6	*B3	C158	C3	C322	*D2	C441	*E3	C562	*H4	C900	*C2			IC651	*E1	PS800	G1	R54	*A3	R201	D4	R365	*E2	R518	E4	R805	*G1	TP300	*B1
C7	A2	C165	D3	C323	*D2	C442	*F3	C563	*E4	C901	*C1	CN1	C4	IC652	*E1	PS801	G1	R55	*A4	R202	D4	R366	E2	R519	E4	R806	H4	TP301	E1
C8	A2	C166	*D3	C324	*D2	C443	*F3	C580	E4	C902	C1	CN2	D4	IC653	E1			R56	*A4	R203	D4	R367	E1	R520	*E4	R900	C2	TP400	*C1
C9	A2	C167	C3	C325	*E2	C444	*F3	C581	F4	C903	C2	CN3	A4	IC700	G4	Q1	B2	R100	B3	R204	*D4	R368	*E2	R521	*E4	R901	C2	TP401	D1
C10	*A3	C168	D3	C326	*D2	C445	*F3	C582	*F4	C904	*C1	CN200	*F1	IC701	F1	Q100	*C4	R101	*B1	R205	*D4	R369	*E2	R522	*E4	R902	*C1	TP501	D1
C11	*A3	C169	*D3	C327	*E2	C446	F3	C583	F4	C905	*C1	CN201	*E1	IC702	F1	Q150	*D4	R102	*C3	R206	*D4	R370	*E2	R523	*E4	R903	*C1		
C12	*A2	C170	D3	C328	*D2	C447	*F3	C584	*F4	C906	C2	CN202	*C1	IC800	A1	Q200	*D4	R103	B1	R207	D4	R371	*E2	R524	*E4	R904	B1	*:B SIDE	
C13	*B2	C171	D3	C329	*D2	C448	*F3	C585	*F4	C907	C1	CN300	E2	IC801	*C2	Q301	D2	R104	*B3	R208	D4	R372	E2	R525	*E4	R905	*B1		
C14	*A3	C172	C3	C330	*D2	C449	E3	C586	F4	C908	C1	CN400	E3	IC802	G4	Q302	D2	R105	*B3	R209	D4	R373	E2	R526	*E4	R906	*B2		
C15	*A3	C173	*D3	C331	*D2	C450	F3	C600	*F2	C909	*B1	CN500	E4	IC803	B2	Q303	*D2	R106	*B3	R210	*D4	R375	*D2	R527	*E4	R907	*C1		
C16	*A3	C174	*C3	C332	D2	C451	F3	C601	*F2	C910	*C1			IC804	H1	Q304	*D2	R107	*B3	R211	*D4	R376	*D2	R528	*E4	R908	*C1		
C17	B4	C175	D3	C333	*E2	C452	E3	C602	*F1	C911	*C1	D1	*A3	IC805	G3	Q305	*D2	R108	*B3	R212	*D4	R377	*D2	R529	*E4	R909	C1		
C18	*B1	C176	C3	C334	*E2	C453	E3	C603	*F2	C912	*B1	D2	*A3	IC806	G3	Q306	*E2	R109	*B3	R213	*D4	R378	D2	R530	*E4	R910	C1		
C19	*B1	C177	*D3	C335	*E2	C454	*F3	C604	*F2	C913	*C1	D3	*B3	IC807	H4	Q307	*E2	R110	*B4	R214	*C2	R379	D2	R531	F4	R911	C1		
C20	*B2	C178	*C3	C336	*E2	C455	F3	C605	*F2	C930	*C2	D4	*B3	IC808	*F2	Q308	E2	R111	*B4	R215	*C2	R401	D3	R532	*F4	R912	C1		
C21	*B3	C179	*D3	C337	*E2	C456	E3	C606	*F2	C931	*C2	D5	*A2	IC809	*G3	Q309	E2	R112	*B4	R216	*C2	R402	D3	R533	*F4	R913	*B1		
C22	B2	C180	D3	C338	E2	C457	F3	C607	*F2	C932	C2	D6	*A2	IC810	*G4	Q401	D3	R115	*C3	R217	D4	R403	D3	R534	*F4	R914	*C1		
C23	B2	C181	D3	C339	*E2	C458	F3	C608	*F2	C933	C2	D100	*B4	IC900	B2	Q402	D3	R116	*C3	R218	D4	R404	D3	R535	*F4	R915	*B1		
C24	B2	C182	*D3	C340	E2	C459	F3	C609	D1	C934	*C2	D150	*B4	IC901	C1	Q403	*D3	R117	C3	R219	D4	R405	D3	R536	*F4	R916	*C1		
C25	*B3	C183	*D3	C341	*E2	C460	F3	C610	D1	C935	*C2			IC902	B2	Q404	*E3	R118	C3	R220	*D4	R406	D3	R537	F4	R917	*C1		
C26	*B3	C184	C3	C342	*E2	C461	F3	C611	E1	C936	C2	DL300	D2	IC930	B2	Q405	*D3	R119	*C3	R221	*C4	R407	D3	R538	F4	R918	*C1		
C27	*B2	C185	*D4	C343	*E2	C462	*G3	C612	D1	C937	C2	DL400	E3	IC931	C2	Q406	*F3	R120	*C3	R222	*D4	R408	D3	R539	F4	R919	*C1		
C28	*B2	C186	C4	C344	*E2	C465	D3	C613	D1	C938	C2	DL500	E4	IC950	*C2	Q407	*F3	R121	*C3	R223	*C4	R409	D3	R540	F4	R920	*B1		
C29	*B3	C187	D4	C345	*E2	C466	*E3	C614	D1	C939	*B2			IC952	*H2	Q408	E3	R122	C3	R224	*D4	R410	D3	R541	F4	R930	C2		
C30	*B3	C188	D4	C346	E2	C480	E3	C615	*H2	C940	*C2	E300	E1	IC953	F1	Q409	E3	R123	C3	R225	*D4	R411	*D3	R542	*F4	R931	C2		
C31	*B3	C189	D4	C347	*E2	C481	E3	C616	*H2	C941	*C2	E400	E3	IC954	F1	Q501	E4	R124	*C3	R226	D4	R412	*D3	R543	*F4	R932	*C2		
C32	B4	C190	*D4	C348	*E2	C482	*E3	C617	*H2	C942	*B2	E401	*B1	IC980	G2	Q502	E4	R125	*C3	R227	*D4	R413	*D3	R544	E4	R933	*C2		
C33	*B2	C191	C3	C349	E2	C483	E3	C650	*F3	C943	*C2	E500	E4	IC981	*G1	Q503	*E4	R126	C3	R228	*D4	R414	D3	R545	*E4	R934	B2		
C34	A2	C192	C3	C350	E2	C484	*E3	C651	*F3	C950	*C2	E900	C2	IC982	*G1	Q504	*E4	R127	*C3	R229	*D4	R415	D3	R546	E4	R935	*B2		
C35	*A2	C200	*D4	C351	E2	C485	*E3	C652	*F3	C951	B2			IC983	*G1	Q505	*E4	R128	C3	R230	*D4	R416	D3	R560	E4	R936	*B2		
C36	*A2	C201	*C3	C352	E2	C486	E3	C653	*F3	C952	*B2	FL300	E2			Q506	*F4	R129	C3	R231	*C4	R417	E3	R561	E4	R937	*C2		
C37	A2	C202	D4	C353	E2	C500	*E4	C654	*F3	C980	*H1	FL400	E3	L1	*B1	Q507	*F4	R130	*C3	R232	*D4	R418	D3	R562	E4	R938	*C2		
C38	A2	C203	C3	C354	*F2	C501	*E4	C655	*F3	C981	*H2	FL500	F4	L2	*A2	Q508	F4	R131	C3	R233	*D4	R419	E3	R563	*F4	R939	C2		
C39	A2	C204	*C3	C355	E2	C502	*E4	C656	*F3	C982	*H2	FL900	C1	L3	*A3	Q509	F4	R132	*C3	R234	*D4	R420	*D3	R564	F4	R940	C2		
C40	*A2	C205	D4	C356	E2	C503	*E4	C657	*F3	C983	*H2	FL901	C1	L4	*B1	Q900	*C1	R133	*C3	R235	D4	R421	*D3	R565	*F4	R941	C2		
C41	*A2	C206	C3	C357	F2	C505	*E4	C658	*F3	C984	*H1	FL930	C2	L5	*B2	Q901	*C1	R134	*C3	R236	*D4	R422	*D3	R566	F4	R942	C2		
C42	*A2	C207	*D4	C358	F2	C506	E4	C659	*F3	C985	*G2	FL931	C2	L6	*B3	Q930	*C2	R135	*C3	R237	*D4	R423	*D3	R567	E4	R943	*B2		
C43	*A2	C208	D4	C359	F2	C507	*E4	C660	E1	C986	*G2			L7	*A2	Q931	*C2	R136	C3	R238	D4	R424	*D3	R568	*F4	R944	*C2		
C44	B2	C209	*D4	C360	F2	C508	*E4	C661	E1	C987	*G2	IC1	B1	L8	*A2			R137	C3	R239	D4	R425	*D3	R569	*F4	R945	*B2		
C45	*A2	C210	*D4	C361	F2	C509	*E4	C662	E1	C988	*G1	IC2	A3	L9	A3	R1	B1	R138	*C4	R240	*D4	R426	*D3	R570	*F4	R946	*C2		
C46	*A2	C211	D4	C362	F2	C510	*E4	C663	E1	C989	*G2	IC3	*B2	L10	A3	R2	B1	R139	*C3	R241	C4	R427	*E3	R571	*F4	R947	*C2		
C47	*A2	C212	D4	C365	D2	C511	*E4	C664	E1	C990	*H1	IC4	B1	L100	B3	R3	B1	R140	*C4	R242	*C4	R428	*E3	R572	F4	R948	*C2		
C48	A3	C213	D4	C366	*D2	C512	*E4	C665	*H2	C991	*G2	IC5	B3	L101	B3	R4	A1	R141	*C4	R243	D4	R429	*E3	R573	F4	R949	*C2		
C49	A3	C214	*D4	C370	D3	C513	*E4	C666	*H2	C992	*G2	IC6	A2	L115	*C3	R5	*A3	R142	*C4	R244	*D4	R430	*E3	R576	*E4	R951	*G1		
C50	A3	C215	*C4	C371	D2	C514	E4	C667	*H2	C993	G2	IC7	A2	L150	B3	R6	*A1	R143	*C4	R301	D2	R431	F3	R577	*E4	R952	*H2		
C51	*A3	C216	*D4	C380	D2	C515	*E4	C700	*G4	C994	*G1	IC8	B2	L151	C3	R7	*B1	R144	C4	R302	D2	R432	*F3	R578	E4	R953	F1		
C52	A3	C217	*D4	C381	E2	C516	E4	C701	*G4	C995	*G1	IC9	B3	L165	*C3	R8	*B1	R145	C3	R303	D2	R433	*E3	R600	*F2	R954	*H1		
C100	*C3	C218	*D4	C382	*E2	C517	E4	C702	*G4	C996	*G1	IC10	B3	L200	C3	R9	*B2	R150	C3	R304	D2	R434	*F3	R601	*F2	R955	A1		
C101	B3	C219	*D4	C383	E2	C518	E4	C703	*G4	C997	*G1	IC11	*A3	L201	D4	R10	A3	R151	B1	R305	D2	R435	*F3	R602	F2	R956	*C2		
C102	*B3	C220	*D4	C384	*E2	C519	E4	C704	*G4	C998	*G1	IC100	*B3	L300	*E2	R11	A3	R152	*C3	R306	D2	R436	*F3	R603	*F2	R957	*C1		
C103	*B3	C221	*C4	C385	*E2	C520	E4	C705	*G4			IC115	C3	L301	*D2	R12	A3	R153	*B1	R307	D2	R437	F3	R604	*F2	R958	*B2		
C104	B3	C222	*D4	C386	E2	C521	*E4	C706	*G4	CL9	A2	IC116	C3	L302	*D2	R13	*A2	R154	*B3	R308	D2	R438	F3	R605	*F2	R959	*B2		
C105	*B4	C223	*D4	C400	*E3	C522	*E4	C707	*G4	CL13	A3	IC117	*C3	L303	*D2	R14	*A3	R155	*B3	R309	D2	R439	E3	R606	*F2	R960	*B2		
C106	*B4	C224	*D4	C401	*E3	C523	*E4	C708	*G4	CL14	A3	IC118	C4	L304	*D2	R15	*B3	R156	*B3	R310	D2	R440	F3	R607	*F2	R961	F1		
C107	B3	C225	*D4	C402	*D3	C524	*E4	C709	*F1	CL15	A3	IC150	*B3	L305	*F2	R16	*A3	R157	*B3	R311	*D2	R441	E3	R608	*F2	R962	*H2		
C108	B3	C226	D4	C403	*D3	C525	*E4	C710	*F1	CL51	A1	IC156	C3	L306	*E2	R17	*A3	R158	*B3	R312	*D2	R442	*F3	R609	*G1	R980	*H1		
C115	C3	C227	D4	C405	*E3	C526	*E4	C711	*F1	CL100	C3	IC165	D3	L307	F2	R18	*A2	R159	*B3	R313	*D2	R443	*F3	R611	*D1	R981	G2		
C116	*C3	C228	D4	C406	D3	C527	*E4	C712	*F1	CL101	B3	IC166	D3	L308	F2	R19	B1	R160	*C4	R314	D2	R460	E3	R612	*D1	R982	G2		
C117	C3	C229	*C4	C407	*D3	C528	*E4	C713	E1	CL102	B3	IC167	*D3	L400	*E3	R20	B1	R161	*C4	R315	D1	R461	E3	R613	*H2	R983	G2		
C118	C3	C230	*D4	C408	*D3	C529	*E4	C714	F1	CL150	D3	IC168	D4	L401	*D3	R21	B1	R162	*C4	R316	D2	R462	E3	R615	*G2	R984	G2		
C119	*C3	C231	*D4	C409	*D3	C530	*E4	C800	*A1	CL151	B3	IC200	*D4	L402	*D3	R22	*B1	R165	*D3	R317	D2	R463	*E3	R616	*G2	R985	*H2		
C120	C3	C232	*D4	C410	*D3	C531	*E4	C801	*B2	CL152	B3	IC201	*C4	L403	*D3	R23	*B1	R166	*D3	R318	D2	R464	E3	R617	*G2	R986	*G1		
C121	C3	C233	C4	C411	*D3	C532	E4	C802	*G1	CL200	D4	IC202	*D4	L404	*D3	R24	B3	R167	D3	R319	D2	R465	*E3	R618	*G2	R987	*G1		
C122	C3	C234	D4	C412	*D3	C533	*E4	C803	*G3	CL201	C3	IC203	*D4	L405	*F3	R25	B3	R168	D3	R320	*D2	R466	E3	R620	E1	R988	*G1		
C123	*C3	C235	*D4	C413	*D3	C534	*F4	C804	*G3	CL202	C3	IC204	C3	L406	*E3	R26	B3	R169	*D3	R321	*D2	R467	E3	R650	*F3	R989	*G1		
C124	*C3	C236	*D4	C414	D3	C535	*F4	C805	*A1	CL203	C3	IC205	*C4	L407	F3	R27	*B2	R170	*D3	R322	*D2	R468	*E3	R651	*F3				
C125	C3	C237	*D4	C415	*D3	C536	*F4	C806	*B2	CL300	E2	IC206	*D4	L408	F3	R28	*B3	R171	*D3	R323	*D2	R469	*E3	R652	F3	RB1	B1		
C126	C3	C238	*D4	C416	D3	C537	*F4	C807	*H1	CL301	E2	IC207	*C3	L500	*F4	R29	*B3	R172	C3	R324	*D2	R470	*E3	R653	*F3	RB2	*B1		
C127	*C3	C239	*D4	C417	D3	C538	F4	C808	*G3	CL302	E2	IC300	D2	L501	*E4	R30	*B3	R173	D3	R325	*D2	R471	*E3	R654	*F3	RB3	B1		
C128	*C3	C240	D4	C418	D3	C539	*F4	C809	*G3	CL303	F2	IC301	E2	L502	*E4	R31	*B3	R174	*D3	R326	*D2	R472	E3	R655	*F3	RB4	*B1		
C129	*C3	C241	D4	C419	D3	C540	F4	C810	*A1	CL304	*B1	IC302	*F2	L503	*E4	R32	*B3	R175	*D3	R327	*E2	R473	E3	R656	*F3	RB600	F2		
C130	C3	C300	*E2	C420	D3	C541	*F4	C811	*A1	CL400	E3	IC303	*F2	L504	*E4	R33	*B3	R176	C3	R328	*E2	R475	D2	R657	E1	RB601	F2		
C131	C3	C301	*D2	C421	*D3	C542	*F4	C812	*B2	CL401	E3	IC305	*D2	L505	*F4	R34	*B2	R177	*D3	R329	*D2	R477	D2	R658	E1	RB602	*D1		
C132	*C3	C302	*D2	C422	*D3	C543	*F4	C813	*B2	CL402	E3	IC306	*D3	L506	*F4	R35	A1	R178	C3	R330	*D2	R478	D3	R659	*F3	RB650	F3		
C133	*C3	C303	*D2	C423	*D3	C544	*F4	C814	*H1	CL403	*A1	IC400	D3	L507	F4	R36	*A1	R179	D3	R331	E2	R479	D3	R660	*F2	RB651	F3		
C134	C3	C305	*D2	C424	*D3	C545	*F4	C815	*H1	CL500	F4	IC401	F3	L508	G4	R37	A2	R180	*D3	R332	*E2	R501	E4	R700	*G4	RB652	E1		
C135	*C4	C306	D2	C425	*E3	C546	F4	C816	*G3	CL501	F4	IC402	*F3	L600	*F2	R38	A2	R181	C3	R333	*E2	R502	E4	R701	*G4	RB700	G4		
C136	C4	C307	*D2	C426	*E3	C547	*F4	C817	*H3	CL502	F4	IC403	*F3	L601	D1	R39	*B2	R182	*D3	R334	*E2	R503	E4	R702	F4	RB701	G4		
C137	C4	C308	*D2	C427	*E3	C548	*F4	C818	*G3	CL503	*B1	IC500	E4	L602	*H2	R40	A2	R183	*D3	R335	*F2	R504	E4	R703	*G4	RB702	F1		
C138	C4	C309	*D2	C428	*E3	C549	F4	C819	*H3	CL600	F2	IC501	F4	L650	*F3	R41	*A2	R184	*C3	R336	*E2	R505	E4	R704	*G4	RB703	F1		
C139	C4	C310	*D2	C429	*E3	C550	F4	C820	H4	CL650	F3	IC502	*G4	L651	E1	R42	*A2	R185	*D3	R337	E2	R506	E4	R705	*G4	RB704	F1		
C140	*C4	C311	*D2	C430	*E3	C551	F4	C821	*F2	CL700	G4	IC503	*G4	L700	*G4	R43	*A2	R186	C3	R338	E2	R507	E4	R706	*G4	RB800	*H4		
C141	C3	C312	*D2	C431	*E3	C552	F4	C822	*G3	CL800	A1	IC504	*E4	L701	*F1	R44	*A2	R187	D3	R339	E2	R508	E4	R707	*G4	RB801	H4		
C142	C3	C313	*D2	C432	E3	C553	F4	C823	*G4	CL801	B2	IC600	F2	L800	G1	R45	*A2	R188	*D4	R340	E2	R509	E4	R708	*G4	RB802	H4		
C150	*C3	C314	D2	C433	*E3	C554	*F4	C824	*F2	CL802	G1	IC601	*E1	L801	G1	R46	*A2	R189	*C3	R341	E2	R510	E4	R709	F1	RB900	*C1		
C151	B3	C315	*D2	C434	*F3	C555	F4	C825	*G3	CL803	H2	IC602	*D1	L802	*H4	R47	*A2	R190	*C4	R342	*F2	R511	*E4	R710	F1	RB980	*G1		
C152	*B3	C316	D2	C435	*F3	C556	F4	C826	*G4	CL804	H3	IC603	D1	L900	C2	R48	*A2	R191	*C4	R343	*F2	R512	*E4	R712	*G4	RB981	*G1		

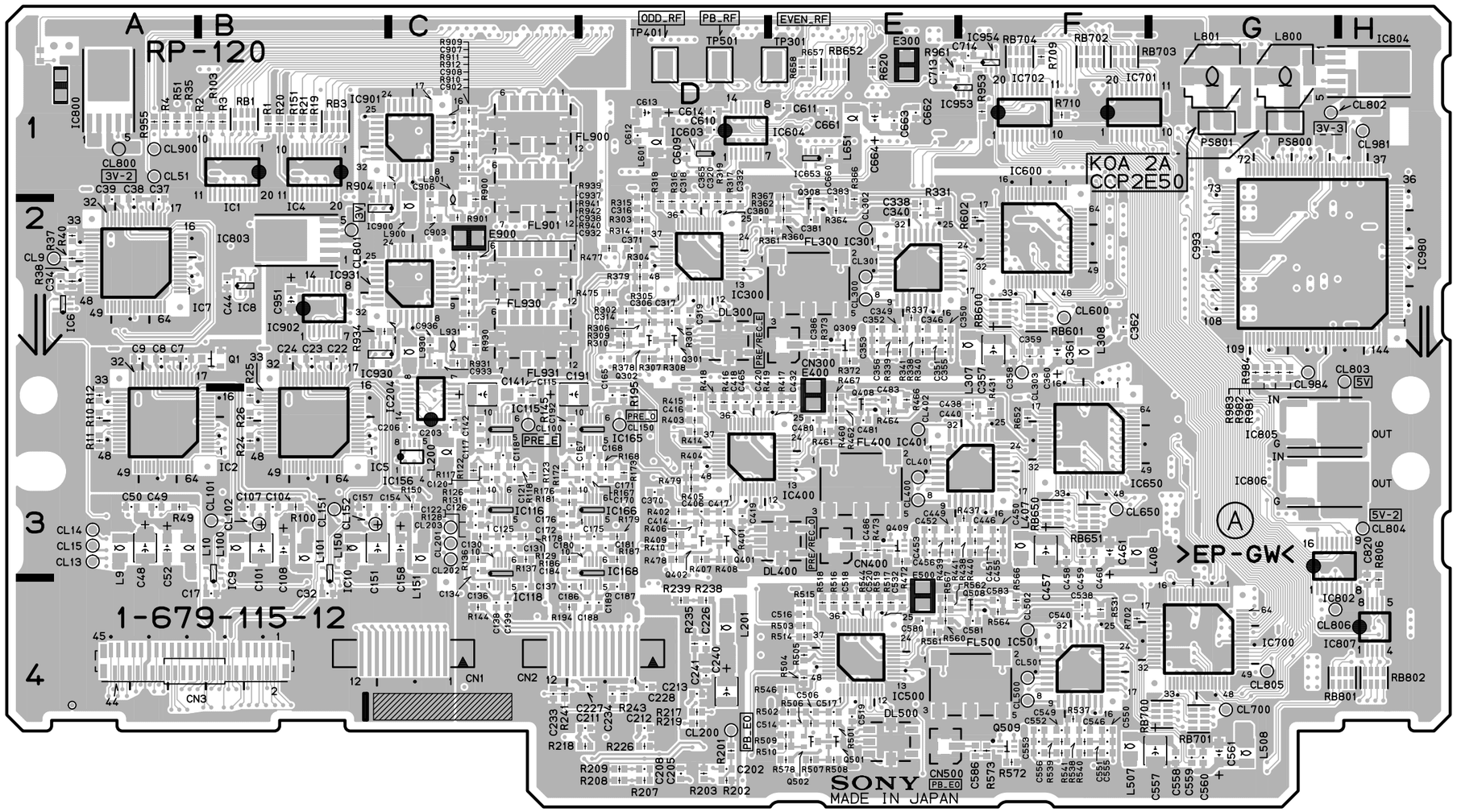

RP-120 -A SIDE-

SUFFIX: -12

FOR DSR-1800/P

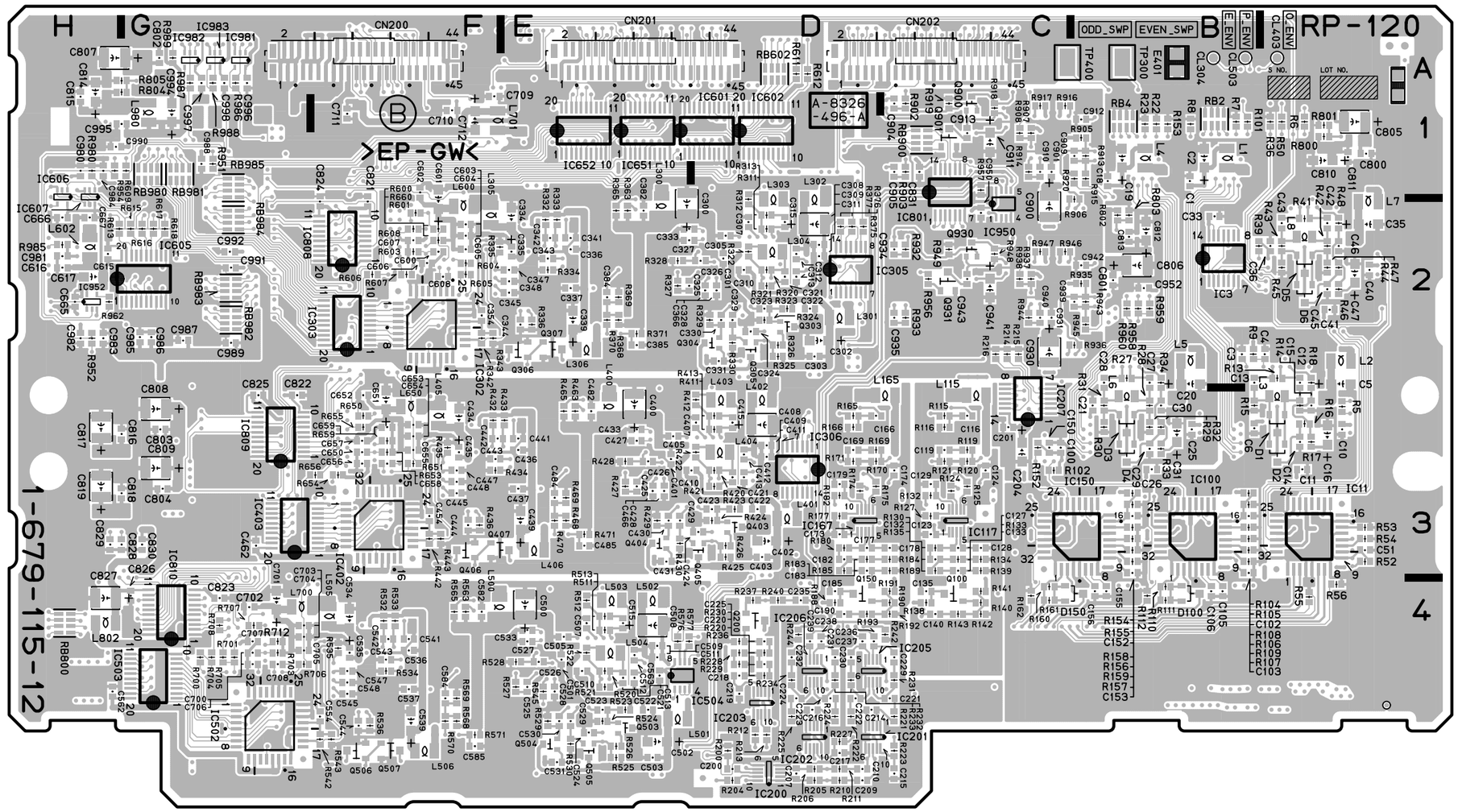

RP-120 -B SIDE-
SUFFIX: -12
FOR DSR-1800/P

SDI-61/61A (1-679-106-12)

C101	C2	C402	*A1
C102	C2	C403	*B1
C103	C1	C404	A1
C104	C2	C405	*A1
C105	*C2	C406	*B2
C106	*C1	C407	*A1
C107	*B2	C408	*B1
C108	*B2	C409	*A2
C109	C1		
C110	C1	CL401	*A1
C111	C1	CL407	*A1
C112	C1	CL408	*A1
C113	C1	CL409	*A1
C114	C1	CL410	*A1
C115	C1	CL416	C2
C116	C1		
C117	B1	CN2	*B2
C118	*C1	CN201	B4
C119	*B1		
C120	*B1	D101	*A2
C121	C1	D102	C1
C122	*C1	D103	C1
C123	C1	D201	A3
C125	*C1	D202	A2
C126	C1	D301	B3
C127	*C1	D401	A2
C201	A3		
C202	A3	E201	B3
C203	B3	E301	B3
C204	*B3	E401	A2
C205	*B3		
C206	*A3	FB201	*B3
C207	*B3	FB202	*B3
C208	A3	FB203	A2
C209	*B3	FB301	*C3
C210	*B3	FB302	*B3
C211	*A3	FB303	*C4
C212	A2	FB304	*C4
C213	B3		
C216	*B3	IC101	C2
C217	*B3	IC102	C2
C218	B3	IC103	*C1
C219	*B3	IC104	B1
C220	A3	IC105	*C1
C221	*A3	IC106	*C1
C223	A4	IC107	*C1
C225	A2	IC201	A3
C226	*A3	IC202	*A3
C227	*A3	IC203	*A3
C228	*B3	IC204	*B3
C229	*B3	IC205	*B1
C230	A2	IC301	*C2
C231	A3	IC302	C3
C232	A2	IC303	*C2
C233	A3	IC401	*B1
C234	B2	IC402	A2
C235	*B3	IC403	*A2
C236	*B1	IC404	*A1
C301	*C2	IC405	*A2
C302	*C3	IC406	*B1
C303	C2		
C304	*C3	L101	C2
C305	C2	L102	*C1
C307	C2	L103	*B1
C308	B3	L201	*A4
C309	*C3	L202	*A3
C310	*C3	L203	A2
C312	C2	L301	C2
C313	*C3	L401	*A1
C315	*C3		
C316	*C3	Q201	A4
C317	*C3	Q202	A4
C319	C3	Q203	A2
C320	B3	Q301	*C3
C321	*B3	Q302	*B3
C322	*C3	Q303	*B3
C323	*C3	Q304	C3
C324	*B3	Q305	C3
C325	B3	Q306	B3
C326	*B3	Q401	A2
C327	*C3		
C328	*B3	R101	C2
C329	C2	R102	C2
C330	*C3	R103	*B2
C331	C3	R104	*C2
C332	*C4	R105	*A2
C333	C4	R106	*C1
C334	B3	R107	*B2
C335	*C4	R108	C1
C336	B3	R109	C1
C337	C4	R110	*C1
C401	*B1	R111	C1

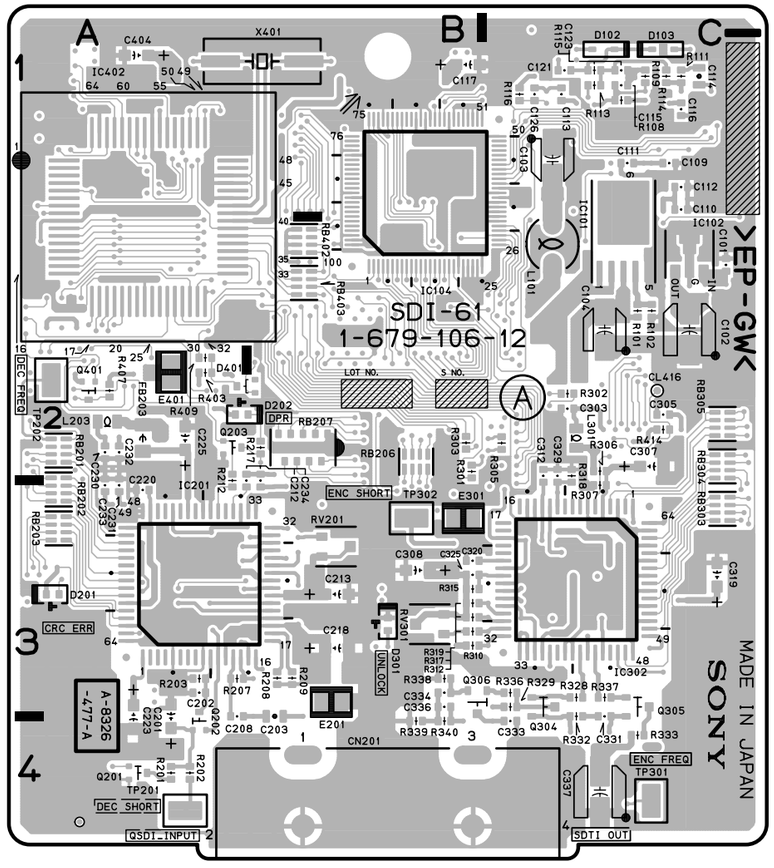

SDI-61/61A -A SIDE-

SUFFIX: -12

SDI-61: FOR DSBK-1802
SDI-61A: FOR DSBK-1602

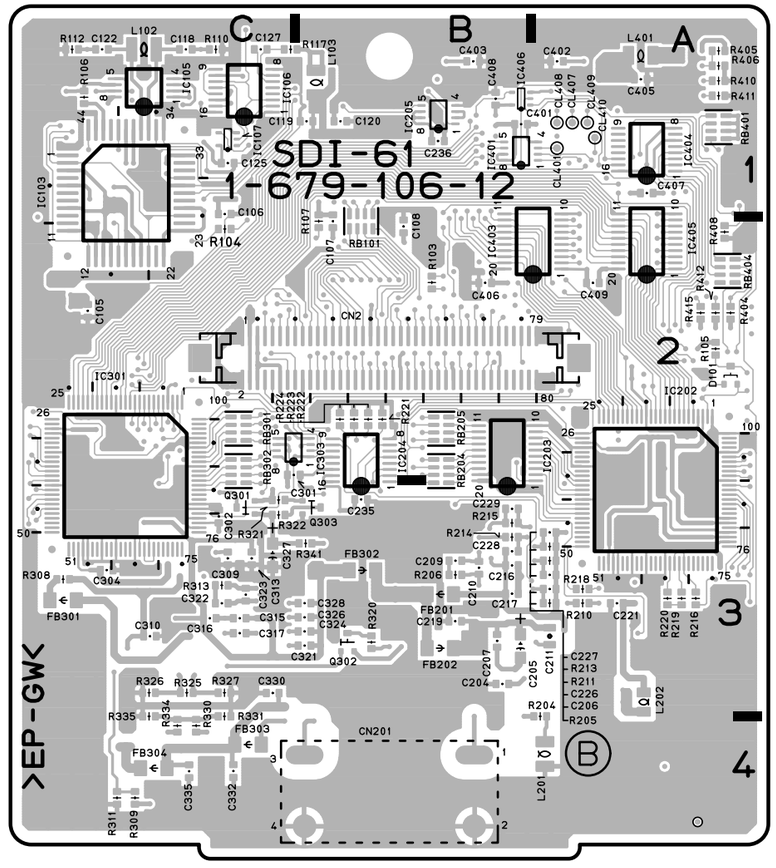

SDI-61/61A -B SIDE-

SUFFIX: -12

SDI-61: FOR DSBK-1802
SDI-61A: FOR DSBK-1602

R112	*C1	RB401	*A1
R113	C1	RB402	B2
R114	C1	RB403	B2
R115	C1	RB404	*A2
R116	C1		
R117	*C1	RV201	B3
R201	A4	RV301	B3
R202	A4		
R203	A3	TP201	A4
R204	*A3	TP202	A2
R205	*A3	TP301	C4
R206	*B3	TP302	B3
R207	A3		
R208	B3	X401	B1
R209	B3		
R210	*A3	*:B SIDE	
R211	*A3		
R212	A2		
R213	*A3		
R214	*B3		
R215	*B3		
R216	*A3		
R217	B2		
R218	*A3		
R219	*A3		
R220	*A3		
R221	*B2		
R222	*B2		
R223	*B2		
R224	*B2		
R301	B2		
R302	C2		
R303	B2		
R305	C2		
R306	C2		
R307	C3		
R308	*C3		
R309	*C4		
R310	B3		
R311	*C4		
R312	B3		
R313	*C3		
R315	B3		
R317	B3		
R318	C2		
R319	B3		
R320	*B3		
R321	*C3		
R322	*C3		
R325	*C3		
R326	*C3		
R327	*C3		
R328	C3		
R329	C3		
R330	*C4		
R331	*C3		
R332	C3		
R333	C4		
R334	*C4		
R335	*C3		
R336	C3		
R337	C3		
R338	B3		
R339	B4		
R340	B4		
R341	*B3		
R403	A2		
R404	*A2		
R405	*A1		
R406	*A1		
R407	A2		
R408	*A2		
R409	A2		
R410	*A1		
R411	*A1		
R412	*A2		
R414	C2		
R415	*A2		
RB101	*B2		
RB201	A2		
RB202	A3		
RB203	A3		
RB204	*B2		
RB205	*B2		
RB206	B2		
RB207	B2		
RB301	*C2		
RB302	*C2		
RB303	C3		
RB304	C2		
RB305	C2		

SDI-62/62A (1-679-107-12)

C101	A4	C413	*C5	CL302	C2	IC216	E3
C102	A5	C414	C5	CL601	C1	IC217	*E4
C103	A5	C416	*C4	CL602	C1	IC301	D2
C104	A5	C417	B4	CL603	C1	IC302	D2
C105	A5	C418	*B4	CL604	C1	IC303	*C2
C106	*A5	C419	B4	CL605	C1	IC304	C3
C107	*A5	C420	B4	CL606	C1	IC305	C2
C108	*A5	C421	B4	CL607	D2	IC306	*C2
C109	*A5	C422	*B4	CL608	D2	IC307	*A2
C110	B5	C423	B4	CL609	C2	IC308	A2
C111	A5	C424	*C4	CL610	C2	IC309	C2
C112	A4	C425	B4	CL611	C2	IC310	*A2
C113	*B5	C426	*C4	CL612	C2	IC311	*B2
C114	*A4	C427	C5	CL613	C2	IC312	C3
C117	*A5	C428	C5	CL614	C2	IC401	C4
C118	*B5	C429	B5	CL701	F2	IC402	C4
C119	*A5	C430	C5	CL702	F2	IC403	C4
C120	*A5	C431	C5	CL703	F1	IC501	E5
C121	*A4	C432	C5	CL704	F1	IC502	E5
C122	*B4	C433	C5	CL708	E1	IC503	F5
C125	*B4	C434	C5	CL709	E1	IC602	D1
C127	*B4	C435	C5	CL710	E1	IC603	C1
C128	*A5	C436	D5	CL711	F2	IC604	*C1
C129	B5	C437	B5	CL712	F2	IC605	*C1
C130	*A5	C438	C5	CL713	F2	IC606	C2
C131	B5	C501	F5			IC607	C1
C132	B5	C502	F5	CN3	*D3	IC608	B1
C133	B5	C503	E5	CN101	A5	IC609	C2
C134	*B5	C504	D5	CN102	C5	IC610	B1
C135	B4	C505	E5	CN103	E5	IC611	B1
C136	B5	C506	D5			IC612	B1
C137	B5	C507	F5	D1	F2	IC613	C1
C138	A4	C508	F5	D101	A3	IC614	B1
C139	A4	C509	F5	D102	A3	IC615	B1
C140	A4	C510	F5	D103	A3	IC701	F1
C141	B3	C511	E5	D104	A3	IC702	E1
C142	A3	C512	D5	D105	A4	IC703	E1
C143	A3	C513	F5	D106	A4	IC704	E2
C144	A3	C514	F5	D201	D4	IC705	D1
C201	*F3	C515	F5	D202	E4	IC706	E2
C202	*F3	C516	F5	D203	E4	IC707	F2
C203	E3	C517	F5	D204	E3	IC708	D1
C204	F2	C518	F5	D205	*E4	IC709	F2
C205	*F4	C519	*E5	D301	*A3	IC710	D1
C206	D3	C520	E5	D401	B5	IC711	F2
C208	*F3	C522	*F5	D501	E5	IC712	F2
C209	F4	C523	E5	D502	D5	IC713	F2
C210	F4	C524	*E5				
C211	*F4	C525	E5	E101	A4	L101	A5
C212	*F4	C602	D1	E102	A3	L102	*B4
C214	*E3	C603	C1	E201	F4	L201	F4
C215	*E3	C604	D1	E401	D4	L301	D2
C216	*E3	C605	D1	E701	F1	L302	E2
C217	*E3	C606	C2			L501	E5
C218	*F4	C607	*C1	FB101	*A4	L502	D5
C219	*E4	C608	*C2	FB102	*A5	L503	E5
C220	*D3	C609	C1	FB103	*A4	L504	D5
C221	D3	C610	B1	FB104	B4	L505	F5
C301	*D2	C611	*C2	FB105	B5	L506	F5
C302	D2	C612	A1	FB106	B5	L601	A1
C303	D2	C613	B1	FB107	B4	L602	B1
C304	E2	C614	B1	FB401	*C4	L701	E1
C305	*D2	C615	C1	FB402	B4		
C306	D2	C616	B1	FB403	B5	Q101	A4
C307	*D2	C617	B1	FB404	C5	Q102	A5
C308	*C2	C618	*B1	FB405	D5	Q103	B5
C309	C3	C619	*C1			Q104	B5
C310	C2	C620	A1	FL500	D5	Q105	B5
C311	*C2	C621	B1	FL501	E5	Q201	D4
C312	*B3	C622	A1	FL502	F5	Q202	*E4
C313	*B2	C623	B1	FL503	F5	Q301	*A3
C314	A2	C701	*E4			Q302	*A3
C315	A3	C702	E1	IC101	A5	Q401	*C4
C316	B2	C703	F1	IC102	A4	Q402	*C4
C317	A1	C704	F1	IC103	A4	Q403	*C4
C318	B2	C705	E1	IC104	A3	Q404	C5
C319	*B3	C706	E1	IC105	*A3	Q405	C5
C320	*C2	C707	E2	IC201	*F3	Q406	C5
C321	*C2	C708	E2	IC202	D4	Q407	C5
C322	C3	C709	D1	IC203	E4	Q701	*C1
C323	B4	C710	D1	IC204	*F4	Q702	*C1
C324	C4	C711	E2	IC205	D3		
C326	C3	C712	F2	IC206	F3	R102	A4
C401	C4	C713	F2	IC207	F4	R103	A4
C402	C4	C714	F2	IC208	*F4	R104	A5
C404	*C4	C715	D1	IC209	F4	R105	A5
C405	B4	C716	F2	IC210	D3	R107	A5
C406	C4	C717	F2	IC211	D3	R108	A5
C407	C5			IC212	E3	R109	A5
C409	C4	CL201	D4	IC213	*F3	R110	*A5
C410	B4	CL202	D3	IC214	E3	R111	A5
C412	B4	CL301	D2	IC215	E3	R112	A5

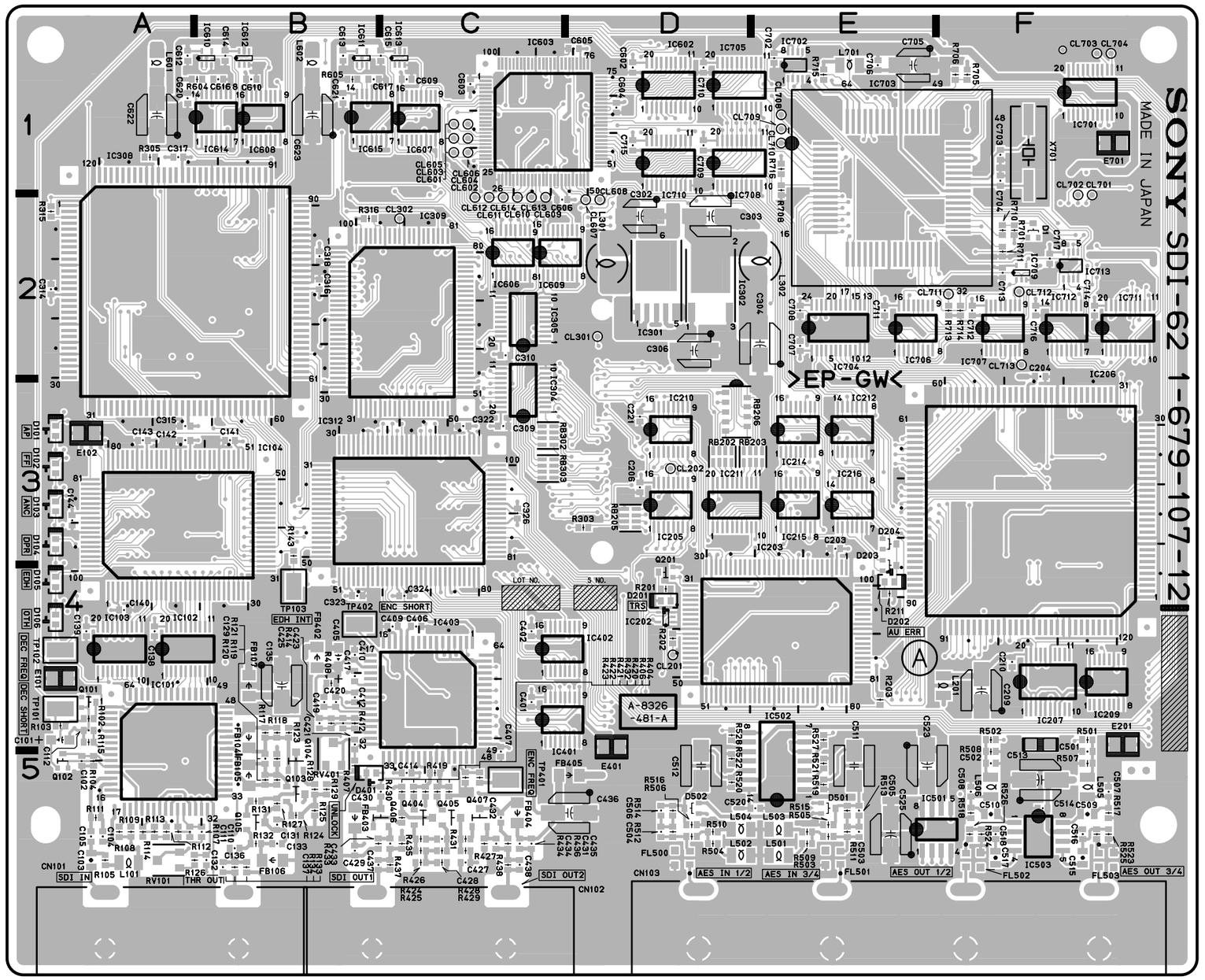

SDI-62/62A -A SIDE-

SUFFIX: -12

SDI-62: FOR DSBK-1801
SDI-62A: FOR DSBK-1601

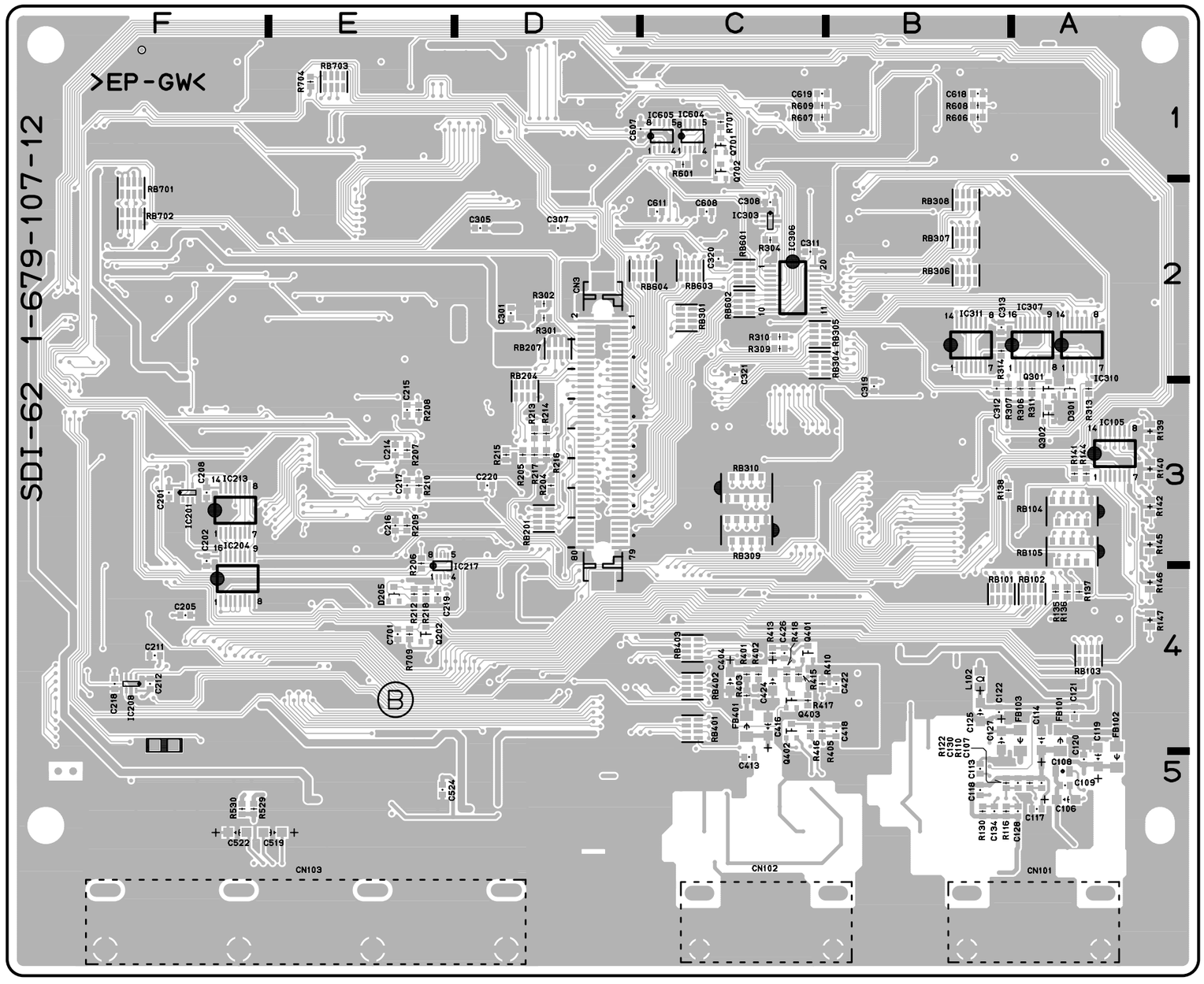

SDI-62/62A -B SIDE-

SUFFIX: -12

SDI-62: FOR DSBK-1801
SDI-62A: FOR DSBK-1601

R113	A5	R428	C5	RB702	*F2
R114	A5	R429	C5	RB703	*E1
R115	A4	R430	C5		
R116	*B5	R431	C5	RV101	A5
R117	B4	R432	C5	RV401	B5
R118	B4	R433	B5		
R119	B5	R434	C5	TP101	A4
R120	B5	R435	C5	TP102	A4
R121	B5	R436	C5	TP103	B4
R122	*B5	R437	C5	TP401	C5
R123	B4	R438	C5	TP402	B4
R124	B5	R501	F4		
R125	B5	R502	F4	X701	F1
R126	B5	R503	E5		
R127	B5	R504	D5	*:B SIDE	
R128	B5	R505	E5		
R129	B5	R506	D5		
R130	*B5	R507	F5		
R131	B5	R508	F5		
R132	B5	R509	E5		
R133	B5	R510	D5		
R134	B5	R511	E5		
R135	*A4	R512	D5		
R136	*A4	R513	E5		
R137	*A4	R514	D5		
R138	*B3	R515	E5		
R139	*A3	R516	D5		
R140	*A3	R517	F5		
R141	*A3	R518	F5		
R142	*A3	R519	E5		
R143	B3	R520	D5		
R144	*A3	R521	E5		
R145	*A3	R522	D5		
R146	*A4	R523	F5		
R147	*A4	R524	F5		
R201	D4	R525	F5		
R202	D4	R526	F5		
R203	E4	R527	E4		
R204	*D3	R528	D4		
R205	*D3	R529	*F5		
R206	*E3	R530	*F5		
R207	*E3	R601	*C1		
R208	*E3	R604	B1		
R209	*E3	R605	B1		
R210	*E3	R606	*B1		
R211	E4	R607	*C1		
R212	*E4	R608	*B1		
R213	*D3	R609	*C1		
R214	*D3	R701	F2		
R215	*D3	R704	*E1		
R216	*D3	R705	F1		
R217	*D3	R706	F1		
R218	*E4	R707	*C1		
R301	*D2	R708	E1		
R302	*D2	R709	*E4		
R303	D3	R710	F2		
R304	*C2	R711	F2		
R305	A1	R713	F2		
R306	*A3	R714	F2		
R307	*B3	R715	E1		
R309	*C2	R716	E1		
R310	*C2				
R311	*A3	RB101	*B4		
R313	*A3	RB102	*A4		
R314	*B2	RB103	*A4		
R315	A2	RB104	*A3		
R316	B2	RB105	*A3		
R401	*C4	RB201	*D3		
R402	*C4	RB202	D3		
R403	*C4	RB203	E3		
R404	C5	RB204	*D3		
R405	*C4	RB205	D3		
R406	C5	RB206	D3		
R407	B5	RB207	*D2		
R408	B4	RB301	*C2		
R410	*C4	RB302	C3		
R412	B4	RB303	C3		
R413	*C4	RB304	*C2		
R414	B4	RB305	*C2		
R415	*C4	RB306	*B2		
R416	*C4	RB307	*B2		
R417	*C4	RB308	*B2		
R418	*C4	RB309	*C3		
R419	C5	RB310	*C3		
R420	C5	RB401	*C4		
R421	C5	RB402	*C4		
R422	C5	RB403	*C4		
R423	C5	RB601	*C2		
R424	C5	RB602	*C2		
R425	C5	RB603	*C2		
R426	C5	RB604	*C2		
R427	C5	RB701	*F2		

SE-521, SE-522, SE-525, SE-538

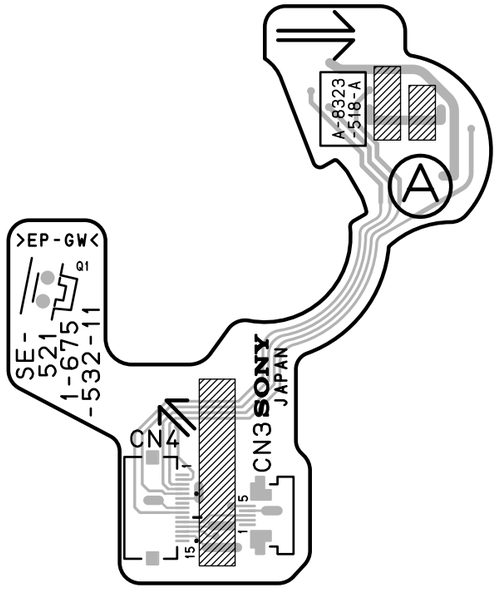

SE-521 -A SIDE-
SUFFIX: -11

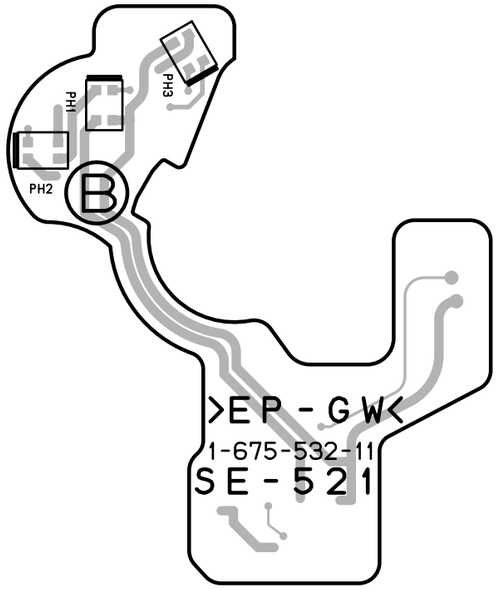

SE-521 -B SIDE-
SUFFIX: -11

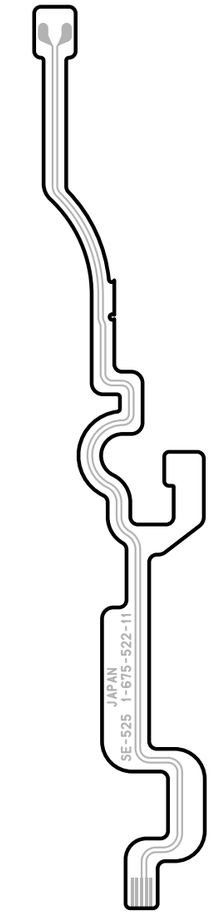

SE-525 -A SIDE-
SUFFIX: -11

SE-538 -A SIDE-
SUFFIX: -11

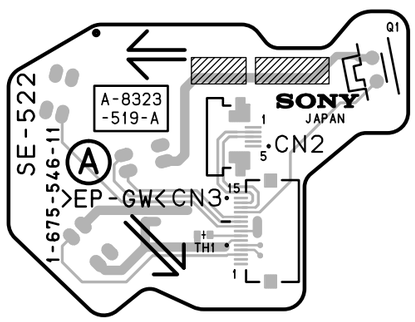

SE-522 -A SIDE-
SUFFIX: -11

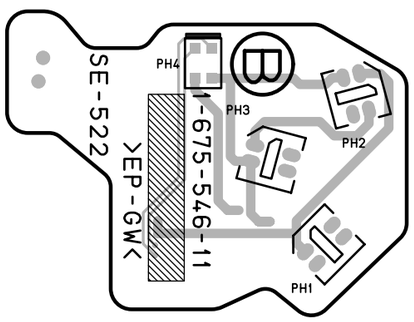

SE-522 -B SIDE-
SUFFIX: -11

14-34

http://getMANUAL.com

SSP-23 (1-679-103-11)

C3	G3	C417	*G3	C1120	*A5	C1632	D5	CL504	H5	E500	H6	IC1458	D2	R220	G3	R378	*F2	R604	H4	R1073	A3	R1406	B3	R1652	E6	RB523	H6
C8	F3	C418	*G3	C1121	*A5	C1633	D5	CL505	H5	E901	A6	IC1459	*D2	R221	G3	R379	F2	R605	H3	R1074	A4	R1407	B3	R1653	E6	RB528	G5
C11	G3	C419	*G3	C1122	A5	C1634	*D6	CL506	H5	E902	E6	IC1551	*C4	R222	G3	R381	*F2	R612	E3	R1075	A5	R1408	B3	R1654	E6	RB529	G5
C200	G2	C420	*H3	C1123	A5	C1635	*D6	CL507	F5	E903	F6	IC1553	*B4	R223	H2	R382	*F2	R614	*E3	R1076	A4	R1409	C3	R1655	E6	RB530	G5
C201	G2	C421	*G3	C1124	*A6	C1636	*D6	CL508	F5	E1751	C6	IC1555	C4	R224	H2	R383	*E2	R615	*E3	R1077	A4	R1410	*C3	R1656	E6	RB531	G5
C202	G2	C422	*G3	C1155	*D3	C1637	*D6	CL509	F6			IC1604	D6	R227	*G1	R384	E2	R616	E3	R1101	B5	R1411	*C3	R1659	E6	RB532	G5
C203	H2	C423	*H3	C1156	*D2	C1638	D6	CL510	F5	IC1	G3	IC1607	E6	R228	*H1	R385	F2	R617	*E3	R1102	B6	R1451	*A6	R1661	E6	RB533	H5
C204	G2	C424	*H4	C1157	*D2	C1639	D6	CL511	H6	IC200	G2	IC1610	D6	R229	G1	R386	*E2	R619	*E3	R1103	B6	R1452	*B6	R1662	E6	RB534	H5
C205	G2	C425	*G4	C1158	*D2	C1640	D5	CL512	H5	IC201	*H1	IC1611	D6	R231	G2	R387	*E2	R620	E3	R1104	B6	R1453	*B6	R1663	E6	RB535	H5
C206	G2	C426	*G4	C1159	*D3	C1641	D5	CL600	H5	IC202	G2	IC1617	C5	R232	H2	R388	F2	R621	*E3	R1105	*B6	R1454	*B6	R1664	E6	RB600	H2
C207	G2	C427	*H4	C1160	E3	C1652	*E6	CL601	H5	IC203	*H1	IC1621	D5	R233	*G1	R389	F2	R622	*E3	R1106	B5	R1455	B6	R1665	E6	RB601	H2
C208	G2	C428	*H4	C1161	D1	C1653	*E6	CL603	H5	IC204	*H1	IC1622	D6	R234	*G1	R390	F2	R623	*E3	R1107	B5	R1456	A6	R1666	E6	RB602	H3
C209	G2	C429	*H4	C1251	*A2	C1654	*E6	CL604	H5	IC205	*H1	IC1623	D6	R235	*G1	R391	*F2	R626	*E3	R1108	B6	R1457	B6	R1667	E6	RB603	*H4
C210	*G1	C430	*G4	C1252	*A3	C1655	E5	CL901	B1	IC206	*H1	IC1624	D6	R236	G1	R392	*F2	R627	*E3	R1109	*B5	R1459	B6	R1668	E6		
C211	H2	C431	*H4	C1253	A3	C1656	*E6	CL902	B1	IC207	*H2	IC1651	E6	R237	G1	R393	*F2	R628	E3	R1110	B6	R1460	A6	R1669	E6	S400	D1
C212	*G6	C432	G4	C1254	A2	C1657	*E5	CL904	B5	IC208	*H2	IC1653	E5	R300	*E1	R394	*F2	R908	D1	R1111	*A5	R1461	B6	R1670	E6	S500	H1
C213	H1	C433	*H4	C1255	*A2	C1658	*E6	CL905	B5	IC209	*H1	IC1654	E6	R301	F2	R395	*F2	R909	E1	R1112	*A6	R1462	A6	R1671	E6		
C214	*G2	C434	*H4	C1256	A2	C1659	*E6	CL906	B5	IC211	*G2	IC1752	C6	R302	F2	R396	*F2	R910	E1	R1113	*A5	R1463	B6	R1672	E6	TP202	G1
C215	*G2	C435	*G5	C1257	*A2	C1660	*E6	CL907	C4	IC212	G1	IC1757	C6	R303	*E2	R397	F2	R911	E1	R1114	*A5	R1468	*B2	R1673	E6	TP203	F1
C217	H1	C436	*G4	C1258	*A2	C1661	*E6	CL908	C5	IC213	H2	IC1758	B6	R304	*E2	R398	*F2	R912	D1	R1115	*A5	R1469	*B2	R1674	E6	TP400	H3
C218	H2	C437	*G4	C1351	B3	C1662	*E6	CL909	C4	IC214	*G2	IC1763	C5	R305	F2	R399	F2	R913	D1	R1179	D4	R1470	*B2	R1675	E6	TP401	H3
C219	H1	C438	*G4	C1352	*B3	C1663	*E6	CL910	C5	IC215	*H2	IC1764	B5	R306	F2	R400	*F2	R914	D1	R1180	D4	R1471	*B2	R1676	E6	TP402	H3
C220	H2	C439	*G4	C1353	B3	C1757	C6	CL911	F4	IC301	E2			R307	F2	R401	F2	R915	D1	R1181	D4	R1472	*C2	R1677	E6	TP403	H3
C221	H2	C442	G3	C1373	C3	C1758	C6	CL912	G4	IC302	E2	L400	*G3	R308	E2	R402	F2	R916	D1	R1182	D4	R1473	*C2	R1678	E6	TP404	H3
C222	H2	C443	G3	C1374	C3	C1761	C6	CL913	F4	IC303	E2	L401	H3	R309	*E2	R403	*F2	R917	D1	R1183	D4	R1474	*C2	R1679	E6	TP405	H4
C223	H2	C500	F5	C1375	C3	C1763	C6	CL914	G4	IC304	E2	L1071	*A3	R310	*E2	R404	*F2	R918	D1	R1184	D4	R1475	*C2	R1680	E6	TP406	H4
C224	H1	C501	F6	C1376	C3	C1765	*B6	CL918	F3	IC305	E1	L1072	A5	R311	*E2	R405	*F2	R919	D1	R1185	D4	R1476	*B2	R1681	E6	TP407	H3
C225	G1	C502	H6	C1377	B3	C1767	*B6	CL1071	A4	IC306	*E2	L1101	A5	R312	*E2	R406	*F2	R920	D1	R1186	D4	R1477	*B2	R1682	E6	TP408	H3
C226	H2	C503	*H5	C1378	*B3	C1769	*B6	CL1072	A4	IC307	*F2	L1102	A5	R313	E2	R407	*F2	R921	D1	R1187	D4	R1478	*C2	R1683	*E6	TP409	G3
C300	F2	C504	*H5	C1379	C3	C1771	C6	CL1073	A4	IC308	F2	L1152	*D2	R314	*E2	R408	*F2	R922	D1	R1188	D4	R1479	*C2	R1684	*E6	TP410	G3
C301	F2	C505	*H5	C1380	C3	C1773	C6	CL1074	A5	IC309	F2	L1153	E4	R315	*E2	R409	*F2	R923	D1	R1189	D4	R1480	*C1	R1685	E6	TP411	H3
C302	*E2	C506	H5	C1381	C3	C1775	B6	CL1101	A6	IC310	E2	L1251	*A2	R316	*E2	R410	F2	R924	D1	R1190	D4	R1564	*C4	R1686	E6	TP412	F3
C303	*E2	C507	H5	C1382	C3	C1777	*B6	CL1102	A6	IC311	F2	L1355	C3	R317	F2	R411	F2	R925	D1	R1191	D4	R1565	*C4	R1687	E6	TP501	H1
C304	*E2	C508	F5	C1383	*B3	C1779	C6	CL1103	A6	IC312	*F2	L1356	C3	R318	F2	R412	*F2	R926	D1	R1192	D4	R1566	B4	R1775	C6	TP502	H1
C305	*E2	C509	G5	C1384	*B3	C1781	C6	CL1104	A6	IC313	*F2	L1357	*B3	R319	F2	R413	*F2	R927	D1	R1193	D4	R1567	*B5	R1776	C6	TP503	H2
C306	*E2	C510	H1	C1385	*B3	C1782	C6	CL1105	A6	IC314	E2	L1451	*A6	R320	*F2	R414	*F2	R928	D1	R1194	D4	R1568	*B5	R1779	C6	TP504	H1
C307	E1	C511	H1	C1386	*B3	C1785	C6	CL1106	A6	IC400	G3	L1452	A1	R321	*F2	R415	F2	R929	D1	R1195	D3	R1569	*C5	R1781	C6		
C308	*E1	C512	G6	C1387	B3	C1790	*C6	CL1107	A6	IC401	G4	L1453	*C1	R322	F2	R416	F2	R930	E1	R1196	D3	R1570	*C4	R1786	C6	X200	G3
C309	*E2	C513	*G5	C1389	B3	C1791	C6	CL1108	A6	IC402	G4	L1454	*D2	R323	*F2	R417	F2	R931	E1	R1197	D3	R1571	*C4	R1788	C6	X400	G4
C310	*E2	C514	F6	C1451	*A6			CL1351	B3	IC405	G4	L1455	C1	R324	*F2	R418	*F2	R932	E1	R1198	D3	R1572	*C4	R1790	C6	X500	H5
C311	E2	C515	*H5	C1452	*B6	CL201	G1	CL1352	B3	IC500	F5	L1456	A1	R325	*E2	R419	*F2	R933	E1	R1199	*D2	R1573	*C5	R1792	C6	X1351	B3
C312	*F2	C516	F6	C1453	*A6	CL202	G1	CL1353	B3	IC501	H5	L1457	C1	R326	*E2	R420	F2	R934	E1	R1200	D2	R1574	*C5	R1793	C6	X1651	E6
C313	*F2	C517	F5	C1454	*A6	CL203	G2	CL1551	B4	IC503	*G6	L1551	*C4	R328	*E2	R421	F2	R935	E1	R1201	*E3	R1575	*C5	R1796	C5		
C314	*F2	C518	F5	C1455	*B6	CL300	F2	CL1552	C4	IC504	*G5	L1553	*C4	R329	*E2	R450	*G3	R936	E1	R1202	*E3	R1576	*C5	R1797	C6	*:B SIDE	
C315	*F2	C519	F6	C1456	*B6	CL301	F2	CL1553	C4	IC505	H1	L1604	D5	R330	E2	R451	*G3	R937	E1	R1203	*E3	R1577	*C5	R1798	C5		
C316	*E2	C520	G5	C1457	*A6	CL302	F2	CL1554	C5	IC506	H1	L1605	D5	R331	*E1	R452	*H3	R938	*B5	R1204	*E3	R1578	*C5	R1799	C6		
C317	*F2	C521	G5	C1458	A6	CL303	E2	CL1555	C5	IC507	F5	L1651	*E5	R332	E2	R453	G4	R948	G4	R1205	*E3	R1579	*C5	R1800	C6		
C318	*E2	C522	G5	C1459	B6	CL304	E2	CL1556	C5	IC508	F6	L1753	C6	R333	*E2	R454	G4	R949	G5	R1206	*E3	R1580	*C5	R1802	C6		
C319	*F2	C523	G5	C1460	*B6	CL305	F2	CL1557	C5	IC509	F6			R334	*E2	R455	H4	R950	G5	R1207	*E3	R1581	*C5	R1803	B6		
C320	*F2	C600	H2	C1461	*C1	CL306	F2	CL1558	B5	IC510	F5	LV1101	B6	R335	E2	R456	*G4	R951	G4	R1215	*E3	R1582	*C4	R1819	C6		
C321	*F2	C601	H4	C1462	*A1	CL307	E2	CL1559	B5	IC511	G5	LV1751	C6	R336	E2	R457	*G4	R952	G4	R1216	*E2	R1583	*B4	R1820	C6		
C322	*F2	C602	H4	C1463	*A1	CL401	H3	CL1601	D6	IC512	F6			R337	E2	R458	*G3	R953	G4	R1217	*E2	R1584	*B5	R1821	C6		
C323	F2	C603	H3	C1464	C1	CL402	H3	CL1605	E4	IC513	G5	PS1451	*C1	R338	*E2	R459	*G3	R954	G4	R1218	*E2	R1585	*B4	R1822	C6		
C324	F2	C608	*E3	C1465	A1	CL403	G3	CL1651	E6	IC514	F5	PS1452	*C1	R339	*E2	R460	*G3	R955	G4	R1251	A1	R1586	B5	R1823	C6		
C325	*E1	C609	*E3	C1466	*C1	CL404	H4	CL1652	E6	IC515	G5	PS1453	*A1	R340	E2	R461	*G3	R956	G4	R1252	*A2	R1587	C4	R1825	C6		
C326	*E1	C610	*E3	C1467	*A1	CL405	H4	CL1653	E6	IC516	F6	PS1454	*A1	R341	*E2	R462	F5	R957	G4	R1253	A2	R1588	C4	R1826	C6		
C327	*E2	C611	*E3	C1468	A1	CL406	H4	CL1654	E6	IC517	H5	PS1455	*C1	R342	*E2	R463	G3	R960	B5	R1254	A1	R1589	*B4	R1832	C6		
C328	*E2	C612	*E3	C1469	*A1	CL407	G3	CL1655	E6	IC518	G5			R343	*E2	R464	G3	R961	B4	R1255	A1	R1590	*B4	R1836	B6		
C329	*E2	C613	E3	C1470	C2	CL408	G4	CL1656	E6	IC519	*G5	Q500	H1	R344	*E2	R466	G4	R962	B5	R1256	A1	R1591	*B4	R1837	B6		
C330	*E2	C1071	A3	C1471	C1	CL409	G4	CL1657	E6	IC600	H2	Q600	E3	R345	E2	R468	*G5	R963	B5	R1257	*A2	R1592	*B4	R1838	B6		
C331	*E2	C1072	A3	C1472	C2	CL410	G4	CL1658	E6	IC601	H4	Q601	E3	R346	*E2	R469	H4	R964	B5	R1258	*A2	R1593	*B4	R1839	B6		
C332	*E2	C1073	A3	C1473	D2	CL411	G4	CL1659	E6	IC602	H4	Q602	E3	R347	*E2	R470	G4	R965	B5	R1259	A3	R1594	*B4				
C333	E2	C1074	A3	C1474	D2	CL412	G4			IC603	H4	Q603	*E3	R348	E2	R472	G4	R966	B5	R1262	A1	R1595	*B4	RB201	G2		
C334	F2	C1075	A4	C1475	D2	CL413	H3	CN1	H4	IC604	E3	Q1451	*B6	R349	E2	R473	G4	R967	B5	R1264	A1	R1596	*C4	RB202	G2		
C335	*F2	C1076	*A4	C1476	C1	CL414	H3	CN2	G1	IC1071	*A3	Q1452	B6	R350	E2	R474	*G4	R968	B5	R1351	B3	R1597	*C5	RB203	*H1		
C336	*F2	C1077	*A4	C1477	*C1	CL415	H3	CN101	B1	IC1072	A4	Q1453	A6	R351	E2	R478	G3	R969	B5	R1352	C3	R1598	*B5	RB204	*H1		
C337	*E2	C1078	*A4	C1478	C1	CL416	H4	CN102	E1	IC1101	*A6	Q1454	B6	R352	*F2	R479	G3	R970	B5	R1353	C4	R1599	*B5	RB400	*D1		
C338	*F2	C1079	*A4	C1479	*C1	CL418	G4	CN103	G6	IC1102	A6	Q1456	B6	R353	E2	R480	*G3	R971	B5	R1354	C4	R1600	*B5	RB401	F3		
C339	F2	C1080	*A4	C1480	*C1	CL420	G4	CN1001	B4	IC1103	A5	Q1457	A6	R354	E2	R481	G3	R972	B5	R1355	C4	R1601	*B5	RB407	G3		
C340	*F2	C1081	*A4	C1551	*C4	CL421	G4	CN1002	D5	IC1104	*B6	Q1458	B6	R355	E2	R482	*G3	R973	B5	R1356	C4	R1602	D6	RB500	*F5		
C341	F2	C1082	*A4	C1552	C4	CL422	G4	CN1003	F4	IC1105	B6	Q1459	A6	R356	E2	R500	*H4	R974	B5	R1357	C3	R1603	D5	RB501	*F5		
C342	*F2	C1083	*A5	C1553	C4	CL423	G4	CN1011	*D3	IC1106	A5	Q1460	B6	R357	*F2	R501	*H4	R975	B5	R1358	C3	R1604	D5	RB502	F5		
C343	F2	C1084	*A5	C1554	C4	CL424	G4	CN1012	*C3	IC1155	*D3			R358	F2	R502	*H4	R976	D4	R1359	C3	R1605	D6	RB503	*H6		
C344	F2	C1101	A5	C1557	*C4	CL425	H4	CN1451	B6	IC1156	E2	R200	G1	R359	F2	R503	F5	R977	D5	R1360	B3	R1607	E4	RB504	*H5		
C345	*E2	C1102	*A5	C1558	*B4	CL426	G4	CN1452	A6	IC1157	*D3	R201	G1	R360	*F2	R504	*H5	R978	D4	R1361	B3	R1608	E4	RB505	H6		
C346	E2	C1103	A6	C1561	C3	CL427	G4	CN1453	A6	IC1158	D2	R203	*H1	R361	*F2	R505	H5	R979	D5	R1375	C3	R1609	D4	RB506	H6		
C347	*E2	C1104	*B5	C1562	*C4	CL428	G4	CN1454	B2	IC1159	D2	R204	G2	R362	*F2	R507	*G5	R1004	F3	R1376	C3	R1610	D4	RB507	H6		
C400	*G3	C1105	*A5	C1571	*C4	CL429	G4	CN1455	C2	IC1251	A2	R205	G2	R363	F2	R509	H1	R1005	G3	R1377	C3	R1611	E4	RB508	H6		
C401	G3	C1106	*A5	C1572	*C4	CL430	F3			IC1252	*A3	R206	*H1	R364	F2	R510	H1	R1006	F3	R1378	C3	R1612	E4	RB509	H5		
C402	G3	C1107	B6	C1573	*C4	CL431	F3	D200	G2	IC1351	B3	R207	G2	R365	F2	R511	H1	R1007	G3	R1385	C3	R1615	C5	RB510	G6		
C403	*G3	C1108	*A6	C1574	*B4	CL432	F3	D201	G2	IC1355	C3	R208	G2	R366	*F2	R513	H5	R1008	F3	R1386	C3	R1616	C5	RB511	G6		
C404	H3	C1109	*B6	C1575	*B4	CL433	F3	D202	G2	IC1356	C3	R209	G2	R367	F2	R514	*H5	R1009	G3	R1394	C3	R1617	C6	RB512	G6		
C405	H3	C1110	B5	C1576	*B5	CL434	H3	D300	F2	IC1357	B3	R210	G2	R368	F2	R515	H5	R1010	F3	R1395	C3	R1618	C6	RB513	G6		
C406	*H3	C1111	B5	C1577	*C5	CL435	G4	D301	E2	IC1358	B3	R211	G2	R369	*F2	R516	G5	R1011	G3	R1396	C3	R1619	D5	RB514	*G6		
C407	G4	C1112	B6	C1578	*B5	CL436	G4	D302	F2	IC1361	B3	R212	G2	R370	*F2	R517	F6	R1012	F3	R1397	B3	R1620	D5	RB515	*H6		
C408	G4	C1113	B5	C1601	D5	CL437	G4	D605	*E3	IC1451	*A6	R213	G1	R371	*F2	R518	F6	R1026	F4	R1398	B3	R1621	D6	RB516	G6		
C409	*G4	C1114	*B6	C1602	D5	CL438	G4	D1101	B6	IC1452	*A6	R214	G2	R372	*F2	R524	G6	R1027	F4	R1400	C3	R1624	D6	RB517	*G6		
C412	G4	C1115	B6	C1603	D6	CL439	G3	D1355	C3	IC1453	*A6	R215	G1	R373	*F2	R526	H6	R1028	F4	R1401	C3	R1625	*D6	RB518	G6		
C413	*G3	C1116	B6	C1604	D6	CL440	G3	D1356	C3	IC1454	*B6	R216	G2	R374	*F2	R600	*H2	R1029	F4	R1402	*B3	R1626	D6	RB519	*G5		
C414	*G3	C1117	B5	C1621	E5	CL501	H5	D1751	C6	IC1455	*B6	R217	G2	R375	*F2	R601	*H2	R1030	*F1	R1403	B3	R1632	E5	RB520	G6		
C415	*H3	C1118	B6	C1622	D5	CL502	H5			IC1456	B2	R218	*G2	R376	*F2	R602	H2	R1071	*A3	R1404	*B3	R1634	D6	RB521	G6		
C416	*H3	C1119	*B5	C1631	D4	CL503	H6	E200	G2	IC1457	*C2	R219	G3	R377	*F2	R603	H4	R1072	*A3	R1405	C3	R1651	E6	RB522	G6		

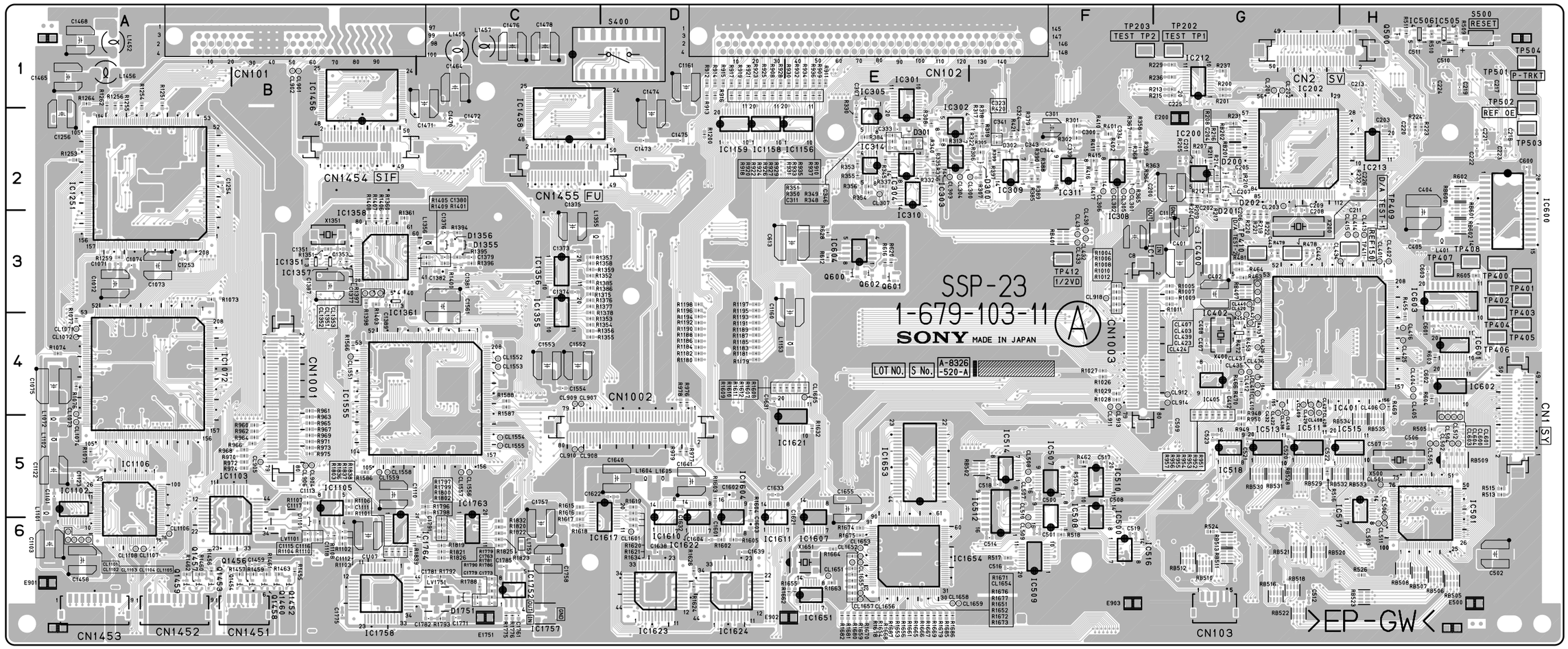

SSP-23 -A SIDE-
SUFFIX: -11
FOR DSR-1600/P

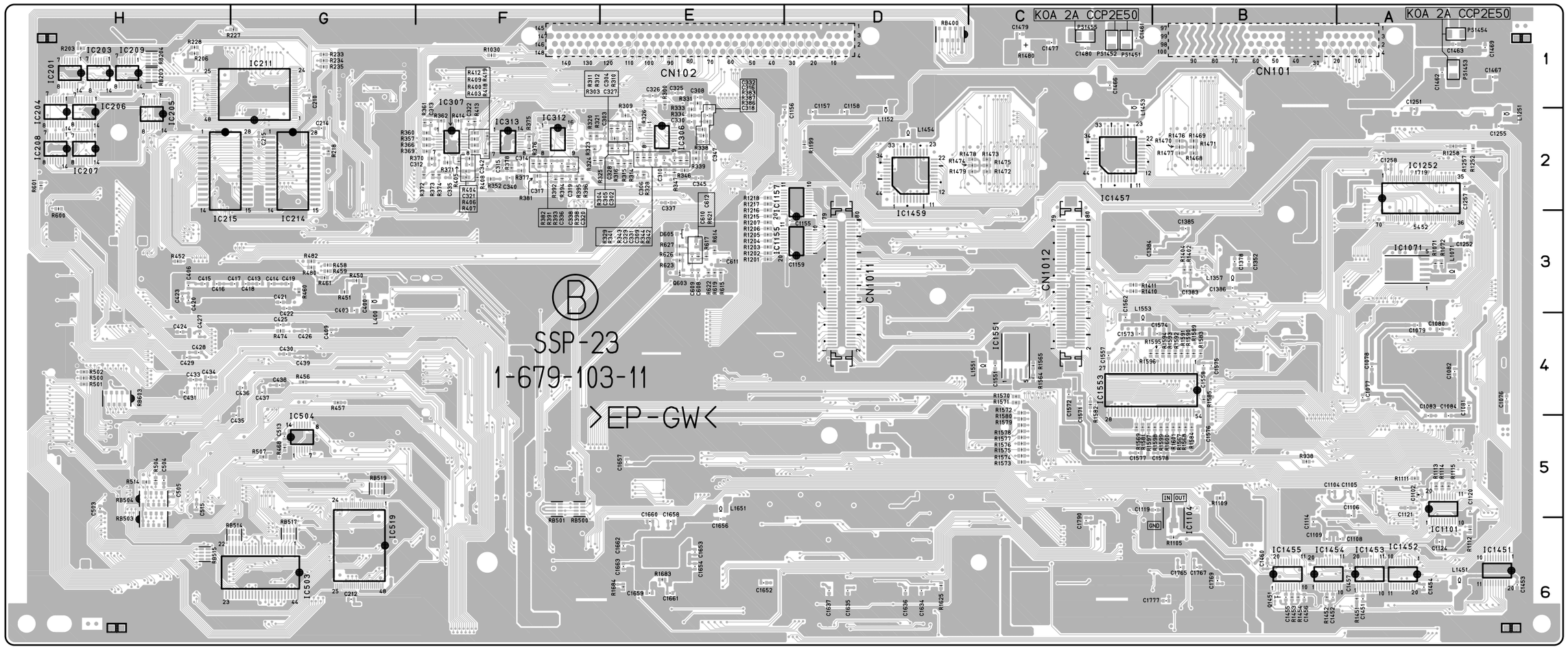

SSP-23 -B SIDE-
SUFFIX: -11
FOR DSR-1600/P

SSP-24/24A (1-679-116-12)

C101	D4	C404	H4	C1108	A5	C1457	*B3	C2305	*C2	CN1	H5	IC214	*H1	IC2253	*E5	R220	H1	R378	*F3	R600	*H3	R1219	*B5	R1466	*B3	R2301	*C2	RB529	G4
C102	*E4	C405	*H4	C1109	A5	C1458	*B3	C2306	C2	CN2	H2	IC215	*H2	IC2301	*C2	R221	H1	R379	E2	R601	H2	R1220	*B5	R1467	*B3	R2302	C3	RB530	G4
C103	E3	C406	*H3	C1151	A4	C1459	*B2	C2307	C2	CN103	G6	IC301	E2	IC2302	C3	R222	H1	R381	*E3	R602	H2	R1251	B4	R1468	B2	R2303	*C3	RB531	G4
C104	E3	C407	G3	C1152	A4	C1460	B3	C2308	*C3	CN106	B1	IC302	E2	IC2303	C4	R223	G2	R382	*E2	R603	H3	R1252	A4	R1469	B2	R2304	C3	RB532	H4
C105	*E3	C408	G3	C1153	*A4	C1461	B3	C2309	*C3	CN107	E1	IC303	E3	IC2351	F5	R224	G2	R383	*E2	R604	H4	R1253	*A4	R1470	B2	R2305	*C3	RB533	H4
C106	E4	C409	*G3	C1154	*A4	C1467	B2	C2310	*C3	CN1101	A6	IC304	E3	IC2352	F5	R227	*H2	R384	E2	R605	H3	R1254	*A4	R1471	B2	R2306	*C3	RB534	*H4
C107	E4	C410	*G4	C1155	*A3	C1501	*G5	C2311	*C3	CN1201	B6	IC305	E2	IC2353	*F5	R228	*H2	R385	E3	R606	*F1	R1255	*A4	R1501	*D2	R2307	*C3	RB535	*H4
C108	E3	C411	*G4	C1156	*A3	C1502	G5	C2312	C3	CN1301	C6	IC306	*E2	IC2402	C3	R229	G1	R386	*E2	R607	*F1	R1256	*A4	R1502	*D3	R2308	*C3	RB600	H3
C110	*E4	C412	*G3	C1157	*A3	C1504	G6	C2313	*C3	CN1401	C6	IC307	*F2	IC2403	C4	R231	H1	R387	*E2	R608	*G2	R1257	*B3	R1503	D3	R2309	*C3	RB601	H3
C111	*E3	C413	*G3	C1158	*A3	C1505	D4	C2314	C3	CN1501	H6	IC308	F3	IC2451	F5	R232	H2	R388	E3	R609	*G1	R1258	*A3	R1504	*D3	R2310	*C4	RB602	H3
C112	*E4	C414	*G3	C1159	*A2	C1506	*D2	C2315	C4	CN1504	G6	IC309	E3	IC2452	F5	R233	H1	R389	E3	R610	F1	R1259	*A3	R1505	*D3	R2311	*C4	RB603	*H4
C113	D4	C415	*H2	C1160	A3	C1507	*D2	C2351	E5	CN2151	D6	IC310	E3	IC2453	*F5	R234	H1	R390	E2	R611	*G1	R1260	*A3	R1506	*D3	R2312	*C3	RB604	*H3
C114	E3	C416	*H3	C1161	A3	C1508	*D2	C2352	F5	CN2251	E6	IC311	F3			R235	H1	R391	*E2	R612	*G1	R1261	*B3	R1507	D3	R2313	B1	RB605	*H3
C115	*E3	C417	*G2	C1162	A2	C1509	*D2	C2353	*F5	CN2351	F6	IC312	*E2	L101	D3	R236	G1	R392	*E3	R613	*G2	R1262	*A3	R1508	*D3	R2351	*E5	RB1101	A1
C200	G1	C418	*G3	C1163	A2	C1510	*D2	C2354	F5	CN2451	F6	IC313	*F2	L102	D4	R237	H1	R393	*E2	R614	*G1	R1263	*A3	R1509	*D3	R2352	*E5	RB1151	A1
C201	G1	C419	*G3	C1164	A2	C1511	D2	C2355	*F5			IC314	E2	L103	E4	R300	*E2	R394	*E3	R615	*G1	R1264	*A3	R1510	*G5	R2353	*E5	RB1152	A2
C202	G2	C420	*H3	C1165	*A2	C1512	D2	C2356	*F5	D200	H1	IC400	G2	L104	D3	R301	F2	R395	*E3	R616	G1	R1265	*A3	R1511	*G5	R2354	*E5	RB1203	B1
C203	H2	C421	*G3	C1166	*A2	C1513	D3	C2357	F5	D201	H2	IC401	G3	L400	*G3	R302	F2	R396	*E3	R617	*G1	R1266	*B3	R1514	*G6	R2355	*F5	RB1301	A1
C204	G1	C422	*G3	C1167	A2	C1514	D3	C2358	E6	D202	H1	IC402	G3	L401	*H4	R303	*E2	R397	E2	R618	*F1	R1267	*B3	R1516	G6	R2356	*E5	RB1352	B2
C205	H1	C423	*H3	C1169	*A2	C1515	*D3	C2359	F6	D300	E2	IC403	G4	L1101	A5	R304	*E2	R398	*E3	R619	*G1	R1268	A2	R1517	*D3	R2357	*F5	RB1501	B1
C206	H1	C424	*H3	C1170	*A2	C1516	*D3	C2406	C2	D301	E2	IC404	G4	L1102	A5	R305	E2	R399	E2	R620	G1	R1269	B2	R1518	D3	R2358	*F5	RB1502	D2
C207	H1	C425	*G3	C1171	*A2	C1517	*D3	C2407	C2	D302	E2	IC405	G3	L1201	B5	R306	E2	R400	*F2	R621	*G1	R1270	A2	R1520	*G5	R2359	*F5	RB2101	C2
C208	H1	C426	*G3	C1172	*A2	C1518	*D3	C2408	*C3	D600	*G1	IC406	G3	L1202	B5	R307	E3	R401	F2	R622	*G1	R1271	B2	R1521	*G5	R2360	*F5	RB2301	C2
C209	H1	C427	*H3	C1173	*A2	C1519	*D3	C2409	*C3	D601	*G2	IC500	F3	L1301	B5	R308	E2	R402	F2	R623	*G1	R1272	*D2	R1522	*D4	R2361	*F5		
C210	H1	C428	*H3	C1174	D2	C1520	*D3	C2410	*C3	D602	*G2	IC501	H5	L1302	C5	R309	*E2	R403	*F2	R624	*F2	R1301	*C5	R1523	D4	R2362	*F5	RV1151	A3
C211	H2	C429	*H3	C1175	A2	C1521	G6	C2411	*C3	D603	*F2	IC503	*H5	L1401	C5	R310	*E2	R404	*F2	R625	F2	R1302	*C5	R1601	D3	R2363	*F5	RV1251	B3
C212	H6	C430	*G3	C1176	A2	C1601	*D3	C2412	C3	D604	*F1	IC504	F4	L1402	C5	R311	*E2	R405	*F2	R626	*G1	R1305	C5	R1602	*D3	R2364	F6	RV1351	B3
C213	*H2	C431	*H4	C1201	*B5	C1602	D3	C2413	*C3	D605	*G1	IC505	*G1	L1601	D2	R312	*E2	R406	*F3	R627	*G1	R1306	C5	R1603	*D3	R2365	F6	RV1451	B3
C214	*H1	C432	*G4	C1202	B5	C1603	D2	C2414	C3	D1031	D5	IC506	G1	L1602	D3	R313	E2	R407	*F3	R628	F2	R1307	B5	R1604	*D3	R2366	*E6	RV2101	C3
C215	*H2	C433	*H4	C1204	B5	C1604	D3	C2415	C4	D1032	D5	IC507	F3	L1603	*D1	R314	*E2	R408	*F3	R629	F2	R1308	C5	R1605	*D2	R2367	*F6	RV2201	C3
C217	H2	C434	*H4	C1205	B5	C1605	D3	C2451	F5	D1033	D2	IC508	E3	L1604	C1	R315	*E2	R409	*F2	R630	*F1	R1309	C5	R1606	*D2	R2402	C3	RV2301	C3
C218	G2	C435	*G4	C1206	B5	C1606	*D2	C2452	F5	D1101	A5	IC509	F4	L1609	*D1	R316	*E2	R410	F2	R1001	A5	R1310	C5	R1607	*D2	R2403	*C3	RV2401	C3
C219	H2	C436	*G4	C1207	B5	C1607	*D3	C2453	*F5	D1102	A5	IC510	F3			R317	E2	R411	F2	R1002	B5	R1311	C5	R1608	*D3	R2404	C3		
C220	G2	C437	*G4	C1208	B5	C1608	*D3	C2454	F5	D1151	A2	IC511	G4	PS101	B1	R318	E2	R412	*F2	R1003	*D5	R1312	B5	R1609	*D3	R2405	*C3	S400	G6
C221	G2	C438	*G4	C1209	B5	C1609	*D2	C2455	*F5	D1201	B5	IC512	H6	PS102	B1	R319	E2	R413	F2	R1004	*D5	R1315	C5	R2101	*B2	R2406	*C3	S500	G1
C222	G2	C439	*G3	C1251	A4	C1610	*D3	C2456	*F5	D1202	B5	IC513	G4	PS103	B1	R320	*E2	R414	*F2	R1011	C5	R1316	B5	R2102	B3	R2407	*C3	S1101	A6
C223	G2	C441	G3	C1252	B4	C1611	*D2	C2457	F5	D1251	A2	IC514	H6	PS104	B1	R321	*E2	R415	F2	R1012	C5	R1317	C5	R2103	*B3	R2408	*C3	S1201	B6
C224	*G2	C442	*G3	C1253	*A4	C1612	*D3	C2458	F6	D1301	B5	IC515	H4	PS105	*D1	R322	E2	R416	F3	R1031	D5	R1319	*C5	R2104	B3	R2409	*C3	S1301	C6
C225	G1	C443	*G2	C1254	*A4	C1613	D2	C2459	F6	D1302	C5	IC516	F4	PS106	C1	R323	*E2	R417	F3	R1032	D5	R1320	*C5	R2105	*B3	R2410	*C4	S1401	C6
C226	H2	C500	E3	C1255	*A3	C1614	D2			D1351	B2	IC517	F4			R324	*E2	R418	*F2	R1033	D5	R1351	B4	R2106	*B3	R2411	*C4		
C300	F2	C501	E3	C1256	*A3	C1615	*D3	CL300	E3	D1401	C5	IC518	G4	Q500	G1	R325	*E2	R419	*F2	R1101	*B5	R1352	B4	R2107	*B3	R2412	*C3	TP100	E1
C301	F2	C502	H6	C1257	*A3	C1616	D1	CL301	F3	D1402	C5	IC519	*H5	Q600	G1	R326	*E2	R420	E2	R1102	*B5	R1353	*B4	R2108	*B3	R2451	*F5	TP101	E1
C302	*E2	C503	*H5	C1258	*A3	C1617	C1	CL302	F3	D1451	B2	IC600	H2	Q601	G1	R328	*E3	R421	E2	R1105	B5	R1354	*B4	R2109	*B3	R2452	*F5	TP202	H1
C303	*E2	C504	*H5	C1259	*A2	C1618	D1	CL303	E3	D1601	*D3	IC601	H3	Q602	G1	R329	*E2	R450	*G3	R1106	A5	R1355	*B4	R2110	*B4	R2453	*F5	TP203	H1
C304	*E2	C505	*H5	C1260	A3	C2101	*B2	CL304	E3	D1602	*D3	IC602	H4	Q603	*G1	R330	E2	R451	*G3	R1107	A5	R1356	*B4	R2111	*B4	R2454	*F5	TP400	H3
C305	*E2	C506	H4	C1261	B3	C2102	*B2	CL305	F3	D1603	*D2	IC603	H3	Q1001	*D5	R331	*E2	R452	*H3	R1108	B5	R1357	*B3	R2112	*B3	R2455	*F5	TP401	H3
C306	*E3	C507	H4	C1267	A2	C2103	*B2	CL306	F3	D2151	*D6	IC604	G1	Q1002	*D5	R332	E3	R453	G3	R1109	A5	R1358	*B3	R2113	B1	R2456	*F5	TP402	H3
C307	E2	C508	F3	C1301	*B5	C2104	*B2	CL307	E3	D2152	*E5	IC605	G2	Q1031	D5	R333	*E2	R454	G3	R1110	A5	R1359	*B3	R2151	*D5	R2457	*F5	TP403	H4
C308	*E2	C509	H6	C1302	C5	C2105	*B2	CL401	H2	D2251	*E6	IC606	G2	Q1032	D5	R334	*E2	R455	H3	R1111	A5	R1360	*B3	R2152	*D5	R2458	*F5	TP404	H4
C309	*E2	C510	G1	C1303	B2	C2106	C2	CL402	H2	D2252	*E5	IC1101	A5	Q1033	D5	R335	E2	R456	G4	R1112	A5	R1361	*B3	R2153	*D5	R2459	*F5	TP405	H4
C310	*E3	C511	G1	C1304	B5	C2107	B2	CL403	G3	D2351	*E6	IC1102	*A5	Q1034	D5	R336	E3	R457	G4	R1115	A5	R1362	*B3	R2154	*D5	R2460	*F5	TP406	H4
C311	E2	C512	H5	C1305	C5	C2108	*B3	CL404	H4	D2352	*F5	IC1151	A4	Q1151	D2	R337	E2	R458	*G3	R1116	A5	R1363	*B3	R2155	*D5	R2461	*F5	TP407	H4
C312	*F3	C513	F4	C1306	B5	C2109	*B3	CL405	H4	D2451	*F6	IC1152	A3	Q1501	*G6	R338	*E2	R459	*G3	R1117	B5	R1364	*B3	R2156	*D5	R2462	*F5	TP408	G3
C313	*F2	C514	*H6	C1307	C5	C2110	*B3	CL406	H4	D2452	*F5	IC1153	A3	Q1502	*D3	R339	*E2	R460	G3	R1119	*B5	R1365	*B3	R2157	*D5	R2463	*F5	TP409	G2
C314	*F3	C515	*F4	C1308	B5	C2111	*B3	CL407	G3			IC1154	*A2	Q1503	D3	R340	E2	R461	*G3	R1120	*B5	R1366	*B3	R2158	*E5	R2464	F6	TP410	G2
C315	*F3	C516	E4	C1309	C5	C2112	C3	CL408	G4	E200	G2	IC1155	A1	Q1601	*D2	R341	*E2	R462	F4	R1151	A4	R1367	*B3	R2159	*E5	R2465	F6	TP411	G2
C316	*E2	C517	F3	C1351	B4	C2113	*B3	CL409	G4	E500	H6	IC1156	A1	Q1602	D3	R342	*E2	R463	*G3	R1152	A4	R1368	B2	R2160	*E5	R2466	*F6	TP412	E1
C317	*E3	C518	H6	C1352	B4	C2114	B3	CL410	G4	E1151	A1	IC1201	B5	Q1603	*D2	R343	*E2	R464	*G3	R1153	*A4	R1369	B2	R2161	*D5	R2467	*F6	TP500	H4
C318	*E2	C519	F4	C1353	*B4	C2115	C4	CL411	G4	E1251	*A1	IC1202	*B5	Q2151	*D5	R344	*E2	R465	*G4	R1154	*A4	R1370	B2	R2162	*D5			TP501	H4
C319	*E3	C520	*G4	C1354	*B4	C2116	B2	CL412	G4	E1601	E4	IC1251	B4	Q2153	D6	R345	E2	R466	G4	R1155	*A4	R1371	B2	R2163	*E5	RB201	H1	TP502	H4
C320	*E3	C521	*G4	C1355	*B3	C2151	D5	CL413	H2	E1602	*E4	IC1252	B3	Q2154	D6	R346	*E3	R467	*G3	R1156	*A4	R1375	*B2	R2164	D6	RB202	H1	TP503	H4
C321	*F3	C522	H4	C1356	*B3	C2152	D5	CL414	H2	E2101	*D2	IC1253	A3	Q2251	*E5	R347	*E3	R468	F4	R1157	*A3	R1376	A1	R2165	D6	RB203	*H2	TP504	G1
C322	F2	C523	G4	C1357	*B3	C2153	*D5	CL415	G2	E2201	G5	IC1301	B5	Q2253	E6	R348	E2	R469	*H4	R1158	*A3	R1401	*C5	R2166	*D6	RB204	*H2		
C323	E2	C600	H2	C1358	*B3	C2154	E5	CL416	H3			IC1302	*C5	Q2254	E6	R349	E2	R470	G4	R1159	*A3	R1402	*C5	R2167	*E6	RB400	G5	X200	H1
C324	E2	C601	H3	C1359	*B2	C2155	*D5	CL418	G4	FL1501	G6	IC1303	B1	Q2351	*F5	R350	E2	R471	G4	R1160	*A3	R1405	C5	R2202	C3	RB401	G2	X400	G3
C325	*E2	C602	*H3	C1360	B3	C2156	*E5	CL419	G4	FL1502	H6	IC1351	B4	Q2353	F6	R351	E2	R472	G3	R1161	*A3	R1406	C5	R2203	*C3	RB407	G3	X500	H5
C326	*E2	C603	*H3	C1361	B3	C2157	D5	CL422	G4	FL1503	H6	IC1352	B3	Q2354	F6	R352	*F3	R473	G3	R1162	*A3	R1407	C5	R2204	C3	RB408	G3		
C327	*E2	C604	F1	C1362	B2	C2158	D6	CL425	H3	FL1504	H6	IC1353	B3	Q2451	*F5	R353	*E3	R474	*G3	R1163	*A3	R1408	C5	R2205	*C3	RB500	*H6	*:B SIDE	
C328	*E2	C605	G2	C1363	B2	C2159	E6	CL427	G4	FL1505	H6	IC1354	*B2	Q2453	F6	R354	E3	R478	*G3	R1164	*A3	R1409	C5	R2206	*C3	RB501	*H6		
C329	*E2	C606	*G2	C1364	B2	C2206	C2	CL428	G4	FL2151	D6	IC1401	C5	Q2454	F6	R355	*E3	R479	*G2	R1165	*A3	R1410	C5	R2207	*C3	RB502	*H6		
C330	*E2	C607	*G2	C1365	*B2	C2207	C2	CL429	G4	FL2152	D6	IC1402	*C5			R356	E3	R480	*G2	R1166	*A3	R1411	C5	R2208	*C3	RB503	H5		
C331	*E2	C608	*G1	C1366	*B2	C2208	*C3	CL430	G2	FL2251	E6	IC1451	B4	R102	*F4	R357	*F2	R481	*G2	R1167	*A3	R1412	C5	R2209	*C3	RB504	H5		
C332	*E2	C609	*G1	C1367	B2	C2209	*C3	CL431	G2	FL2252	E6	IC1452	B3	R104	*E3	R358	F2	R482	*G2	R1168	A2	R1415	C5	R2210	*C4	RB505	H6		
C333	E2	C610	*G1	C1369	*B2	C2210	*C3	CL432	G2	FL2351	F6	IC1453	B3	R200	H1	R359	F2	R500	H4	R1169	A2	R1416	C5	R2211	*C4	RB506	H6		
C334	F2	C611	*G1	C1370	*B2	C2211	*C3	CL433	G2	FL2352	F6	IC1501	D3	R201	H1	R360	*F2	R501	H4	R1170	A2	R1417	C5	R2212	*C3	RB507	H6		
C335	*F3	C612	*G1	C1371	*B2	C2212	C3	CL501	H5	FL2451	F6	IC1502	G5	R203	H2	R361	*F2	R502	H4	R1171	A2	R1419	*C5	R2251	*E5	RB508	H6		
C336	*E2	C613	G2	C1372	*B2	C2213	*C3	CL502	H4	FL2452	F6	IC1503	D4	R204	G1	R362	*F2	R503	F3	R1175	*A2	R1420	*C5	R2252	*E5	RB509	H5		
C337	*E3	C614	G2	C1373	*B2	C2214	C3	CL503	H5			IC1505	*D2	R205	G1	R363	F2	R504	H4	R1176	A1	R1451	B4	R2253	*E5	RB510	H6		
C338	*E2	C615	F1	C1401	*C5	C2215	C4	CL504	H4	IC101	*E3	IC1601	D3	R206	*H2	R364	F3	R505	H4	R1177	D2	R1452	B4	R2254	*E5	RB511	H6		
C339	F2	C1001	*D5	C1402	C5	C2251	E5	CL505	H4	IC200	G1	IC1602	*D3	R207	G1	R365	F3	R506	H4	R1201	*B5	R1453	*B4	R2255	*E5	RB512	H6		
C340	*F3	C1002	*D5	C1404	C5	C2252	E5	CL506	H5	IC201	*H2	IC1603	*D2	R208	G1	R366	*F2	R507	F4	R1202	*B5	R1454	*B4	R2256	*E5	RB513	H6		
C341	E2	C1003	D5	C1405	C5	C2253	*E5	CL600	H4	IC202	H1	IC2101	*C2	R209	G1	R367	F2	R509	*G1	R1205	B5	R1455	*B4	R2257	*E5	RB514	*H5		
C342	*F3	C1004	D5	C1406	C5	C2254	E5	CL602	H4	IC203	*G2	IC2102	B3	R210	H1	R368	F2	R510	G1	R1206	B5	R1456	*B4	R2258	*E5	RB515	*H5		
C343	E2	C1005	D5	C1407	C5	C2255	*E5	CL1151	*A2	IC204	*G2	IC2103	B4	R211	G1	R369	*F2	R511	G1	R1207	B5	R1457	*B3	R2259	*E5	RB516	H5		
C344	E2	C1006	D5	C1408	C5	C2256	*E5	CL1152	*A2	IC205	*G2	IC2104	B1	R212	G1	R370	*F2	R513	H5	R1208	B5	R1458	*B3	R2260	*E5	RB517	*H5		
C345	*E3	C1031	D6	C1409	C5	C2257	E5	CL1351	*B2	IC206	*G2	IC2151	D5	R213	G1	R371	*F2	R514	*H5	R1209	B5	R1459	*B3	R2261	*E5	RB518	H5		
C346	E2	C1101	*A5	C1451	B4	C2258	E6	CL1352	*B2	IC207	*G2	IC2152	E5	R214	G1	R372	*F3	R515	H5	R1210	B5	R1460	*B3	R2262	*E5	RB519	F4		
C347	*E2	C1102	A5	C1452	B4	C2259	E6	CL1500	*D2	IC208	*G2	IC2153	*E5	R215	G1	R373	*F3	R516	H5	R1211	B5	R1461	*B3	R2263	*E5	RB520	*H5		
C400	*G3	C1104	A5	C1453	*B4	C2301	*C2	CL1501	H6	IC209	*H2	IC2202	C3	R216	G1	R374	*F3	R517	E4	R1212	B5	R1462	*B3	R2264	E6	RB521	*H5		
C401	G3	C1105	B5	C1454	*B4	C2302	*C2	CL2100	*C2	IC211	*H1	IC2203	C4	R217	G2	R375	*E2	R518	F4	R1215	B5	R1463	*B3	R2265	E6	RB522	H6		
C402	G3	C1106	A5	C1455	*B3	C2303	*C2	CL2300	*C2	IC212	G1	IC2251	E5	R218	*H1	R376	*E2	R524	F4	R1216	B5	R1464	*B3	R2266	*E6	RB523	H6		
C403	*G3	C1107	A5	C1456	*B3	C2304	*C2			IC213	H2	IC2252	E5	R219	H1	R377	*F3	R526	*H5	R1217	B5	R1465	*B3	R2267	*E6	RB528	G4		

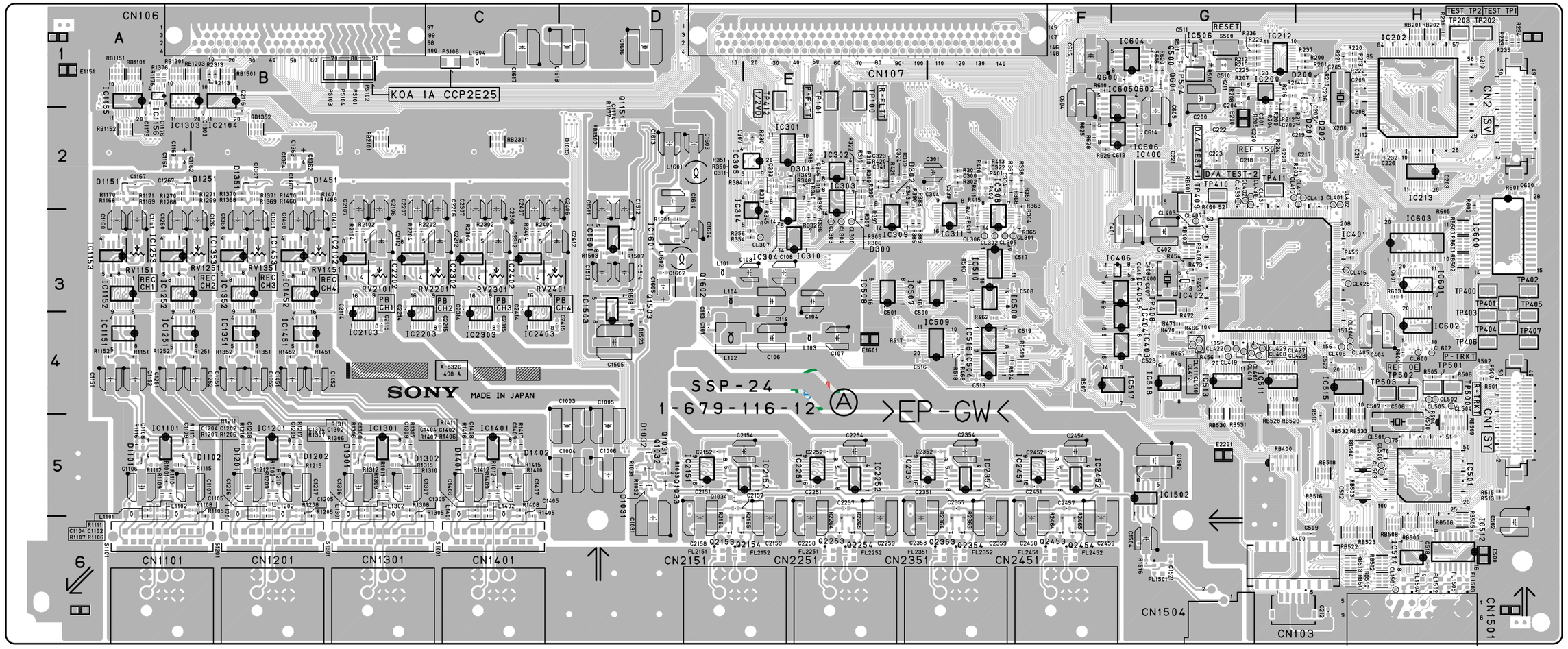

SSP-24/24A -A SIDE-
SUFFIX: -12
FOR DSR-1800/P

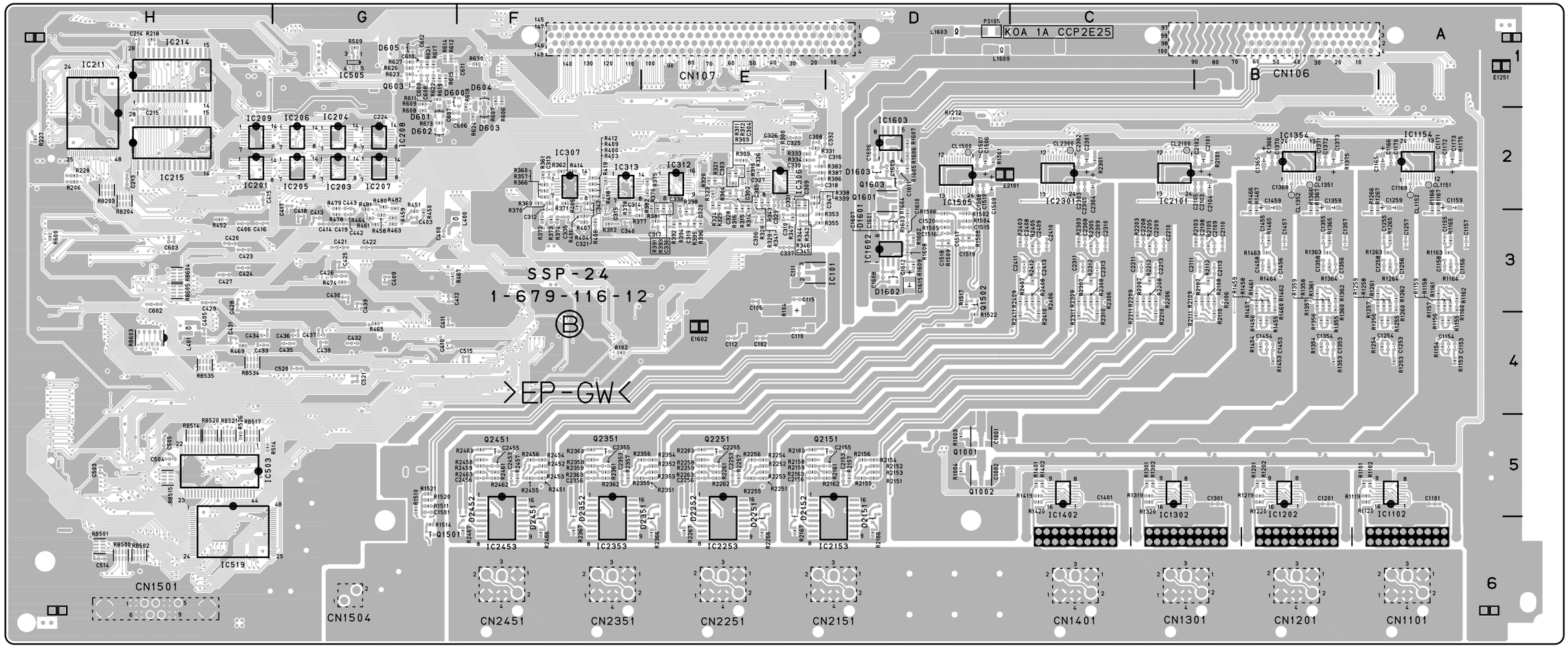

SSP-24/24A -B SIDE-

SUFFIX: -12

FOR DSR-1800/P

VPR-71 (1-679-117-12)

C200	A6	C350	*C5	C525	*C3	C631	D3	C768	*F6	C918	*D5	C1113	*G6	C1265	*E2	D1003	*D3	IC602	C4	L301	A5	PS1002	A1	Q806	E3	R255	*B6	R439	*C1	R565	*C3	R725	H1	R826	*E3	R956	*E5
C201	A6	C351	B4	C526	*C3	C632	*D4	C769	H2	C919	*D5	C1114	*G5	C1266	*E3	D1004	*D2	IC603	*D5	L302	B5	PS1003	D1	Q807	E3	R256	*A6	R440	*C1	R566	*C3	R726	H2	R827	*E4	R957	*E5
C202	*A6	C352	A3	C527	C3	C633	D4	C770	H2	C920	D5	C1115	*G5	C1267	*E3	D1005	*D2	IC604	*D4	L303	C5	PS1004	D1	Q808	E3	R257	A4	R441	*C1	R567	*C3	R727	*H2	R828	*E4	R958	*E6
C203	*A6	C400	A2	C528	C3	C634	*D3	C771	H2	C921	*D6	C1116	*H6	C1268	E4	D1100	*H6	IC605	*D4	L304	C5	PS1005	E1	Q809	*E4	R258	*B6	R442	*B2	R568	*C3	R728	*H2	R829	*E4	R959	D5
C204	*A6	C401	A2	C529	*C3	C635	D4	C772	*G2	C922	*D5	C1117	*H6	C1269	E3	D1200	*F2	IC606	D5	L305	*C5			Q810	*D4	R259	*A5	R443	A2	R569	*C3	R729	*H2	R830	*E4	R960	*E5
C205	*A5	C402	*A2	C530	*C3	C636	D3	C773	*G2	C923	*D6	C1118	*H5	C1300	F3	D1201	*F1	IC607	*D4	L306	*D5	Q200	*A5	Q811	D4	R260	*B6	R444	A2	R570	C3	R730	*H2	R831	E4	R961	E5
C206	B6	C403	*A2	C531	*B3	C637	D4	C774	F5	C924	*E5	C1119	H5	C1302	*G3	D1202	*F1	IC608	*D5	L400	*A2	Q201	*A5	Q812	D4	R261	*B6	R445	*B2	R571	C3	R731	*G2	R832	E4	R962	*D6
C207	*B5	C404	A2	C532	C3	C638	D3	C775	F5	C925	*E5	C1120	H5	C1303	F3	D1203	F1	IC609	*D4	L401	A2	Q202	*B6	Q900	*E5	R262	*C6	R446	*B2	R602	C4	R735	G3	R833	E4	R963	E5
C208	*C5	C405	*A2	C533	C3	C639	*D3	C776	*G2	C926	*E5	C1121	H5	C1304	G3			IC610	*D4	L402	*C2	Q203	*B5	Q901	*D5	R300	*A3	R447	*B1	R603	C4	R736	G3	R834	*E4	R964	E6
C209	A6	C406	*A2	C534	*C3	C640	D3	C777	F6	C927	*E5	C1122	*H5	C1305	*F3	E1000	D4	IC611	D4	L403	*B2	Q204	*C5	Q902	*D5	R301	B4	R448	*B2	R604	C4	R737	G3	R835	E3	R1000	*C6
C210	A6	C407	*A2	C535	*B3	C641	D3	C778	*F6	C928	*E5	C1123	H5	C1306	F3	E1001	H4	IC612	D4	L404	*A2	Q205	*A5	Q903	*D5	R302	A4	R449	A1	R605	C4	R738	G4	R836	E3	R1001	*C6
C211	*A6	C408	*A2	C536	*C3	C642	D3	C779	F5	C929	*E5	C1124	*H5	C1307	*F3	E1002	*F4	IC613	D4	L405	*A2	Q206	A5	Q904	*D5	R303	A4	R450	A2	R606	C4	R739	G4	R837	E3	R1002	*C5
C212	*A6	C409	*A2	C537	*C3	C643	D3	C800	F4	C930	*E5	C1125	*H6	C1308	*G3	E1003	*B4	IC614	D4	L406	*B2	Q207	*A5	Q905	*E5	R304	B4	R451	B1	R607	D4	R740	G4	R838	E3	R1003	D5
C213	B6	C410	*A2	C538	*B3	C644	D3	C801	F4	C931	*E5	C1126	H6	C1309	F4	E1004	B3	IC615	*D4	L407	*C2	Q208	*A5	Q906	*E5	R305	B5	R452	*B2	R608	D4	R741	G4	R839	*E4	R1004	*D5
C214	*A6	C411	*B2	C539	*C1	C645	D4	C802	*F4	C932	*E5	C1127	H5	C1310	*F3	E1005	G5	IC616	D4	L408	*A2	Q209	*A4	Q907	*E5	R306	B5	R453	*B2	R609	*C5	R742	G4	R840	E3	R1005	*D5
C215	*A5	C412	*A2	C540	C3	C646	*D3	C803	F4	C933	*E5	C1128	G5	C1311	*G3			IC617	*D4	L409	*A2	Q210	*B6	Q908	*E5	R307	B5	R454	*B2	R610	*D4	R743	G5	R841	E3	R1006	D5
C216	*A5	C413	*A1	C541	C3	C647	D3	C804	F5	C934	*D5	C1129	*H5	C1312	*G3	FB300	*B3	IC618	*D4	L410	*B2	Q211	*C5	Q909	*E5	R308	B5	R455	B1	R611	*D5	R744	G4	R842	E3	R1007	D5
C217	*A5	C414	*C2	C542	C3	C648	D2	C805	E4	C935	*D5	C1130	H5	C1314	*G3	FB500	*C2	IC619	*D3	L411	A1	Q212	*A4	Q910	*E6	R309	B5	R456	B1	R612	*D4	R745	G4	R843	E3	R1008	*D5
C218	*A5	C415	*B2	C543	C3	C649	D3	C806	*F4	C936	*E6	C1131	H5	C1315	*G3			IC620	D3	L412	*A2	Q213	*A4	Q1000	*D5	R310	*B5	R457	A2	R613	*D4	R746	G5	R844	*E4	R1009	*D5
C219	A5	C416	C2	C545	C2	C650	D3	C807	*F4	C937	D5	C1132	*H5	C1317	G3	FL100	*G6	IC621	D3	L500	C3	Q214	*A4	Q1001	*D5	R311	*B5	R458	A2	R614	*C4	R747	G5	R845	E3	R1010	*D5
C220	*A5	C417	B2	C546	C2	C651	D3	C808	*E4	C938	E5	C1133	*G6	C1318	F3	FL101	*G6	IC700	*H2	L501	C4	Q215	*A3	Q1002	D5	R312	B5	R459	A2	R615	D4	R748	*F5	R846	E3	R1011	*D5
C221	*A3	C418	*A2	C547	C2	C652	C2	C809	*F4	C939	*D5	C1134	H5	C1320	*G3	FL200	*B6	IC701	G2	L502	B3	Q300	B5	Q1003	*C6	R313	B5	R460	A2	R616	D5	R749	*F5	R847	*E4	R1012	D5
C222	C6	C419	*B2	C548	C2	C653	D2	C810	*F4	C940	*E5	C1135	H5	C1321	*G3	FL201	*C6	IC702	*H2	L503	*C1	Q301	*B5	Q1004	*D6	R314	B5	R461	A2	R617	*D5	R750	*F5	R848	*E4	R1013	D5
C223	*C6	C420	*B2	C549	C3	C654	*D3	C811	*E4	C941	E6	C1136	G6	C1322	F3	FL202	*B6	IC703	*H2	L600	C3	Q302	*C5	Q1005	*D5	R315	B5	R462	*C1	R618	*D4	R751	*F5	R849	*E4	R1014	D6
C224	B5	C421	*A2	C550	C2	C700	G3	C812	*E4	C942	D6	C1137	G6			FL203	*B6	IC704	*H1	L601	C3	Q303	*C5	Q1006	*C6	R316	B5	R463	*C1	R619	*D4	R752	*F5	R850	*E4	R1015	D6
C225	B6	C422	*A2	C551	C2	C701	*H2	C813	*F4	C943	*E5	C1138	G5	CL100	B1	FL204	A4	IC705	*F4	L602	D3	Q400	*A2	Q1007	*C6	R317	*B5	R464	*B1	R620	*C4	R753	*F5	R851	*D4	R1016	*C5
C226	C6	C423	*B2	C552	C2	C702	G1	C814	*E5	C944	*D6	C1139	G5	CL101	B1	FL205	*B6	IC706	*F6	L603	D3	Q401	*A2	Q1200	*F4	R318	*C5	R465	*B1	R621	D5	R754	*F5	R852	*E4	R1017	*C6
C227	*A4	C424	*B2	C554	*C2	C703	*H2	C815	*E4	C945	*D5	C1200	F1	CL102	B1	FL300	B4	IC707	*G2	L604	D3	Q402	*A2	Q1201	*F3	R319	*C5	R466	*B1	R622	D5	R755	*F5	R853	*D4	R1018	*C5
C228	*A4	C425	*A1	C555	C2	C704	*H2	C816	F4	C1000	D1	C1201	*F2	CL103	F1	FL301	C4	IC708	*G2	L605	D2	Q403	*A2	Q1202	F1	R320	B5	R467	*B2	R623	C4	R756	*F5	R854	*D4	R1019	*D6
C229	*A4	C426	C2	C556	B2	C705	*H2	C817	F4	C1001	E1	C1202	*G1	CL104	G1	FL302	C4	IC709	G3	L700	H3	Q404	*A2	Q1203	*E3	R321	C5	R500	*B4	R624	C4	R757	*F5	R855	*D4	R1020	*D6
C230	*A4	C427	B2	C557	B2	C706	*G2	C818	E4	C1002	A1	C1203	*F2	CL105	G1	FL700	F4	IC710	*F6	L701	H1	Q405	*A2	Q1204	F1	R322	C5	R501	*B4	R625	*D4	R758	*F6	R856	D4	R1021	*D6
C231	*A3	C428	*A2	C558	C2	C707	*H2	C819	E4	C1003	D1	C1204	*F2	CL106	G1	FL701	G4	IC800	*F4	L702	G1	Q406	*A2	Q1205	F1	R323	*B5	R502	*C4	R626	*D3	R759	*F5	R857	D4	R1022	*D5
C232	*A4	C429	B2	C559	C2	C708	*H2	C820	*E4	C1004	D1	C1205	E2	CL107	G1	FL702	G4	IC801	*F4	L703	G3	Q407	*B2	Q1206	F1	R324	*C5	R503	*C4	R627	*D3	R760	F6	R858	D4	R1023	*D5
C233	*A3	C430	B1	C560	*C2	C709	*H2	C821	*E4	C1005	D1	C1206	E2	CL400	B2	FL703	*F6	IC802	*F4	L704	H3	Q408	*A2	Q1300	*F3	R325	*C5	R504	*C4	R628	*D3	R761	F6	R859	E4	R1024	*C5
C234	A3	C431	B2	C561	C2	C710	*H2	C822	*E4	C1006	E1	C1207	*F4	CL600	D5	FL704	*F6	IC803	*E4	L705	H3	Q409	*A2	Q1301	*G3	R326	*B5	R505	*C4	R629	*D3	R762	*F6	R860	E4	R1025	*C5
C235	A4	C432	B2	C562	*B3	C711	*G2	C823	*E4	C1007	*A1	C1208	F4	CL601	C5	FL800	E4	IC804	*E4	L706	H3	Q410	*B2	Q1302	*G3	R327	*B5	R506	*C4	R630	*D4	R763	*F6	R861	E4	R1026	*C6
C236	A3	C433	*A2	C563	*C2	C712	G1	C824	*E4	C1008	D1	C1209	F3	CL602	D5	FL900	*E6	IC805	*E4	L707	F4	Q411	A2			R328	*C5	R507	*C4	R631	*D4	R764	*F6	R862	*D4	R1027	*C5
C237	*A3	C434	*A2	C564	C3	C713	G1	C825	*E4	C1009	D1	C1210	F3	CL603	C5	FL901	*E6	IC806	E4	L708	F5	Q412	A2	R200	*B6	R329	*C5	R508	*C4	R632	*D3	R765	*F5	R900	*D6	R1028	*C6
C238	*A3	C435	B2	C565	*B2	C714	*G2	C826	*E4	C1010	A1	C1211	*F3	CL604	D3	FL902	*E6	IC807	*E4	L709	*F5	Q413	*B2	R201	*C6	R330	*C4	R509	*C4	R633	D3	R766	*F5	R901	*E5	R1029	*C6
C239	*A3	C436	B2	C566	C2	C715	G2	C827	*E4	C1011	D2	C1212	*F3	CL605	D3	FL903	*D6	IC808	E4	L710	F5	Q414	*B2	R202	*B6	R331	*C4	R510	*B3	R634	D3	R767	*F5	R902	*E5	R1030	*C6
C240	B6	C437	B2	C567	*B2	C716	*H2	C828	*E4	C1012	D1	C1213	*F3	CL606	D3	FL904	*E6	IC900	E5	L711	*F5	Q500	*B4	R203	*B6	R332	*B4	R511	*B4	R635	D3	R768	*F5	R903	*E5	R1037	D5
C241	A5	C438	A2	C568	C2	C717	*H2	C829	E4	C1013	E1	C1214	*F3	CL607	D3	FL1000	*D6	IC901	*E6	L712	*F5	Q501	*C4	R204	*A6	R333	A3	R512	*B3	R636	*D4	R769	*F5	R904	*E5	R1100	*G6
C300	*A3	C439	B2	C569	C2	C718	G3	C830	E4	C1014	A1	C1215	*F4	CL608	D3	FL1200	*F1	IC902	E6	L713	*F6	Q502	*C4	R205	*A6	R334	A3	R513	*B3	R637	*D4	R770	*F5	R905	E5	R1101	*G6
C301	A3	C440	*A2	C570	C2	C719	H3	C831	*E4	C1015	D2	C1216	*F4	CL700	G2	FL1201	*F1	IC903	*E5	L800	F4	Q503	*C4	R206	*A5	R335	A4	R514	*C4	R638	*D3	R771	*F5	R906	E5	R1102	*G6
C302	*A3	C441	*A2	C571	C2	C720	*G2	C832	E4	C1016	D1	C1217	*F3	CL701	G2			IC904	*E5	L801	F4	Q504	*C4	R207	*A5	R336	A4	R515	*C3	R639	*D4	R772	*F5	R907	E5	R1103	*G6
C303	*A3	C442	B1	C572	C2	C721	G2	C833	E4	C1017	E1	C1218	*F4	CL702	G2	IC200	*B5	IC905	*E5	L802	*E4	Q505	*B4	R208	*A5	R337	B4	R516	*B3	R640	*D3	R773	*F5	R908	*E5	R1104	*G6
C304	*A3	C443	*B2	C573	*C2	C722	G2	C834	*E4	C1018	*D1	C1219	*F4	CL1201	G1	IC201	*A5	IC906	E5	L803	E4	Q506	*B4	R209	*A6	R338	B4	R517	*C4	R641	D2	R774	*F5	R909	*E6	R1105	*G5
C305	*A3	C444	C1	C574	*C1	C723	G2	C835	E4	C1019	*E1	C1220	*F2	CL1203	F1	IC202	*A5	IC907	*D6	L804	E3	Q507	*B3	R210	*A5	R339	B4	R518	*C4	R642	*D3	R775	*F6	R910	*E6	R1106	*G5
C306	*A3	C445	A2	C575	C1	C724	G2	C836	*E4	C1020	*E2	C1221	*F2	CL1205	F3	IC203	*A5	IC1000	*D1	L805	E3	Q508	*C4	R211	*A5	R340	B4	R519	*B3	R643	D2	R776	*F6	R911	E5	R1107	*G5
C307	*A3	C446	C1	C576	C2	C725	H1	C837	*E4	C1021	*E3	C1222	F2			IC204	*A4	IC1001	*E1	L806	E3	Q509	*C4	R212	*A5	R341	B5	R520	*C4	R644	D3	R777	F6	R912	E5	R1108	*G6
C308	*A3	C447	*B2	C577	*C2	C726	G1	C838	E3	C1022	*D2	C1223	*F2	CN102	G6	IC300	*A3	IC1002	E1	L807	E3	Q510	*C4	R213	*B6	R342	B5	R521	*C4	R645	*D3	R778	F6	R913	*E6	R1109	*G5
C309	*A3	C448	*C2	C578	*C1	C727	G1	C839	E3	C1023	*D2	C1224	*F2	CN104	B1	IC301	*B4	IC1003	E2	L808	*E4	Q511	*C4	R214	*B6	R343	B5	R522	*C4	R646	D3	R779	*E6	R914	*E6	R1110	*G5
C310	*A3	C449	*B2	C579	*C2	C728	G2	C840	*E4	C1024	D1	C1225	*F2	CN105	G1	IC302	*B4	IC1004	D1	L809	*E4	Q512	*B3	R215	*B5	R344	B5	R523	*C4	R647	*D3	R780	*F6	R915	E6	R1111	*G5
C311	*A3	C450	*B2	C580	B3	C729	G2	C841	E3	C1025	E1	C1226	*F2	CN200	B6	IC303	*B4	IC1005	D2	L900	*E5	Q513	*C4	R216	*B5	R400	*A2	R524	*C3	R648	D2	R781	*F6	R916	E5	R1112	*G6
C312	*B3	C451	B1	C581	C3	C730	G2	C842	E3	C1026	E2	C1227	F1	CN201	B6	IC304	B4	IC1006	*D5	L901	*E5	Q514	*C4	R217	*B5	R401	*A2	R525	*C3	R649	D2	R782	*G2	R917	*D5	R1113	*G6
C313	*B4	C452	*B1	C582	C4	C731	G2	C843	*E4	C1027	D3	C1228	F1	CN202	A6	IC305	B4	IC1007	*D5	L902	D5	Q515	*C4	R218	*B5	R402	*A2	R526	*C3	R650	D3	R783	G1	R918	*D5	R1114	*G6
C314	A3	C453	B1	C583	C2	C732	G2	C844	E3	C1028	D2	C1229	*F2	CN901	D6	IC306	B4	IC1008	D5	L903	*E5	Q516	*C4	R219	*A5	R403	*A2	R527	*C3	R651	D3	R790	*H2	R919	*D5	R1115	*G6
C315	B3	C454	*B2	C584	*C3	C733	G3	C845	E3	C1029	D2	C1230	F1	CN902	E6	IC307	B5	IC1009	*D5	L904	*E6	Q517	*C3	R220	*A5	R404	*A2	R528	*C3	R652	D4	R791	*H2	R920	*D5	R1116	*G5
C316	B3	C455	*C1	C585	*C3	C734	H3	C846	E3	C1030	E1	C1231	*F2	CN903	F6	IC308	*B5	IC1100	*H6	L905	*E5	Q518	*C3	R221	*A5	R405	*A2	R529	*C3	R653	D2	R792	G3	R921	*D5	R1117	G5
C317	*B3	C456	C1	C586	C3	C735	*H1	C847	E3	C1031	E1	C1232	*F2	CN1001	C6	IC309	B5	IC1101	*G5	L1000	A1	Q519	*C3	R222	A5	R406	*A2	R530	*C3	R654	D2	R793	G3	R922	*D5	R1118	G5
C318	*B3	C457	*B2	C587	C3	C736	G3	C848	E3	C1032	D5	C1233	F1	CN1100	H6	IC310	C5	IC1102	*H6	L1001	D2	Q520	*C3	R223	A5	R407	*A2	R531	*C3	R655	D3	R794	H2	R923	*D5	R1119	G5
C319	B3	C458	*B2	C600	C4	C737	G3	C849	E3	C1033	D5	C1234	F1			IC311	C5	IC1103	*H5	L1002	D1	Q521	*C3	R224	A5	R408	*A2	R532	*C3	R656	D3	R795	H2	R924	*D5	R1120	G5
C320	B3	C459	A1	C601	D4	C738	H1	C850	*E4	C1034	*D5	C1235	*F3	CT600	D3	IC400	B2	IC1104	G5	L1003	E1	Q522	*C3	R225	A5	R409	*A2	R533	*C3	R657	D3	R796	H2	R925	*D5	R1121	*G5
C321	A4	C460	*B2	C602	D4	C739	*H1	C851	*E4	C1035	*D5	C1236	*F3			IC401	*A1	IC1105	*H5	L1004	E1	Q600	*D4	R226	*A5	R410	*A2	R534	*C3	R658	D3	R797	H2	R926	*D5	R1122	*G5
C322	B4	C461	A2	C603	C4	C740	G3	C852	*E4	C1036	D6	C1237	*F3	D200	*A5	IC402	*A2	IC1106	*G5	L1005	*D5	Q601	*D3	R227	*A5	R411	A2	R535	*C3	R659	D2	R798	H1	R927	*D5	R1125	*H6
C323	B4	C462	A1	C604	*D5	C741	G3	C853	*E4	C1037	*C6	C1238	*F4	D201	B6	IC403	*A2	IC1107	*G5	L1006	*C6	Q602	*D3	R228	*A5	R412	*A2	R536	*C3	R660	D2	R799	H2	R928	*D5	R1126	*H6
C324	A4	C463	*B2	C605	D4	C742	G3	C854	*D4	C1038	*C6	C1239	*F3	D202	*C6	IC404	*B1	IC1108	G5	L1007	*C5	Q603	D4	R229	*A5	R413	*A2	R537	*C3	R661	D2	R800	*F4	R929	D6	R1127	*G6
C325	B5	C500	*C4	C606	*C5	C743	*G2	C855	*D4	C1039	C5	C1240	*F3	D203	*A3	IC405	*B2	IC1109	G5	L1008	C5	Q700	G4	R230	*A4	R414	*B2	R538	C3	R662	D2	R801	*F4	R930	*D6	R1128	*H6
C326	A5	C501	*C3	C607	C5	C744	H3	C856	D4	C1040	*D6	C1241	*F2	D204	*A5	IC406	A2	IC1200	*F2	L1009	D5	Q701	G4	R231	*A4	R415	*A2	R539	*C3	R701	G1	R802	*F4	R931	*E5	R1129	*H5
C327	B5	C502	B3	C608	*C4	C745	G5	C857	*F4	C1041	C6	C1242	*F2	D300	*A3	IC407	*B2	IC1201	*G2	L1100	H5	Q702	G5	R232	*C6	R416	*B2	R540	B3	R702	*H2	R803	*F4	R932	*E5	R1130	H5
C328	B5	C503	C3	C609	*D5	C746	G5	C858	*F4	C1042	*D6	C1243	*F2	D301	B5	IC408	A2	IC1202	*F1	L1101	H5	Q703	G5	R233	*C6	R417	*B2	R541	B3	R703	G1	R804	*F4	R933	*E5	R1131	H6
C329	B5	C504	C4	C610	*D4	C747	G4	C859	D4	C1043	*C5	C1244	*F1	D400	*A2	IC409	*B2	IC1203	*F2	L1200	*F1	Q704	*F5	R234	*B6	R418	*A2	R542	*C3	R704	H2	R805	*E4	R934	*E5	R1132	*H5
C330	B5	C505	C4	C611	*D5	C748	G4	C860	E4	C1044	D5	C1245	*F1	D401	A2	IC410	*A2	IC1204	*F3	L1201	*E2	Q705	*F5	R235	*C6	R419	*A2	R543	B3	R705	G1	R806	F4	R935	*E5	R1133	H5
C331	B5	C506	C4	C612	*C4	C749	*F4	C861	D4	C1045	D6	C1246	*F1	D402	*B2	IC500	*C4	IC1205	*F3	L1202	*E2	Q706	*F5	R236	*B6	R420	*A2	R544	C2	R706	*H2	R807	F5	R936	*E5	R1134	*H5
C332	*B5	C507	C4	C613	*C4	C750	F4	C900	E5	C1046	*C6	C1247	*F1	D403	*A2	IC501	C1	IC1206	*F3	L1203	F4	Q707	*F5	R237	*C5	R421	*A2	R545	C2	R707	*H2	R808	F4	R937	*E5	R1135	H5
C333	B5	C508	B3	C614	D4	C751	F4	C901	*E5	C1047	C6	C1248	*F2	D404	*A2	IC502	*B3	IC1207	*F2	L1204	F4	Q708	*F6	R238	*B6	R422	*B2	R546	*C2	R708	*H2	R809	F4	R938	*E5	R1136	H6
C334	B5	C509	C4	C615	D5	C752	F5	C902	E5	C1048	E1	C1249	*F2	D405	*B2	IC503	C3	IC1208	*F2	L1205	*F3	Q709	*F6	R239	*C5	R423	*A1	R547	*B3	R709	*H2	R810	*E4	R939	*E5	R1137	*H5
C335	B5	C510	C4	C616	*C4	C753	F5	C903	*E5	C1049	E1	C1250	*F2	D500	*B3	IC504	B3	IC1209	*F2	L1206	*F3	Q710	*F6	R240	*A4	R424	*B2	R548	*B3	R710	H2	R811	*E4	R940	*E5	R1138	G5
C336	B5	C511	C4	C617	D5	C754	*F5	C904	*E5	C1050	*C6	C1251	F2	D501	*C3	IC506	*C2	IC1210	*F3	L1207	F1	Q711	*F5	R241	*A4	R425	*B2	R549	*C2	R711	H3	R812	*E5	R941	*E5	R1139	*H5
C337	B5	C512	C4	C618	*D4	C755	*F5	C905	E5	C1100	*G6	C1252	G2	D502	*C3	IC507	*C2	IC1211	*F1	L1208	F1	Q712	*F5	R242	*A4	R426	B2	R550	*C2	R712	*H2	R813	*E4	R942	*E6	R1140	G5
C338	C5	C513	C4	C619	*D4	C756	*F5	C906	E5	C1101	*G6	C1253	F2	D503	*C2	IC508	C2	IC1212	*F1	L1209	*F1	Q713	*F5	R243	*A4	R427	A2	R551	*C2	R713	*H2	R814	*F4	R943	*E6	R1142	*H6
C339	C5	C514	*B4	C620	D5	C757	*F5	C907	E6	C1102	*G6	C1254	F2	D504	C2	IC509	*B2	IC1213	F2	L1210	*F1	Q714	*F5	R244	*A4	R428	*A2	R552	*C2	R714	H2	R815	E4	R944	*E5	R1143	*H6
C340	C5	C515	*C4	C621	*D4	C758	*F5	C908	*E6	C1103	*G6	C1255	F1	D600	*D5	IC510	*C2	IC1214	*E2	L1211	F1	Q715	*F6	R245	*A4	R429	*A2	R553	*C2	R715	H2	R816	E4	R945	*E5	R1144	*G5
C341	D5	C516	*C4	C622	*C4	C759	*F6	C909	*E6	C1104	*G5	C1256	F1	D601	*D3	IC511	*C2	IC1215	*F2	L1212	E2	Q716	*F6	R246	*A4	R430	B2	R554	C2	R716	*H2	R817	E4	R946	*E5	R1145	*G5
C342	*C5	C517	*C4	C623	D4	C760	*F6	C910	E5	C1105	*G5	C1257	*E2	D602	D4	IC512	C1	IC1216	E4	L1300	*G3	Q717	*F6	R247	*A4	R431	*A2	R555	C1	R717	*H2	R818	E4	R947	*E5	R1146	*G5
C343	*D5	C518	*C4	C624	D3	C761	F5	C911	E6	C1106	*G5	C1258	*E2	D700	*G2	IC513	*C2	IC1217	E4	L1302	*G3	Q718	*G2	R248	*A3	R432	*A2	R557	C2	R718	*H2	R819	*E4	R948	*E5	R1147	*G6
C344	B5	C519	*C4	C625	C3	C762	*F5	C912	E6	C1107	*G5	C1259	E2	D701	*H2	IC514	C2	IC1300	F3	L1303	F4	Q800	*E4	R249	*A3	R433	B2	R559	C1	R719	*H2	R820	*E4	R949	*E5	R1148	*G6
C345	C5	C520	*C4	C626	C3	C763	*F5	C913	E6	C1108	*G5	C1260	*E3	D900	*D5	IC515	C2					Q801	*E4	R250	*A3	R434	B2	R560	C1	R720	*H2	R821	*E4	R950	*E6	R1149	*G6
C346	C5	C521	*B3	C627	C3	C764	F5	C914	E5	C1109	*G5	C1261	*E3	D901	E5	IC516	C2	L200	A5	LV600	D3	Q802	*E3	R251	A4	R435	*B2	R561	C1	R721	*H2	R822	*E4	R952	E5	R1150	*G6
C347	C5	C522	*C4	C628	*D3	C765	*F5	C915	D5	C1110	*G5	C1262	E2	D1000	*D1	IC517	C3	L201	A5			Q803	*E4	R252	*A4	R436	*A2	R562	C1	R722	*H2	R823	*E4	R953	E5	R1151	*G6
C348	C5	C523	*C4	C629	*D3	C766	*F5	C916	D5	C1111	*G5	C1263	F2	D1001	*E1	IC600	C4	L202	C5	PS1000	D1	Q804	*E4	R253	A3	R437	*B2	R563	C1	R723	*H2	R824	*E4	R954	E5	R1152	*G5
C349	C5	C524	*C3	C630	*D3	C767	*F5	C917	*D5	C1112	*G5	C1264	F1	D1002	*E2	IC601	D4	L300	A3	PS1001	E1	Q805	E3	R254	*A3	R438	*B2	R564	*C3	R724	*G2	R825	*E4	R955	E5	R1153	*G5

14-42 14-42

R1154	*G5	R1307	*G3	TP1203	F3
R1155	*G5	R1308	*G3	TP1204	F2
R1202	*G2	R1310	*G3		
R1203	*F2	R1311	*F3	X400	B1
R1204	*F2	R1312	*G3	X401	A2
R1205	*F2	R1313	*G3	X700	H2
R1206	*F1			X701	H2
R1207	*F1	RB300	*B4	X702	H2
R1208	*F2	RB301	*A4	X1200	F2
R1209	F2	RB302	*B4	X1201	F2
R1210	*F3	RB303	*B4		
R1211	*F4	RB304	*B4	*:B SIDE	
R1212	*F3	RB305	B5		
R1213	*F3	RB306	B5		
R1214	*F3	RB500	*C1		
R1215	*F4	RB501	*C1		
R1216	*F3	RB502	C1		
R1217	*F4	RB503	*C1		
R1218	*F4	RB504	*C1		
R1219	*F4	RB1200	*F1		
R1220	*F4	RB1201	*F1		
R1221	F1	RB1202	*G1		
R1222	*F2	RB1205	*F1		
R1223	F2				
R1224	F2	RV200	A5		
R1225	*E3	RV201	A5		
R1226	*F2	RV202	A4		
R1227	*F2	RV300	B5		
R1228	*F2	RV301	B5		
R1229	F2	RV302	B5		
R1230	F2	RV400	A2		
R1231	*F2	RV500	B4		
R1232	*F2	RV501	C3		
R1233	*F2	RV502	C3		
R1234	*F2	RV503	B3		
R1235	*F2	RV504	C3		
R1236	F2	RV505	C3		
R1237	F2	RV506	C3		
R1238	*F3	RV507	C3		
R1239	F1	RV508	C3		
R1240	F2	RV509	C3		
R1241	F2	RV600	C4		
R1242	F1	RV601	D3		
R1243	*F4	RV700	H2		
R1244	*F3	RV701	H2		
R1245	*F3	RV702	H2		
R1246	*F1	RV703	F5		
R1247	F1	RV704	F6		
R1248	*F2	RV705	F5		
R1249	*F2	RV706	F6		
R1250	*F2	RV800	F4		
R1251	*F1	RV801	F4		
R1252	*F1	RV802	E4		
R1253	*F1	RV803	E4		
R1254	*F2	RV804	E4		
R1255	*F1	RV900	E5		
R1256	F1	RV901	E5		
R1257	G1	RV902	D6		
R1258	F1	RV903	E5		
R1259	F2	RV904	E6		
R1260	*E2	RV905	E5		
R1261	*E2	RV1000	D5		
R1262	*E3	RV1001	D5		
R1263	*E2	RV1002	D5		
R1264	*E3	RV1100	G5		
R1265	*E3	RV1101	G5		
R1266	*E3	RV1200	F2		
R1267	*E3	RV1201	F2		
R1268	*E2				
R1269	*E2	S300	A5		
R1271	*F2				
R1272	F2	THP110	*G5		
R1273	*E3	THP300	B5		
R1274	*E3	THP800	*E4		
R1275	*E3				
R1276	*E2	TP200	B5		
R1277	*E2	TP300	A3		
R1278	*E2	TP400	B2		
R1279	*E3	TP401	A2		
R1280	*E3	TP402	B3		
R1281	*G5	TP403	B2		
R1282	*G5	TP404	B1		
R1283	*F1	TP500	B3		
R1284	*F1	TP501	C3		
R1285	E4	TP502	C3		
R1300	F3	TP600	D3		
R1301	*G3	TP700	F4		
R1302	*G3	TP701	G4		
R1303	F3	TP702	G4		
R1304	*F3	TP1200	F3		
R1305	F3	TP1201	F2		
R1306	*F3	TP1202	F2		

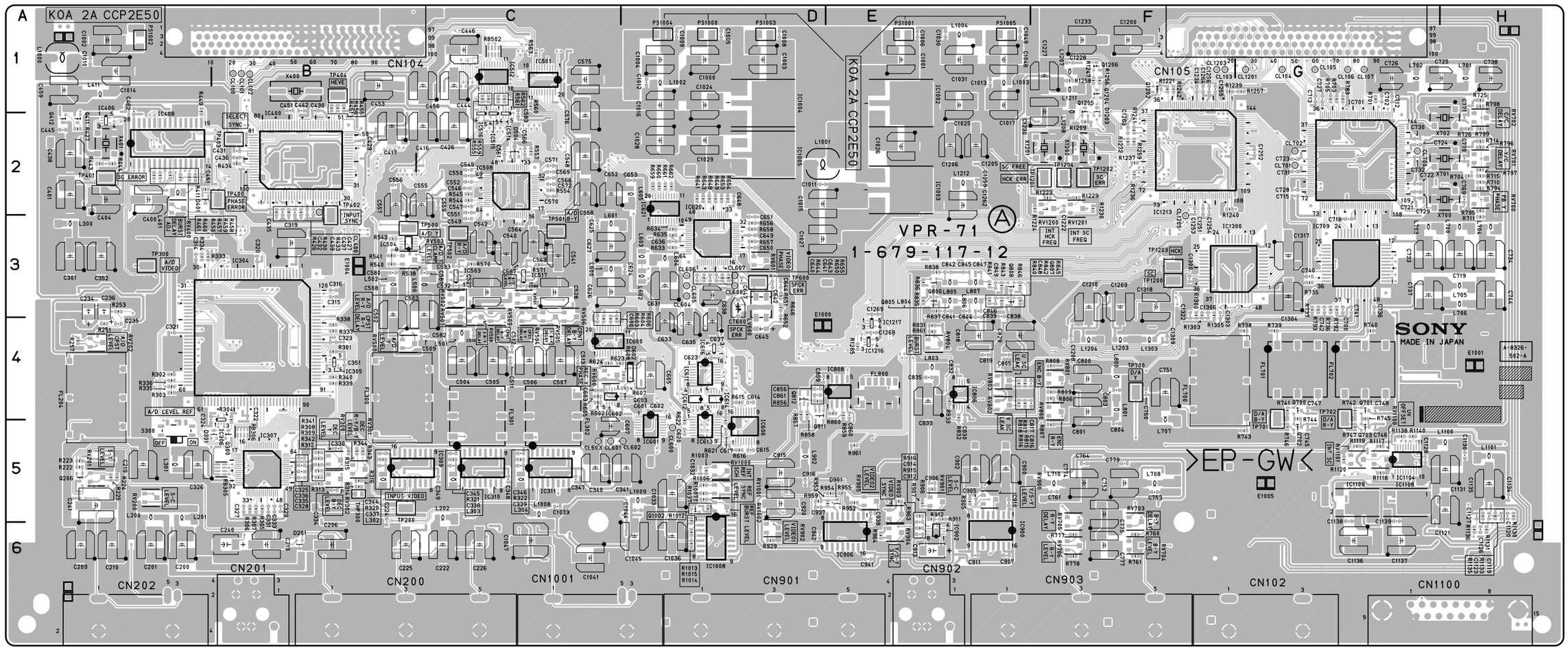

VPR-71 -A SIDE-
SUFFIX: -12
FOR DSR-1800/P

http://getMANUAL.com

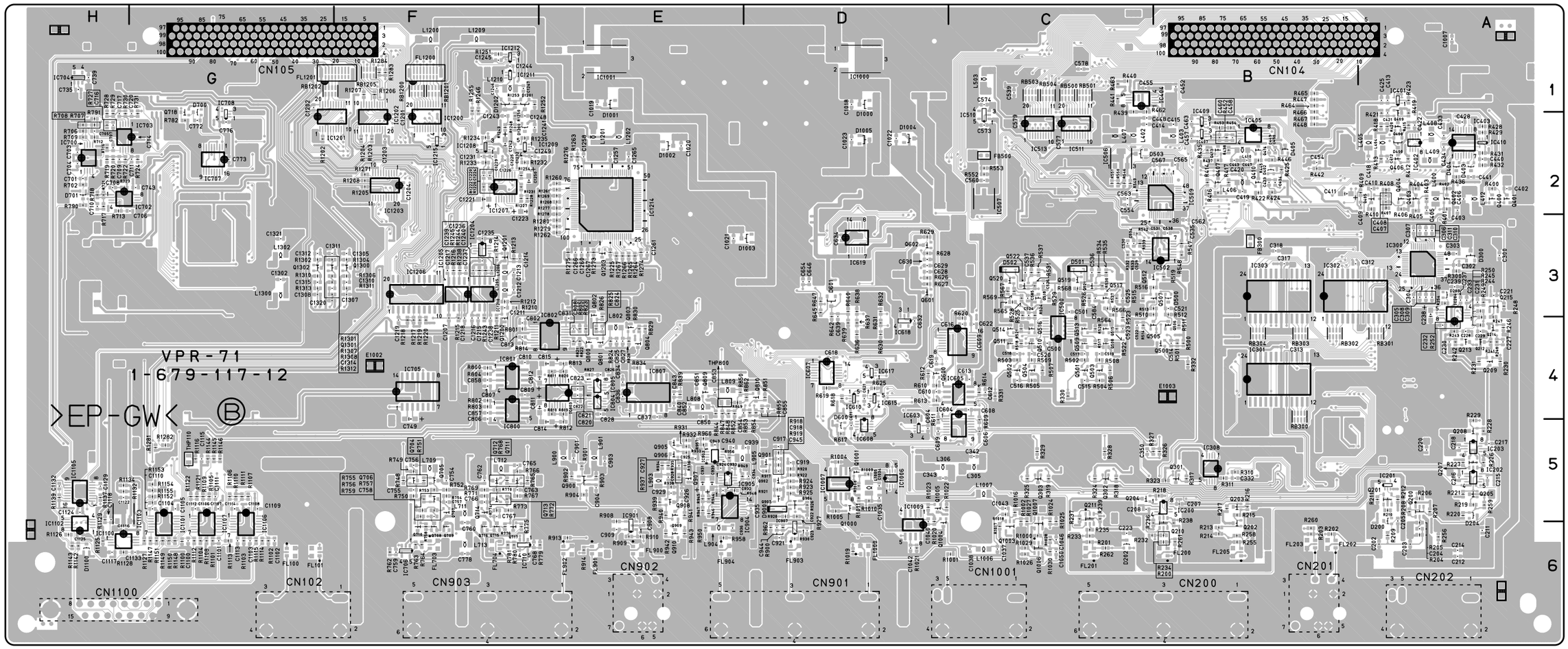

VPR-71 -B SIDE-
SUFFIX: -12
FOR DSR-1800/P

Section 15
Schematic Diagrams

Index

Board Name	Circuit Configuration	Page
AC-212	Line filter	15-183
CC-83	Cassette compartment mode detection/intermediate board	15-3
CC-84	Cassette compartment cassette type detection	15-3
CC-85	Cassette compartment cassette in detection	15-3
CN-1863	Sensor input/output board	15-3
CN-2021	Intermediate board between CC-84 and CC-85	15-185
CN-2022	Intermediate board between CC-83 and CC-84	15-185
DPR-175	Digital process	15-4
DR-428	Servo/mechanism control	15-28
DV-26	i.LINK/DV input/output board (Option: DSBK-1803)	15-33
DY-16	Fluorescent display board/audio meter	15-38
FU-78P	Digital process (PB)	15-41
FU-78R	Digital process (REC)	15-41
HP-108	Headphone interface	15-46
IF-820	Analog video/audio input・output process	15-47
KY-484/484A	Operation panel	15-61
MB-920	Mother board	15-67
MB-927	Mother board	15-72
PRE-45	RF PB, ATF detection	15-76
PTC-100	Search dial sensor	15-84
RP-120	RF REC/PB, ATF detection	15-85
SDI-61	SDTI (QSDI) input/output board (Option: DSBK-1802)	15-104
SDI-61A	SDTI (QSDI) output board (Option: DSBK-1602)	15-104
SDI-62	SDI, AES/EBU input/output board (Option: DSBK-1801)	15-110
SDI-62A	SDI, AES/EBU output board (Option: DSBK-1601)	15-110
SE-521	Mode sensor/tape end sensor/loading motor FG sensor	15-121
SE-522	Tape top sensor/reel position sensor (Mini/M/Standard)	15-121
SE-525	LED signal board	15-121
SE-538	Tension sensor	15-121
SSP-23	System/servo/analog audio input・output process	15-122
SSP-24/24A	System/servo/digital process	15-145
VPR-71	Analog video input・output process/reference	15-163
Frame Wiring	For DSR-1600/1600P	15-183
Frame Wiring	For DSR-1800/1800P	15-187

CC-83, CC-84, CC-85, CN-1863

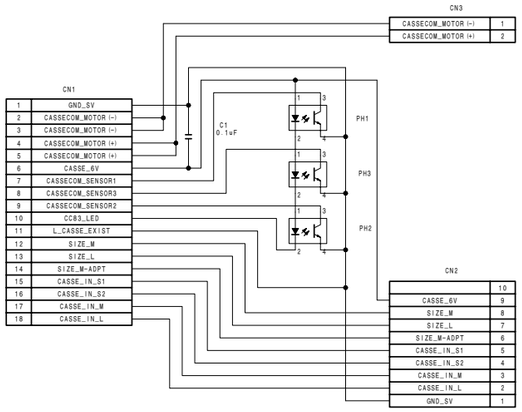

Cassette compartment mode detection/intermediate board

CC-83

BOARD NO. 1-675-547-11
LOT NO. 064-
DSR-2000_CC-83_C11_1

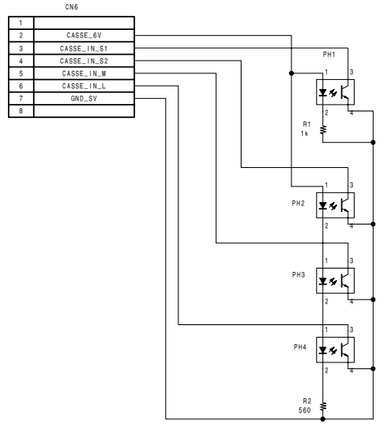

Cassette compartment cassette in detection

CC-85

BOARD NO. 1-675-549-11
LOT NO. 064-
DSR-2000_C87_C11_1

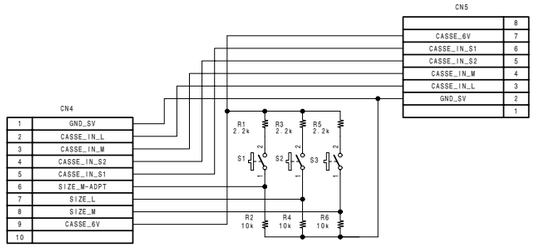

Cassette compartment cassette type detection

CC-84

BOARD NO. 1-675-548-11
LOT NO. 064-
DSR-2000_CC-84_C11_1

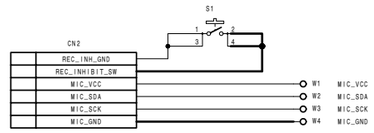

Sensor input/output board

CN-1863

BOARD NO. 1-675-518-11
LOT NO. 064-
DSR-2000_CN-1863_C11_1

DPR-175 (1/14)

ggM

15-4

DPR-175 (1/14)

i.LINK

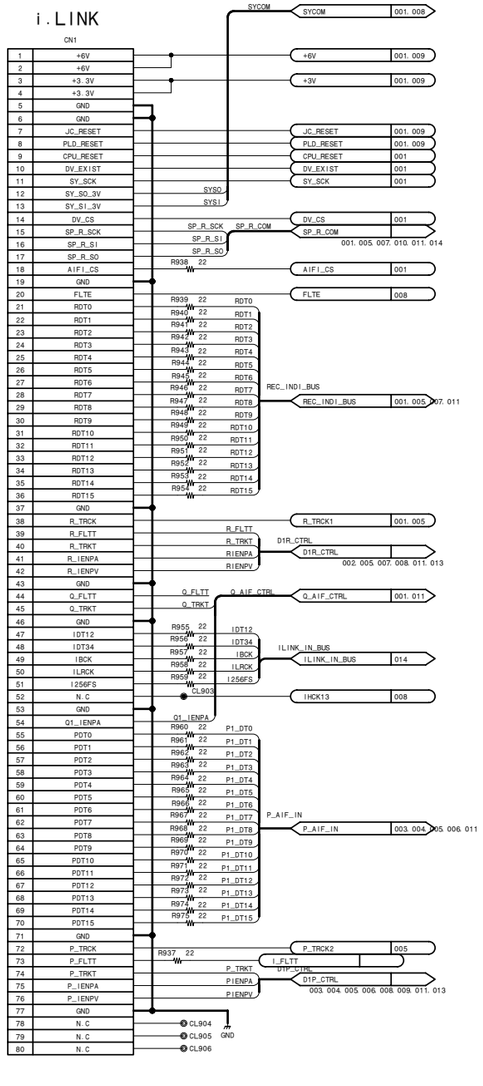

SDTI

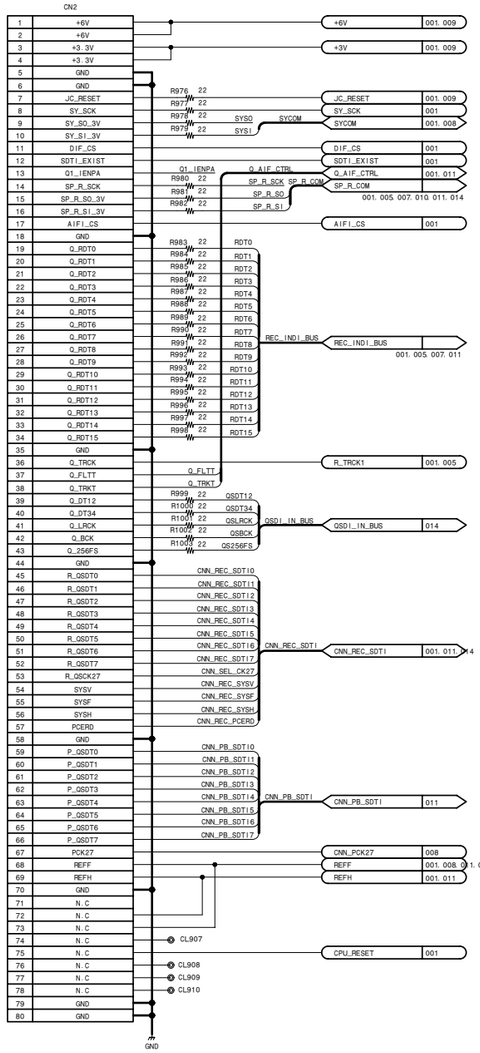

SDI_AES/EBU

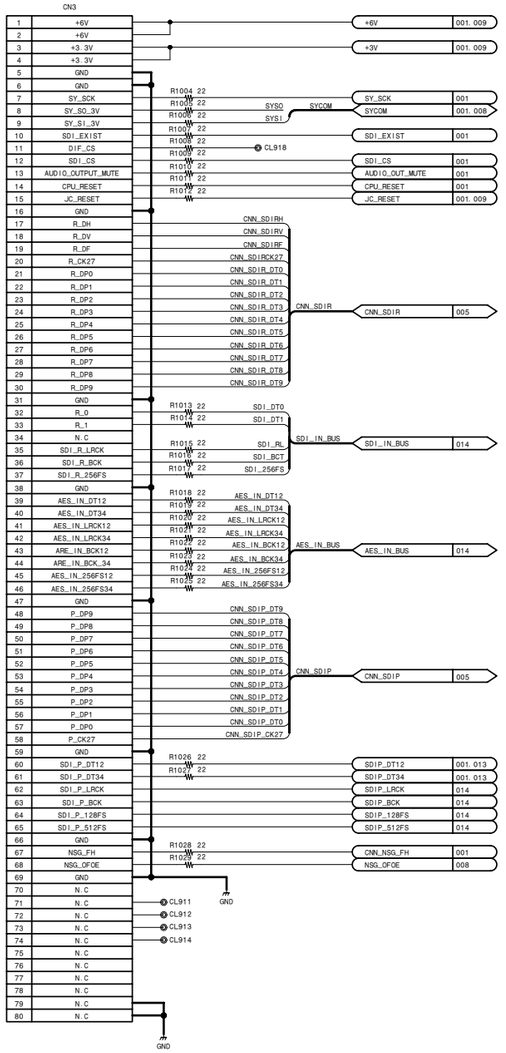

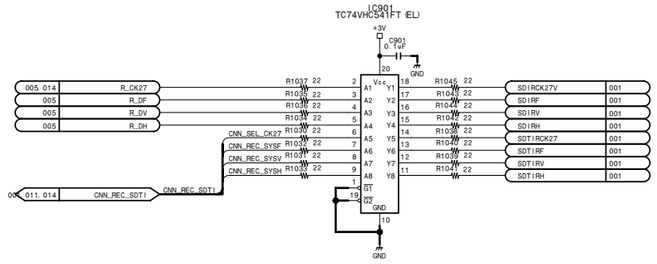

Digital process

DPR-175 (1/14)

BOARD NO. 1-679-111-11, 12

LOT NO. 064-

DSR-1800_DPR-175_012_1

DPR-175 (2/14)

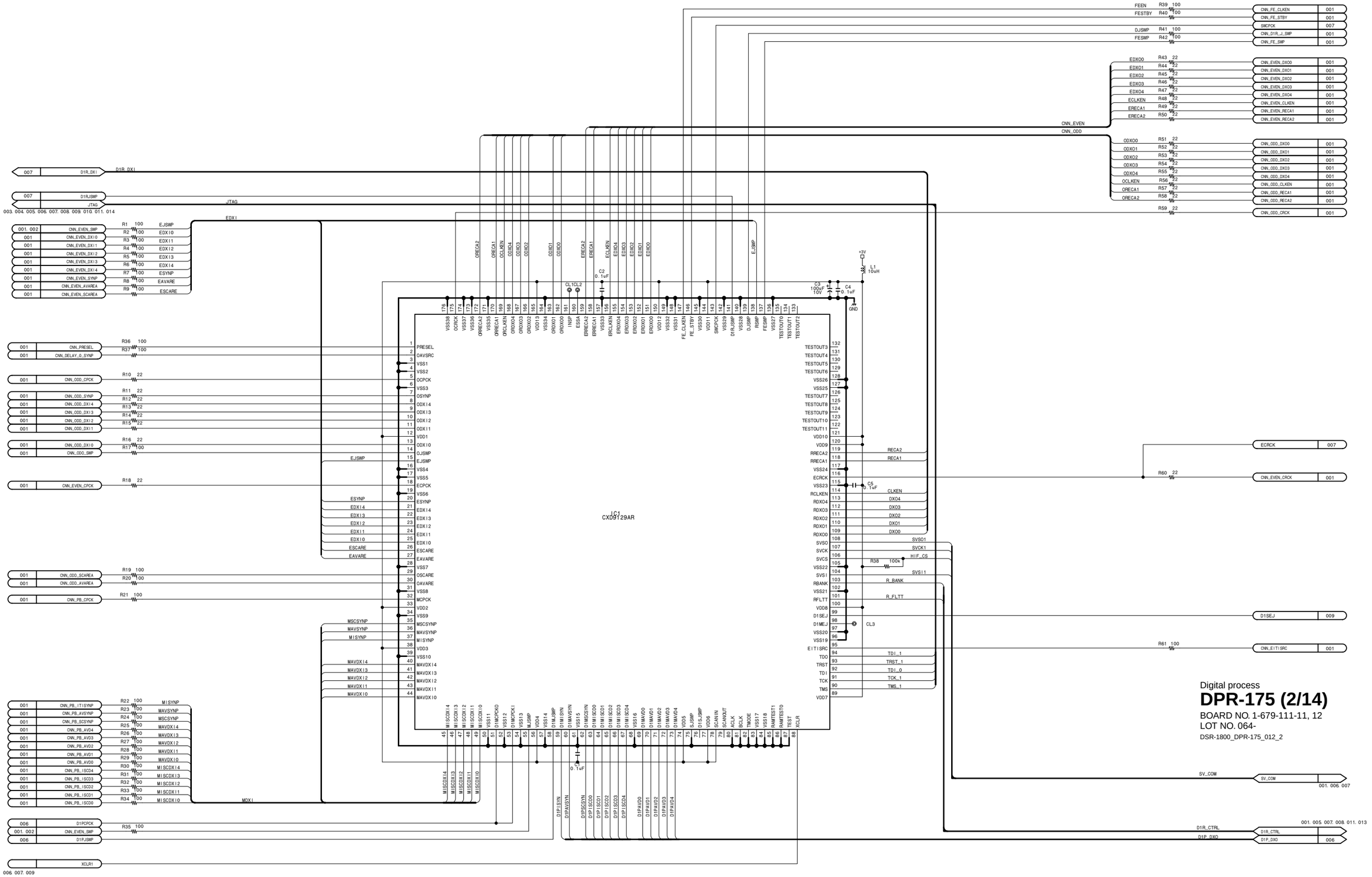

15-6

DPR-175 (3/14)

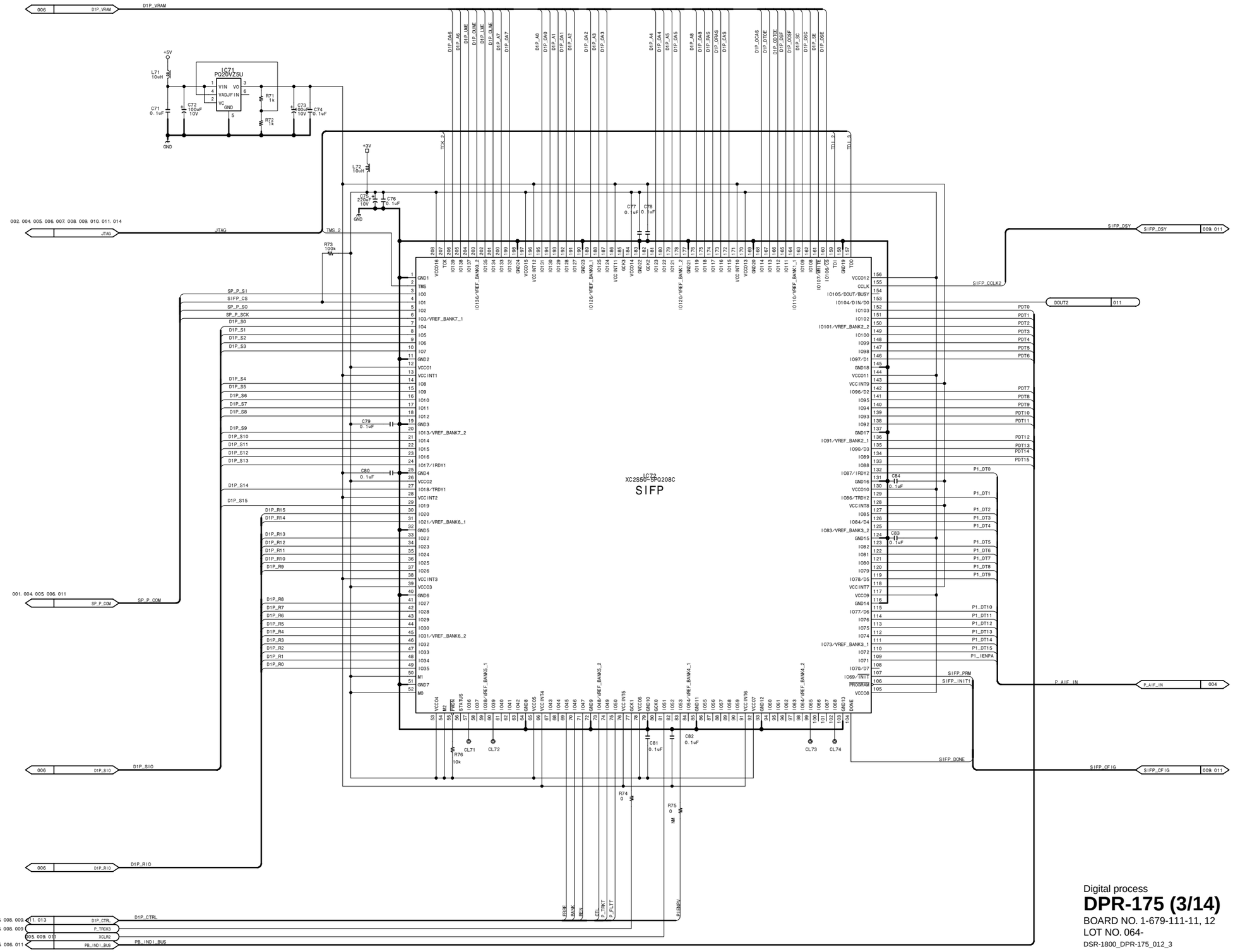

Digital process

DPR-175 (3/14)

BOARD NO. 1-679-111-11, 12
LOT NO. 064-
DSR-1800_DPR-175_012_3

http://getMANUAL.com

 DPR-175 (4/14)

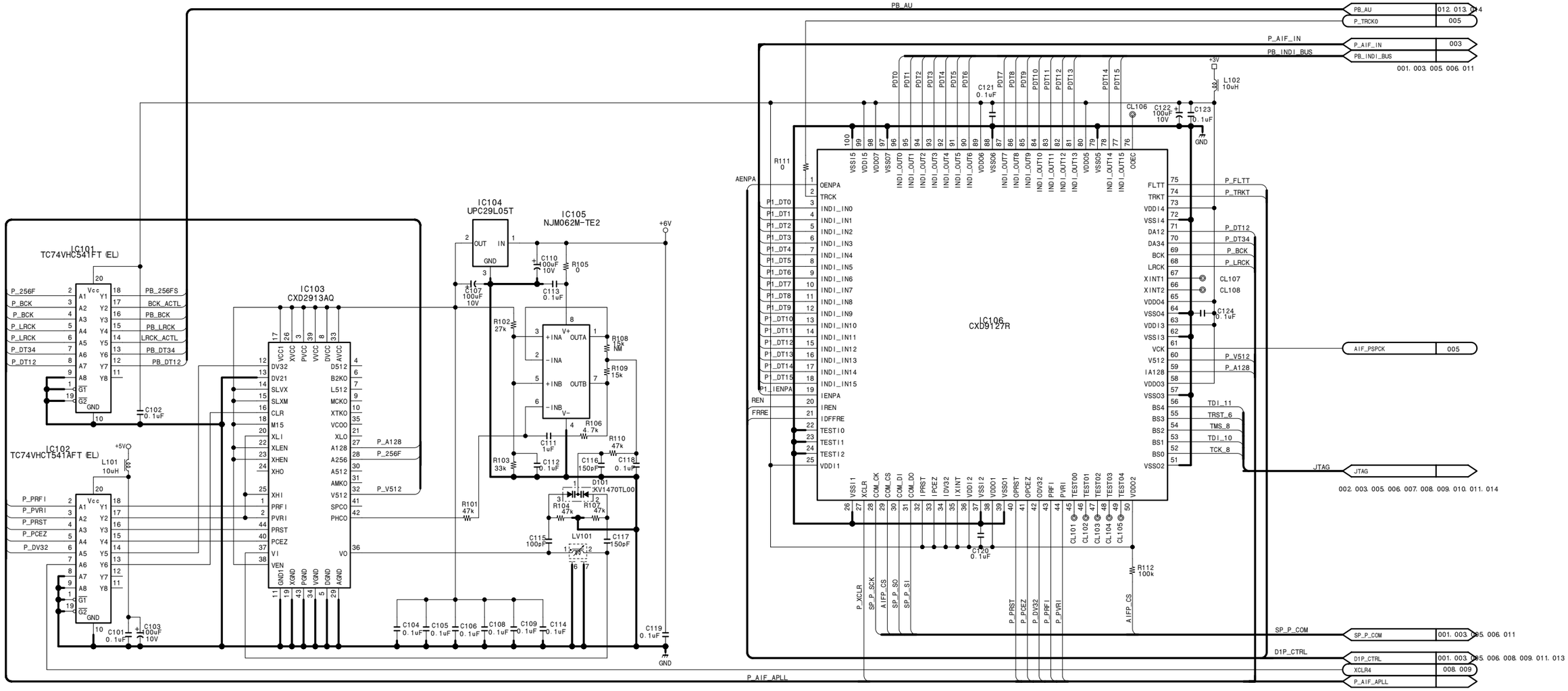

Digital process

DPR-175 (4/14)

BOARD NO. 1-679-111-11, 12

LOT NO. 064-

DSR-1800_DPR-175_012_4

DPR-175 (5/14)

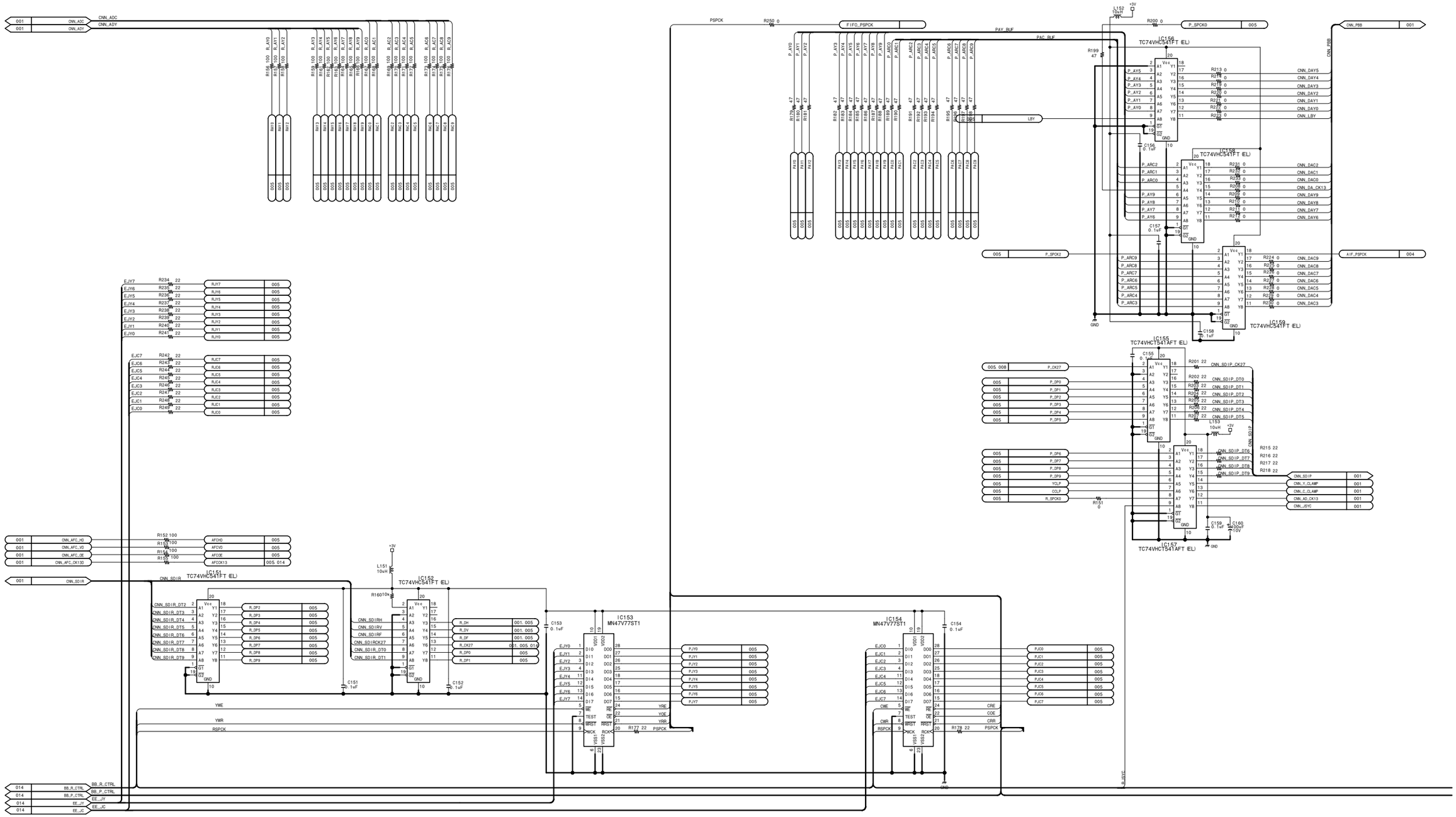

15-10

DPR-175 (5/14)

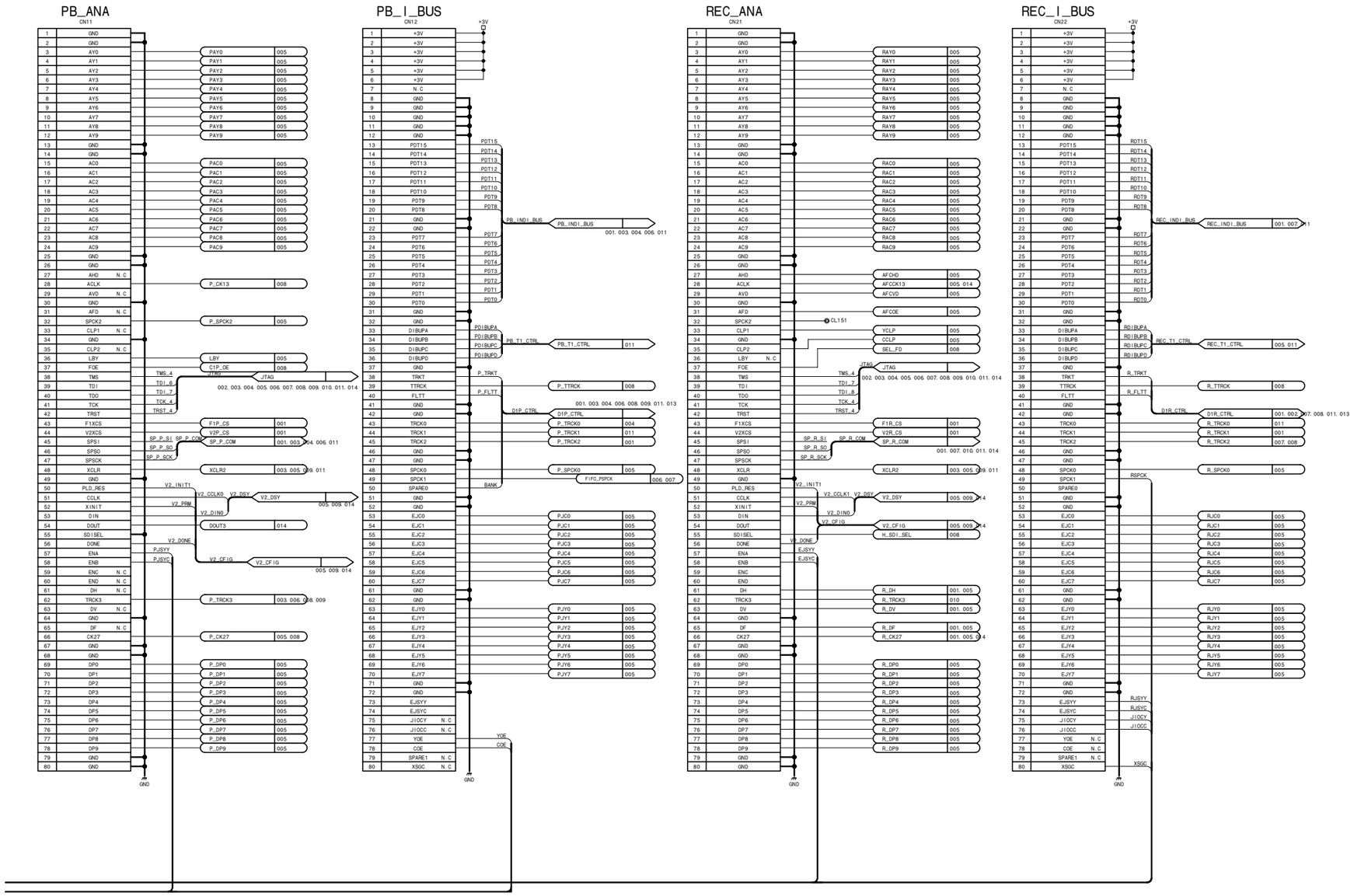

Digital process
DPR-175 (5/14)
BOARD NO. 1-679-111-11, 12
LOT NO. 064-
DSR-1800_DPR-175_012_5

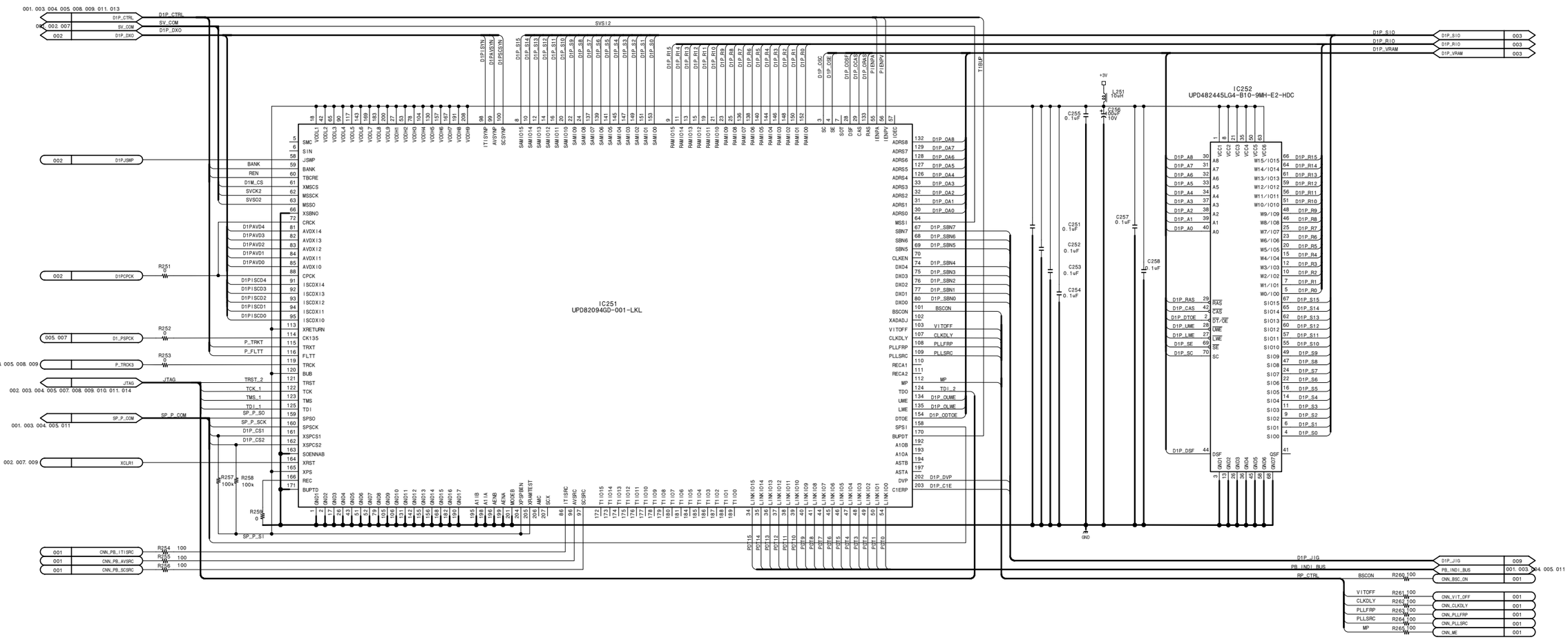

Digital process

DPR-175 (6/14)

BOARD NO. 1-679-111-11, 12
LOT NO. 064-
DSR-1800_DPR-175_012_6

DPR-175 (7/14)

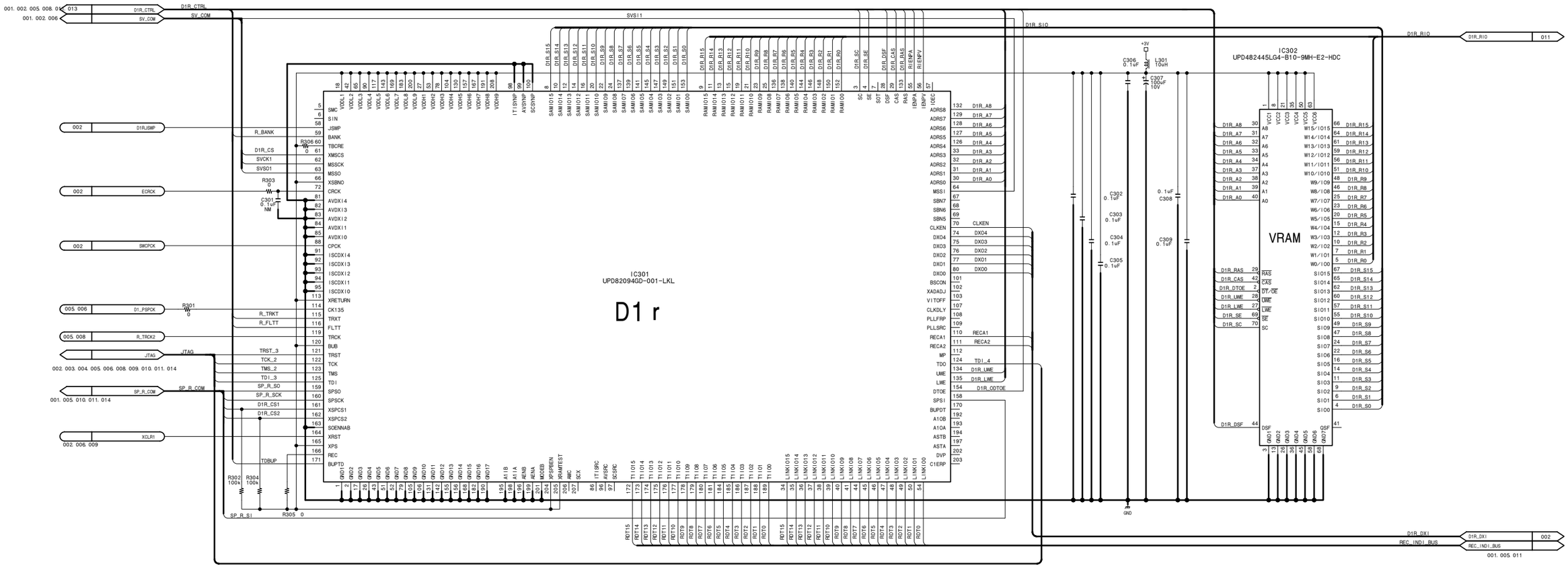

Digital process

DPR-175 (7/14)

BOARD NO. 1-679-111-11, 12
LOT NO. 064-
DSR-1800_DPR-175_012_7

DPR-175 (8/14)

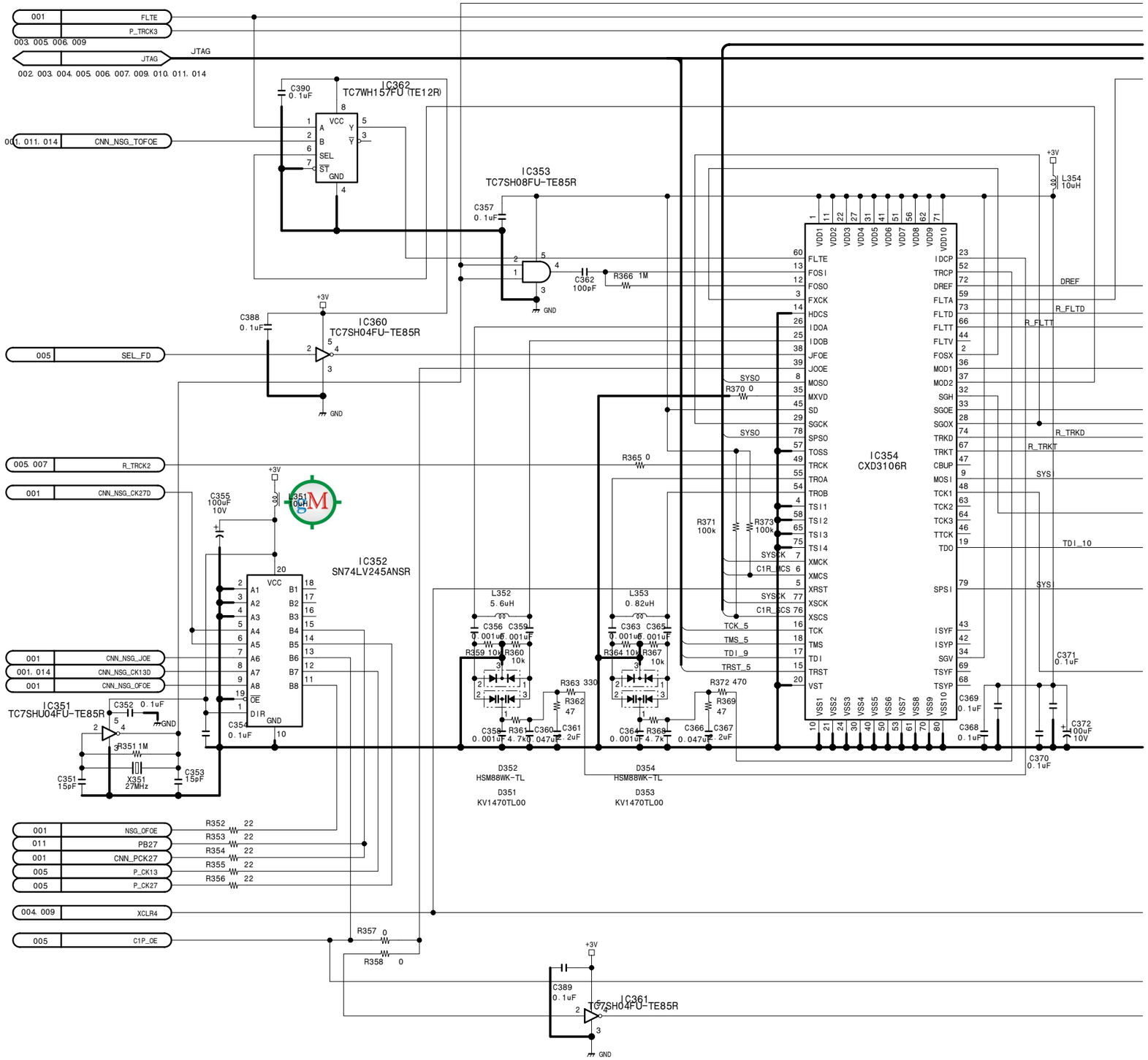

15-14

DPR-175 (8/14)

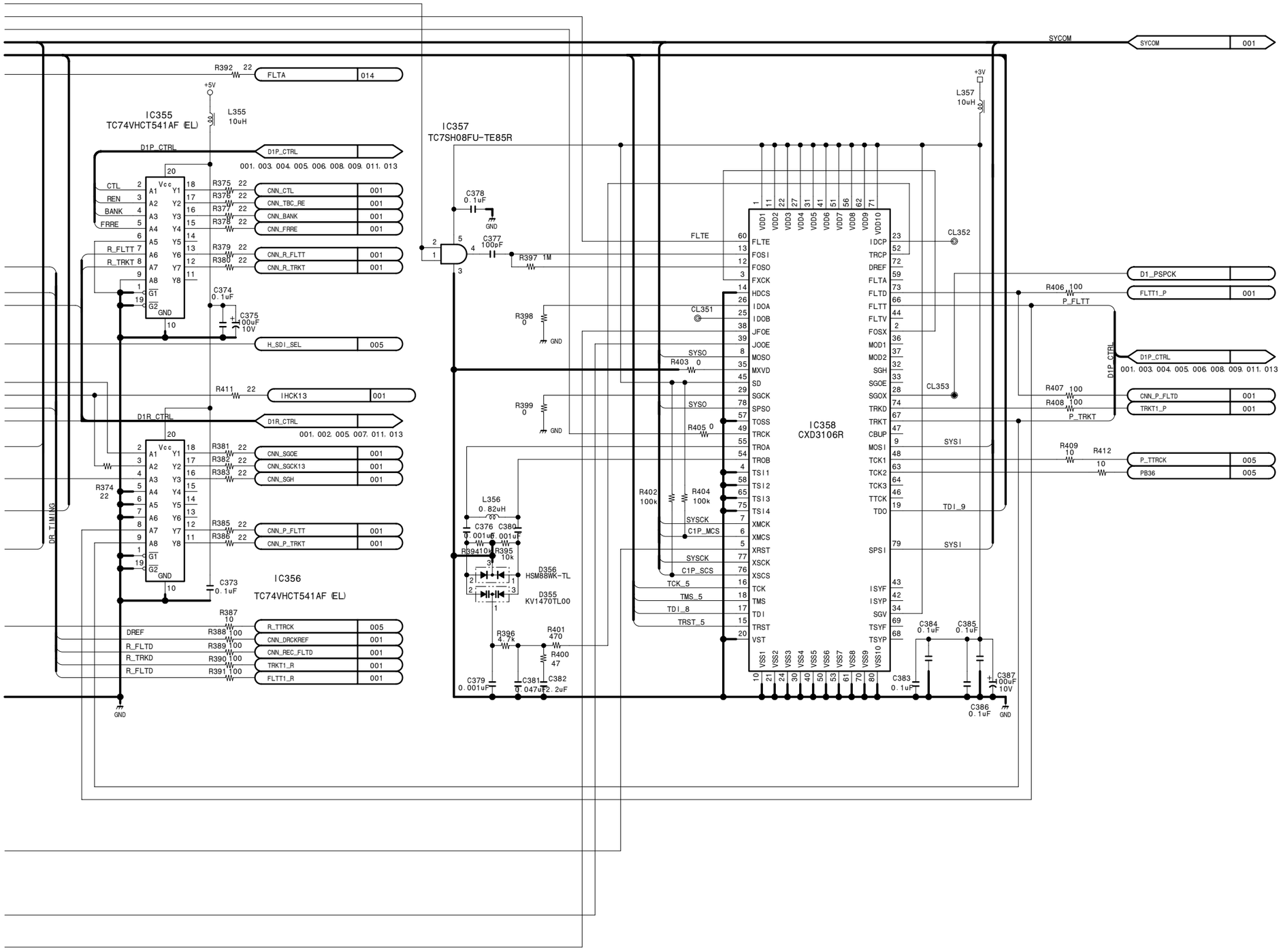

Digital process
DPR-175 (8/14)
BOARD NO. 1-679-111-11, 12
LOT NO. 064-
DSR-1800_DPR-175_012_8

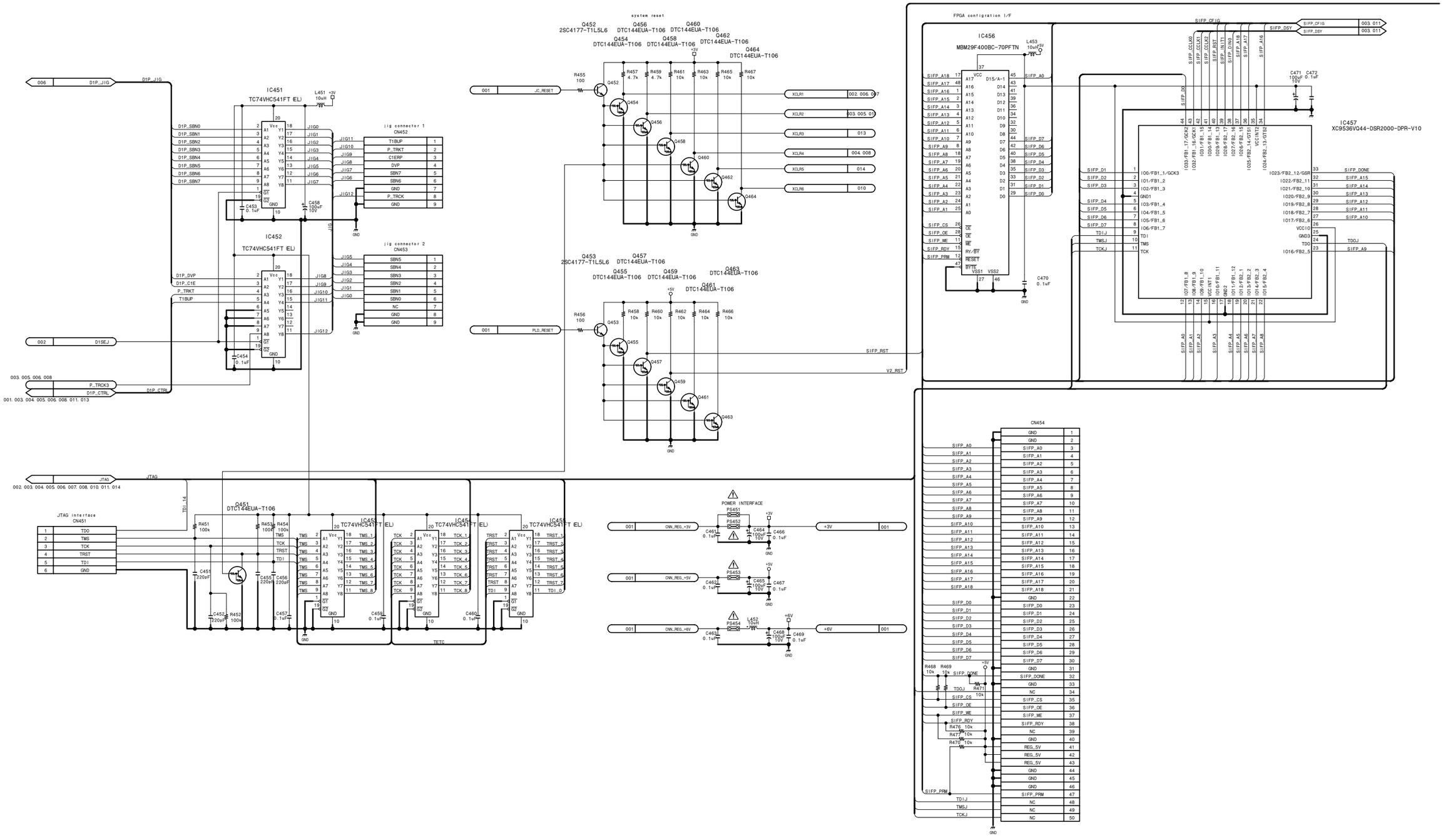
IC451
TC74VHC541FT (EL)
IC452
TC74VHC541FT (EL)
jig connector 1
CN452
jig connector 2
CN453
system reset
Q452 2SC4177-T1L5L6
Q456 DTC144EUA-T106
Q460 DTC144EUA-T106
Q454 DTC144EUA-T106
Q458 DTC144EUA-T106
Q462 DTC144EUA-T106
Q464 DTC144EUA-T106
Q453 2SC4177-T1L5L6
Q457 DTC144EUA-T106
Q455 DTC144EUA-T106
Q459 DTC144EUA-T106
Q463 DTC144EUA-T106
Q461 DTC144EUA-T106
FPGA configration I/F
IC456
MBM29F400BC-70PFTN
IC457
XC9536VQ44-DSR2000-DPR-V10
CN454
JTAG interface
CN451
IC453
TC74VHC541FT (EL)
IC454
TC74VHC541FT (EL)
IC455
TC74VHC541FT (EL)
Q451 DTC144EUA-T106
POWER INTERFACE
PS451
PS452
PS453
PS454
D1P_JIG
D1P_SBN0
D1P_SBN1
D1P_SBN2
D1P_SBN3
D1P_SBN4
D1P_SBN5
D1P_SBN6
D1P_SBN7
D1P_DVP
D1P_C1E
P_TRKT
T1BUP
D1SEJ
P_TRCK3
D1P_CTRL
JC_RESET
PLD_RESET
SIFP_RST
V2_RST
JTAG
TETC
CNN_REG_+3V
CNN_REG_+5V
CNN_REG_+6V
+3V
+5V
+6V
SIFP_CFIG
SIFP_DSY
SIFP_DONE
SIFP_PRM
TDOJ
TMSJ
TCKJ

DPR-175 (9/14)

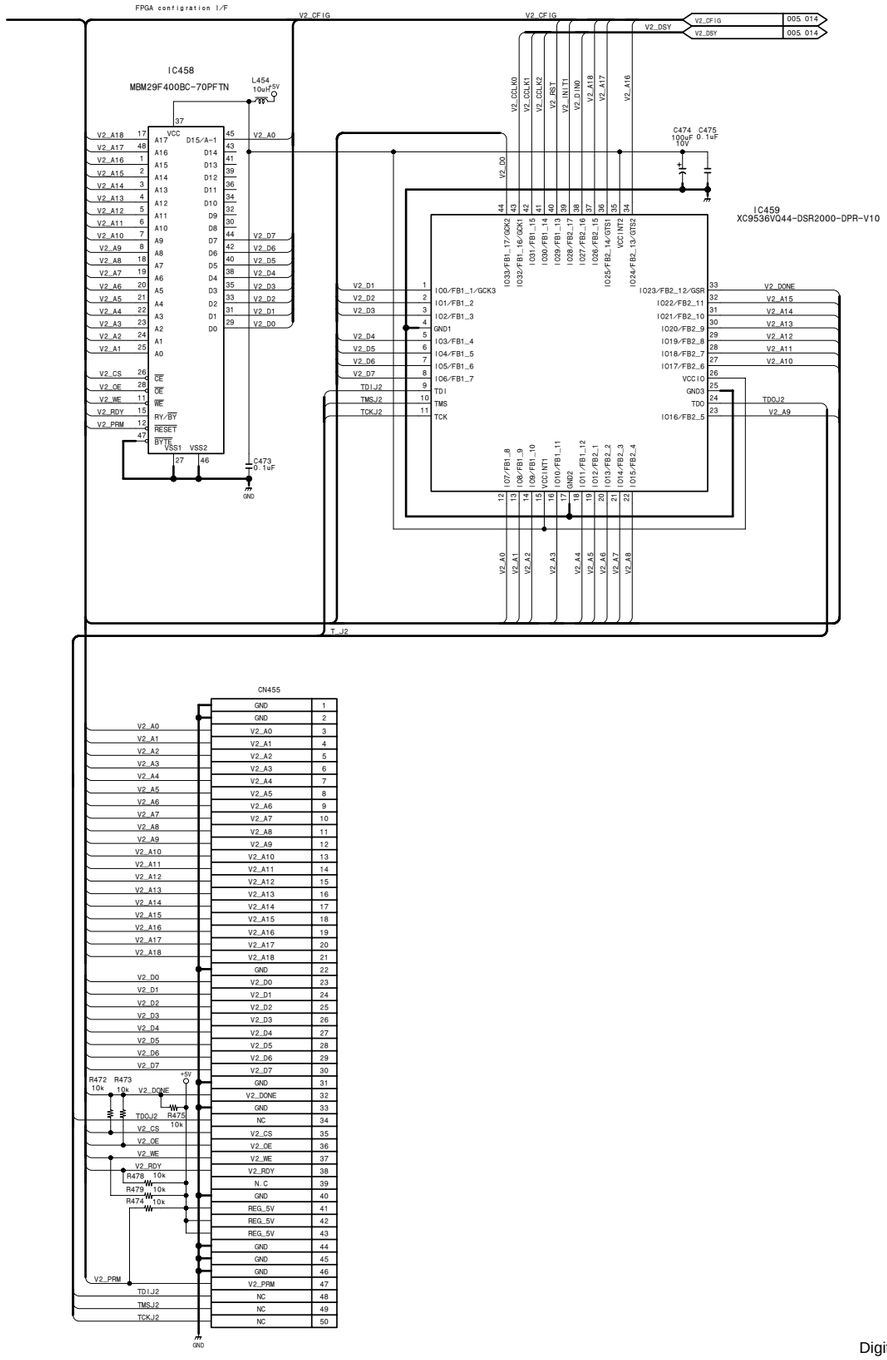

Digital process

DPR-175 (9/14)

BOARD NO. 1-679-111-11, 12
LOT NO. 064-

DSR-1800_DPR-175_012_9

15-17

http://getMANUAL.com

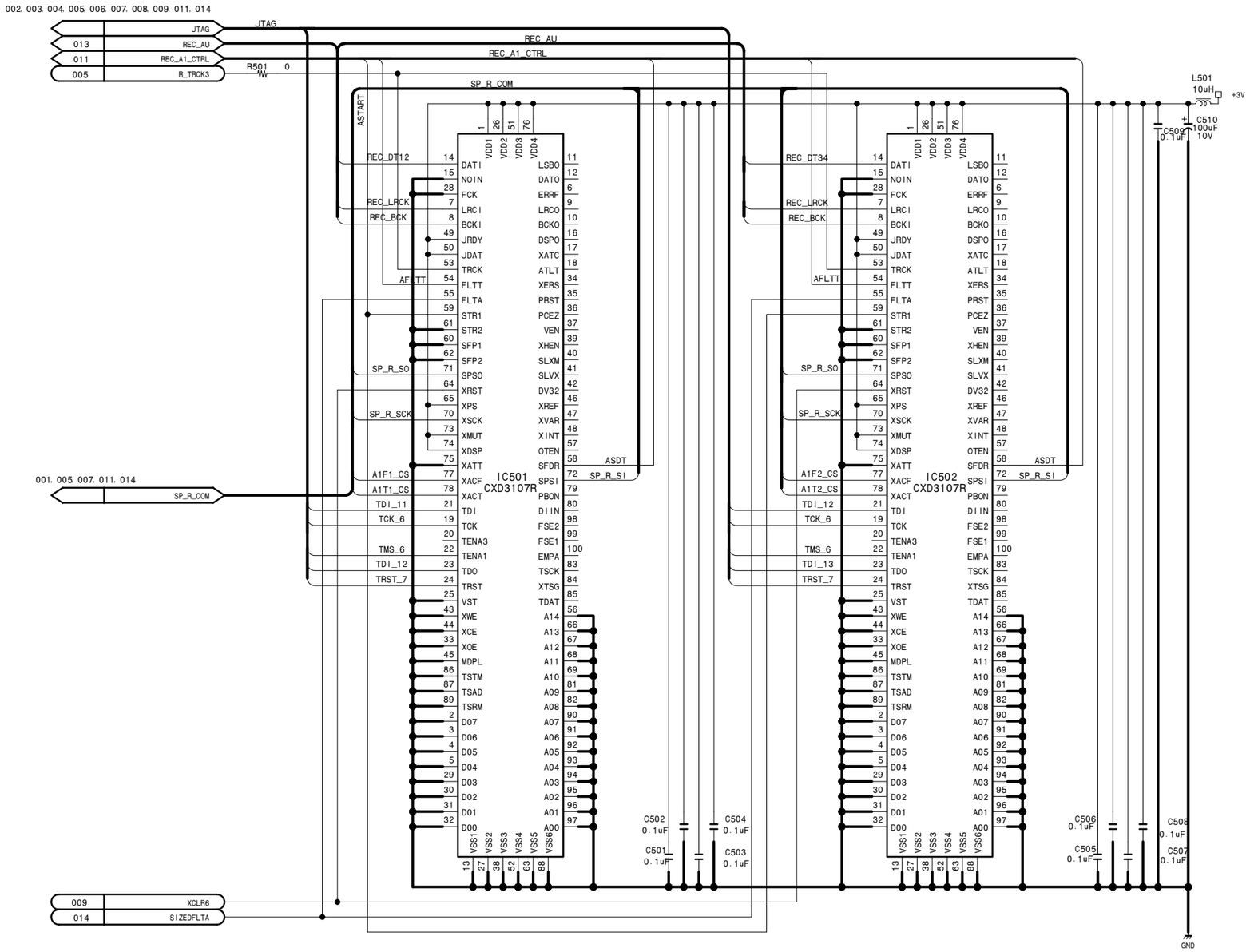

Digital process

DPR-175 (10/14)

BOARD NO. 1-679-111-11, 12
LOT NO. 064-
DSR-1800_DPR-175_012_10

DPR-175 (11/14)

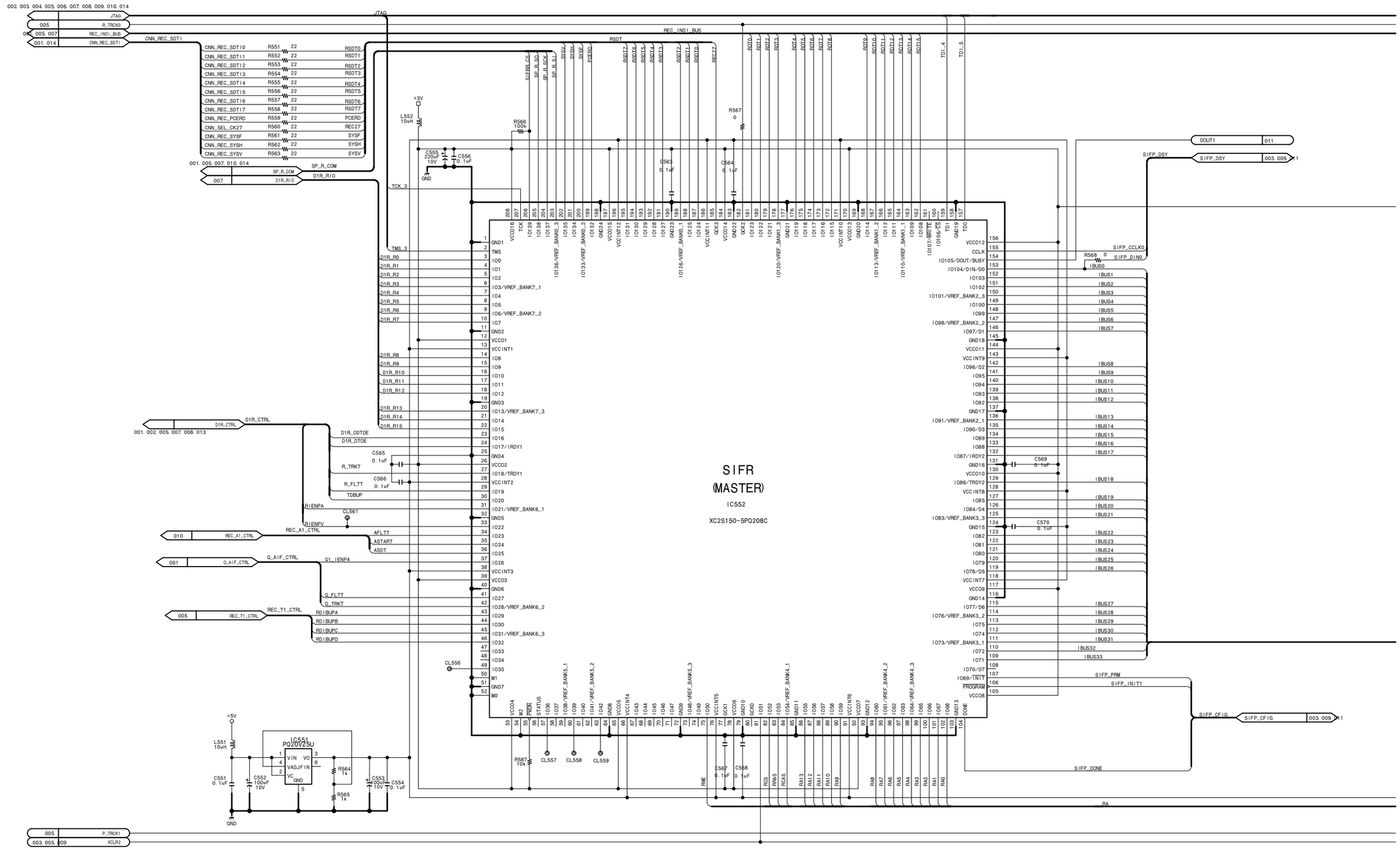
SIFR
(MASTER)
IC552
XC2S150-5PQ208C
IC551
PQ20V25U
JTAG
REC_IND1_BUS
RSDT
SIFP_DSY
SIFP_CFIG
SIFP_DONE
SIFP_PRM
SIFP_INIT1
SIFP_CCLK0
SIFP_DIN0
IBUS0
IBUS1
IBUS2
IBUS3
IBUS4
IBUS5
IBUS6
IBUS7
IBUS8
IBUS9
IBUS10
IBUS11
IBUS12
IBUS13
IBUS14
IBUS15
IBUS16
IBUS17
IBUS18
IBUS19
IBUS20
IBUS21
IBUS22
IBUS23
IBUS24
IBUS25
IBUS26
IBUS27
IBUS28
IBUS29
IBUS30
IBUS31
IBUS32
IBUS33
D1R_R0
D1R_R1
D1R_R2
D1R_R3
D1R_R4
D1R_R5
D1R_R6
D1R_R7
D1R_R8
D1R_R9
D1R_R10
D1R_R11
D1R_R12
D1R_R13
D1R_R14
D1R_R15
D1R_CTRL
D1R_ODTOE
D1R_DTOE
R_TRKT
R_FLTT
TDBUP
R1ENPA
R1ENPV
REC_A1_CTRL
AFLTT
ASTART
ASDT
Q_AIF_CTRL
Q1_IENPA
Q_FLTT
Q_TRKT
REC_T1_CTRL
R01BUPA
R01BUPB
R01BUPC
R01BUPD
SP_R_COM
D1R_R1O
CNN_REC_SDTI
JTAG
R_TRCK0
REC_IND1_BUS
CNN_REC_SDTI
SP_R_COM
D1R_R1O
P_TRCK1
XCLR2
RA
+3V
+5V
GND

DPR-175 (11/14)

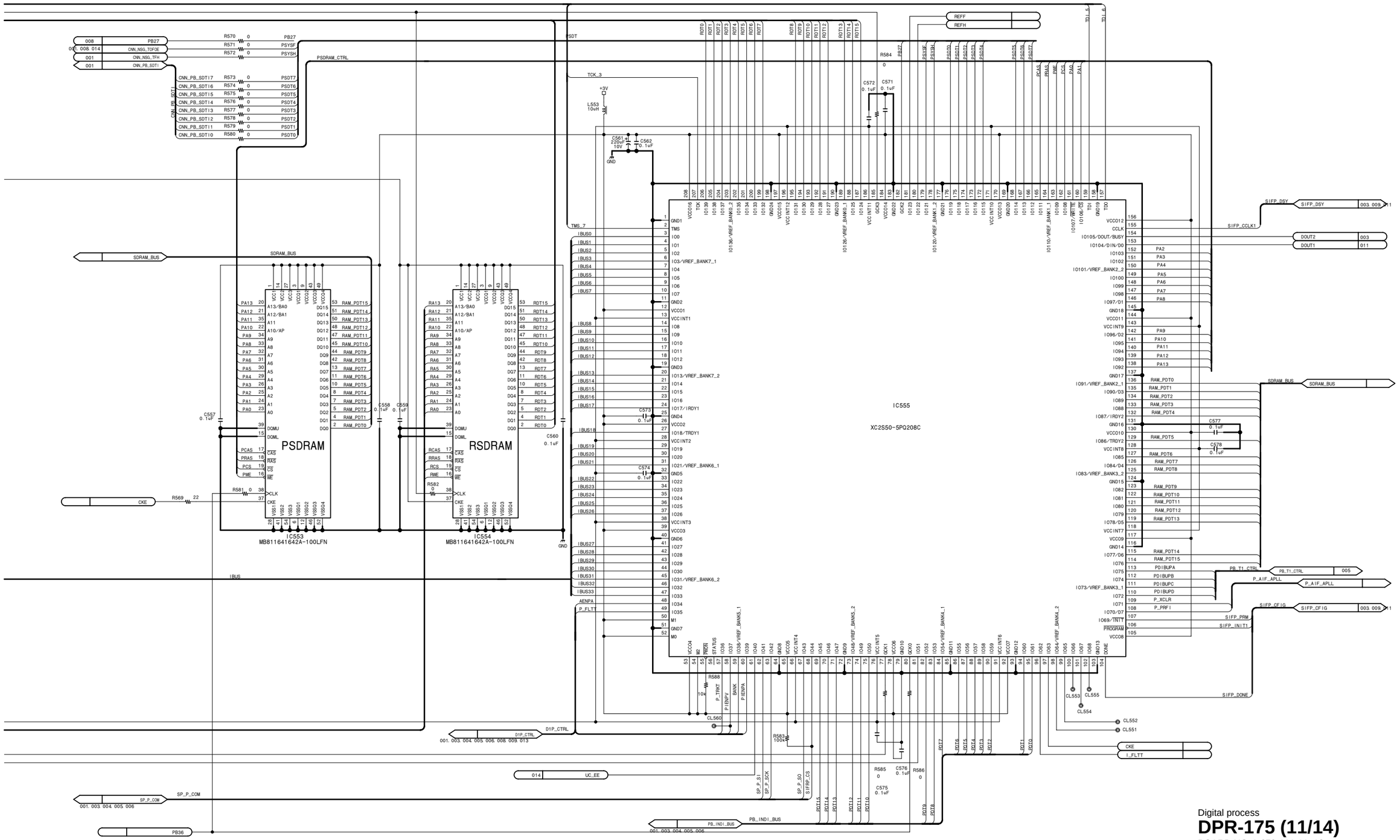

Digital process

DPR-175 (11/14)

BOARD NO. 1-679-111-11, 12
LOT NO. 064-

DSR-1800_DPR-175_012_11

DPR-175 (12/14)

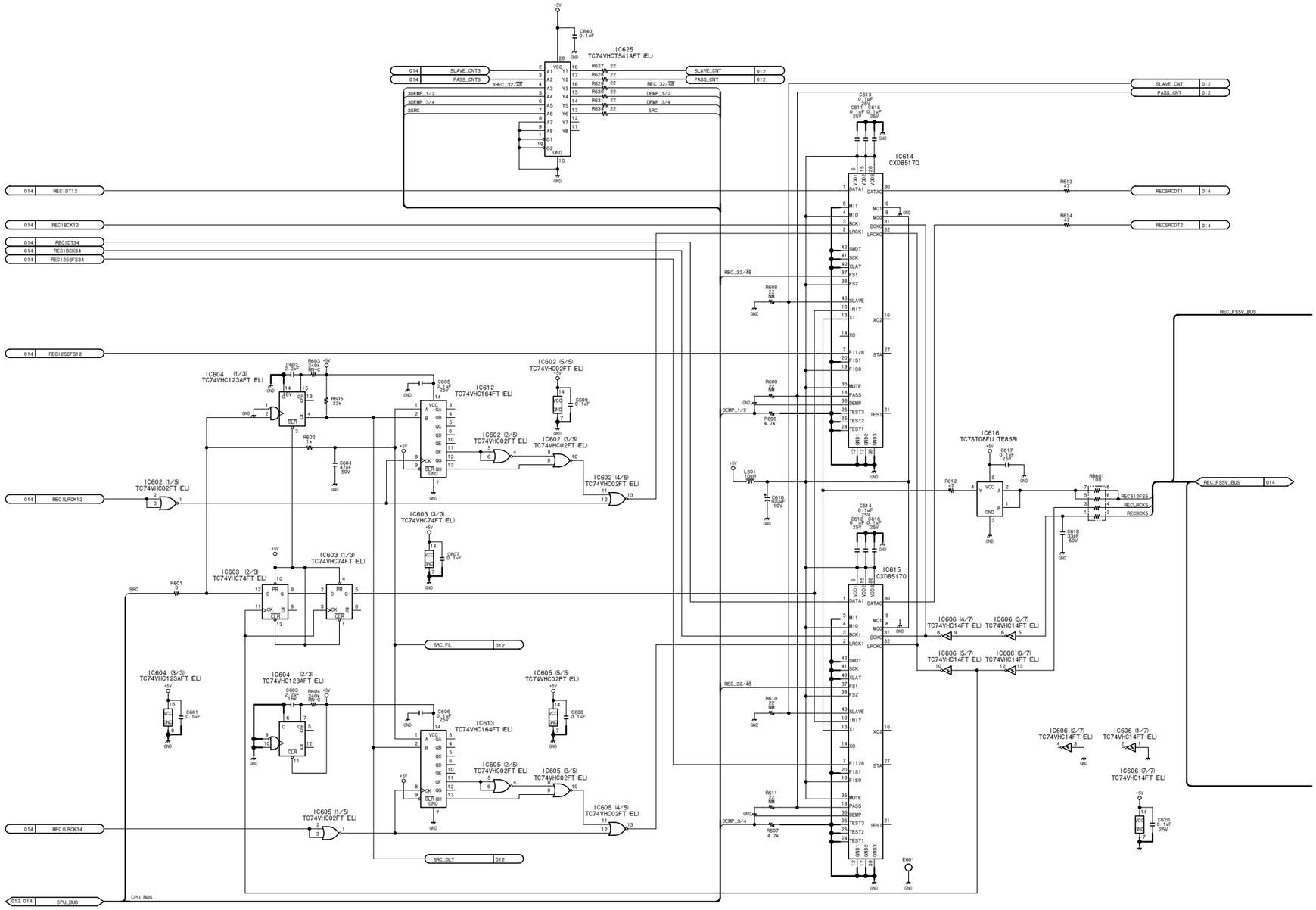
IC625
TC74VHCT541AFT (EL)
IC614
CXD8517Q
IC615
CXD8517Q
IC616
TC7ST08FU (TE85R)
IC604 (1/3)
TC74VHC123AFT (EL)
IC604 (2/3)
TC74VHC123AFT (EL)
IC604 (3/3)
TC74VHC123AFT (EL)
IC612
TC74VHC164FT (EL)
IC613
TC74VHC164FT (EL)
IC602 (1/5)
TC74VHC02FT (EL)
IC602 (2/5)
TC74VHC02FT (EL)
IC602 (3/5)
TC74VHC02FT (EL)
IC602 (4/5)
TC74VHC02FT (EL)
IC602 (5/5)
TC74VHC02FT (EL)
IC603 (1/3)
TC74VHC74FT (EL)
IC603 (2/3)
TC74VHC74FT (EL)
IC603 (3/3)
TC74VHC74FT (EL)
IC605 (1/5)
TC74VHC02FT (EL)
IC605 (2/5)
TC74VHC02FT (EL)
IC605 (3/5)
TC74VHC02FT (EL)
IC605 (4/5)
TC74VHC02FT (EL)
IC605 (5/5)
TC74VHC02FT (EL)
IC606 (1/7)
TC74VHC14FT (EL)
IC606 (2/7)
TC74VHC14FT (EL)
IC606 (3/7)
TC74VHC14FT (EL)
IC606 (4/7)
TC74VHC14FT (EL)
IC606 (5/7)
TC74VHC14FT (EL)
IC606 (6/7)
TC74VHC14FT (EL)
IC606 (7/7)
TC74VHC14FT (EL)
REC_32/48
DEMP_1/2
DEMP_3/4
SRC
SLAVE_CNT
PASS_CNT
REC_FSSV_BUS
SRC_FL
SRC_DLY
CPU_BUS
REC1DT12
REC1BCK12
REC1DT34
REC1BCK34
REC1256FS34
REC1256FS12
REC1LRCK12
REC1LRCK34
RECSRCDT1
RECSRCDT2
RECSRCBCK
RECSRCLRCK
REC512FSS
RECLRCKS
RECBCKS

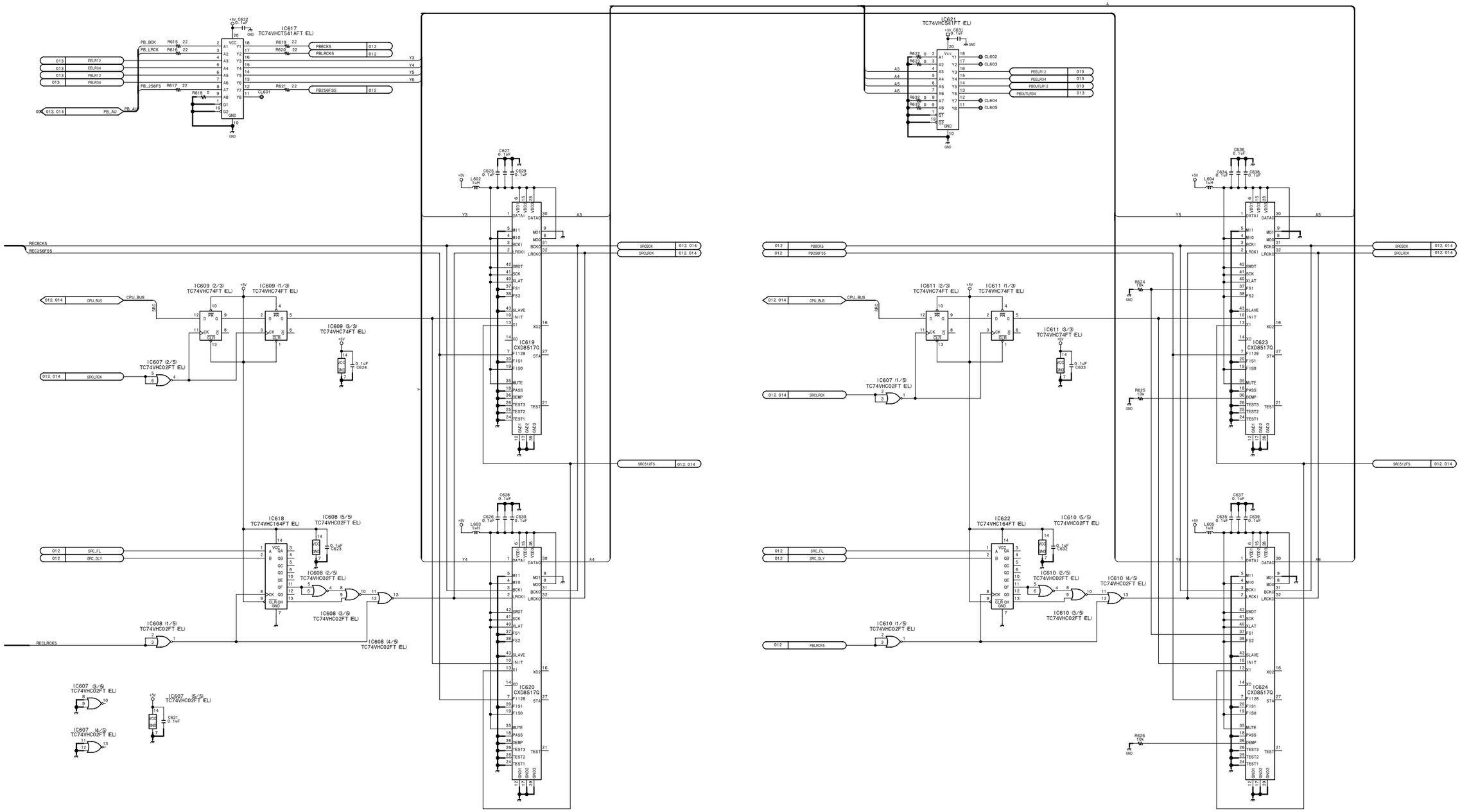

Digital process

DPR-175 (12/14)

BOARD NO. 1-679-111-11, 12

LOT NO. 064-

DSR-1800_DPR-175_012_12

DPR-175 (13/14)

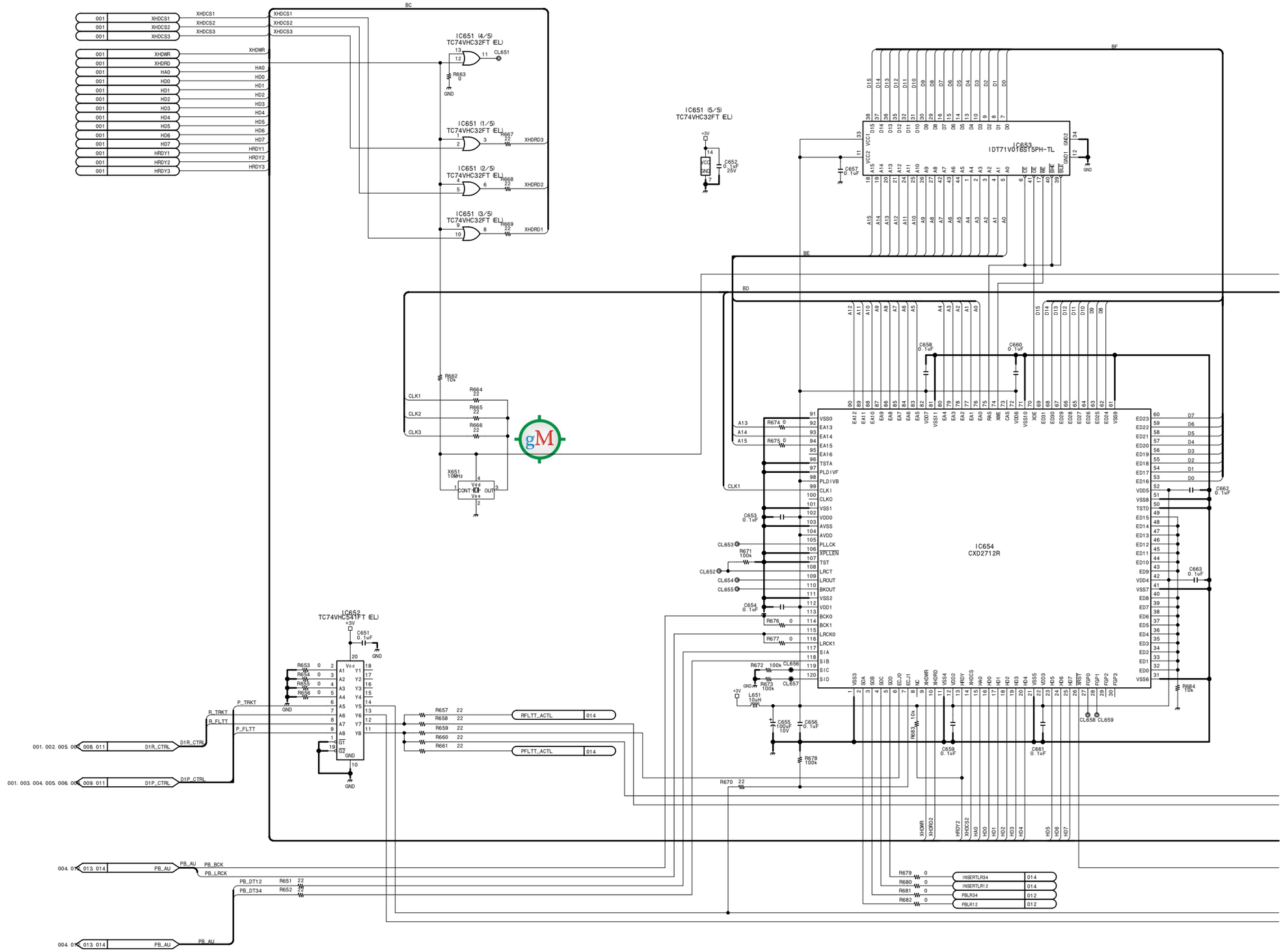

15-24

DPR-175 (13/14)

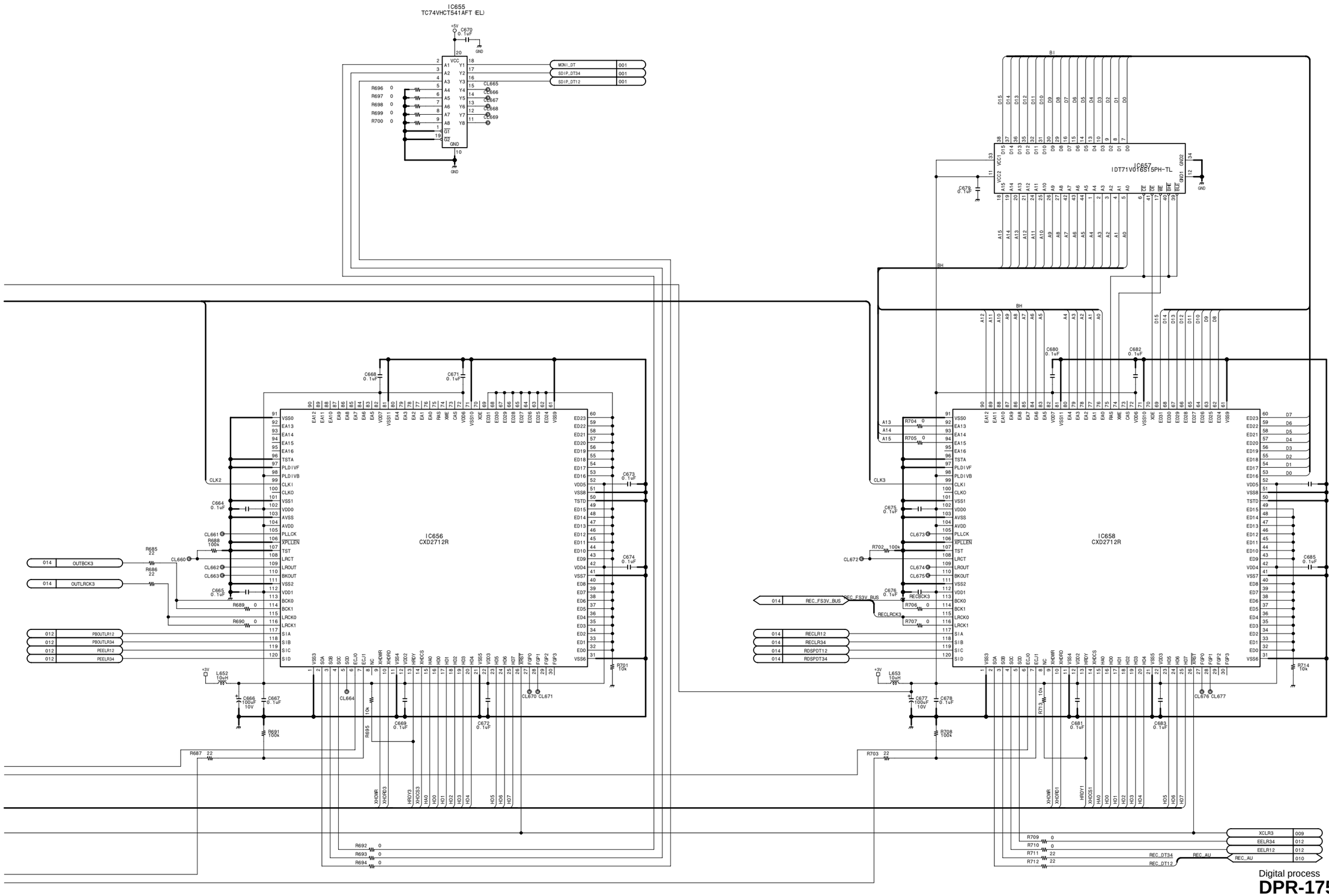

Digital process
DPR-175 (13/14)
BOARD NO. 1-679-111-11, 12
LOT NO. 064-
DSR-1800_DPR-175_012_13

DPR-175 (14/14)

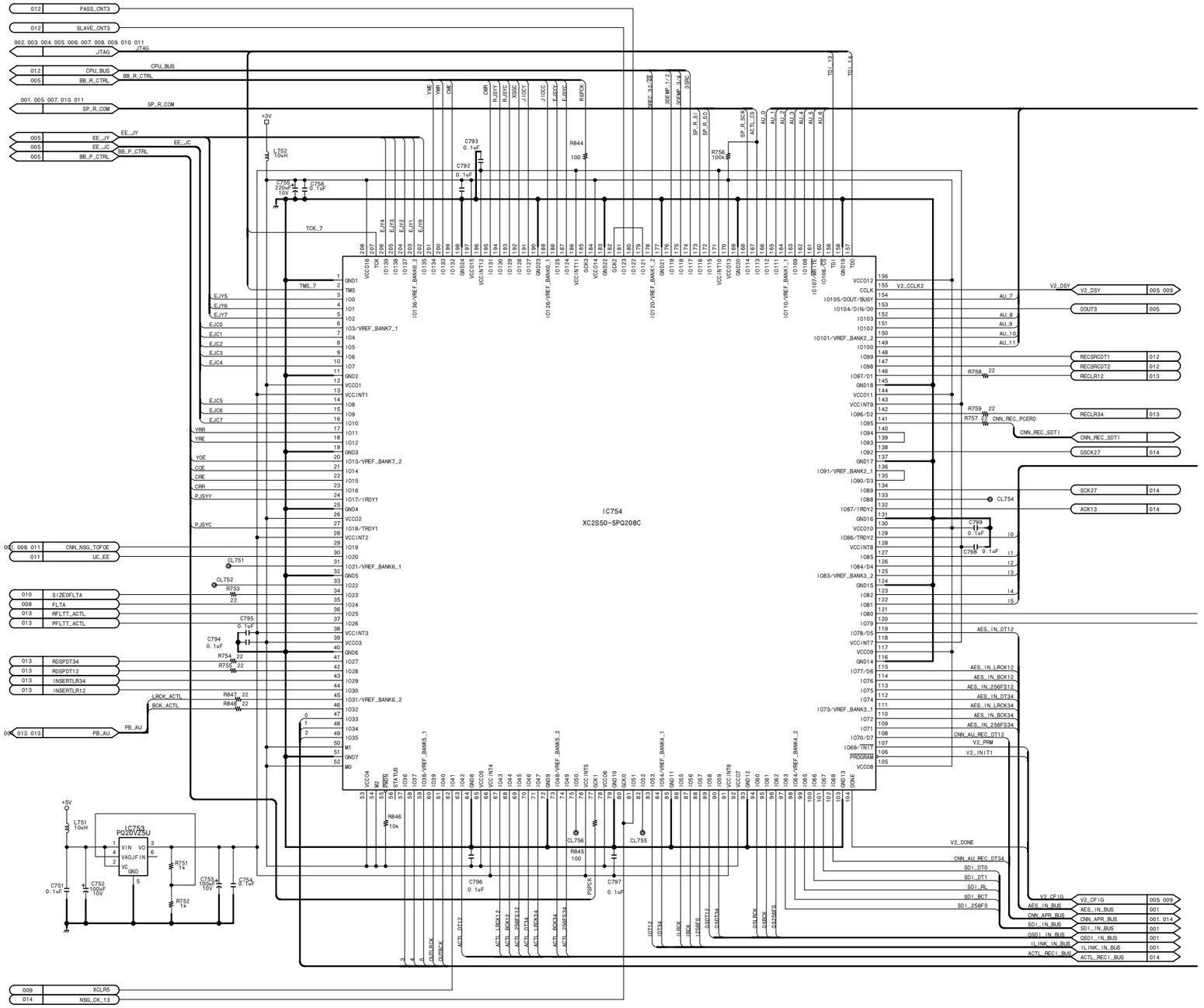
IC754
XC2S50-5PQ208C
IC753
PQ20V25U
012 PASS_CNT3
012 SLAVE_CNT3
002. 003. 004. 005. 006. 007. 008. 009. 010. 011 JTAG
012 CPU_BUS
005 BB_R_CTRL
001. 005. 007. 010. 011 SP_R_COM
005 EE_JY
005 EE_JC
005 BB_P_CTRL
+3V
L752 10uH
C793 0.1uF
C792 0.1uF
C755 220uF 10V
C756 0.1uF
R844 100
R756 100k
TCK_7
TMS_7
EJY5
EJY6
EJY7
EJC0
EJC1
EJC2
EJC3
EJC4
EJC5
EJC6
EJC7
YRR
YRE
YOE
COE
CRE
CRR
PJSYY
PJSYC
CNN_NSG_TOFOE
UC_EE
CL751
CL752
R753 22
010 SIZEDFLTA
008 FLTA
013 RFLTT_ACTL
013 PFLTT_ACTL
C795 0.1uF
C794 0.1uF
R754 22
R755 22
013 RDSPDT34
013 RDSPDT12
013 INSERTLR34
013 INSERTLR12
R847 22
R848 22
LRCK_ACTL
BCK_ACTL
012. 013 PB_AU
PB_AU
009 XCLR5
014 NSG_CK_13
+5V
L751 10uH
C751 0.1uF
C752 100uF 10V
C753 100uF 10V
C754 0.1uF
R751 1k
R752 1k
VIN VO
VADJ FIN
VC GND
R846 10k
R845 100
C796 0.1uF
C797 0.1uF
CL755
CL756
P20CK
V2_CCLK2
V2_DSY
DOUT3
RECSRCDT1
RECSRCDT2
RECLR12
R758 22
R759 22
R757 22
CNN_REC_PCERD
CNN_REC_SDTI
RECLR34
QSCK27
SCK27
ACK13
CL754
C799 0.1uF
C798 0.1uF
AES_IN_DT12
AES_IN_LRCK12
AES_IN_BCK12
AES_IN_256FS12
AES_IN_DT34
AES_IN_LRCK34
AES_IN_BCK34
AES_IN_256FS34
CNN_AU_REC_DT12
V2_PRM
V2_INIT1
V2_DONE
CNN_AU_REC_DT34
SDI_DT0
SDI_DT1
SDI_PL
SDI_BCT
SDI_256FS
V2_CFIG
AES_IN_BUS
CNN_APR_BUS
SDI_IN_BUS
QSDI_IN_BUS
ILINK_IN_BUS
ACTL_REC1_BUS
005. 009
001
001. 014
014

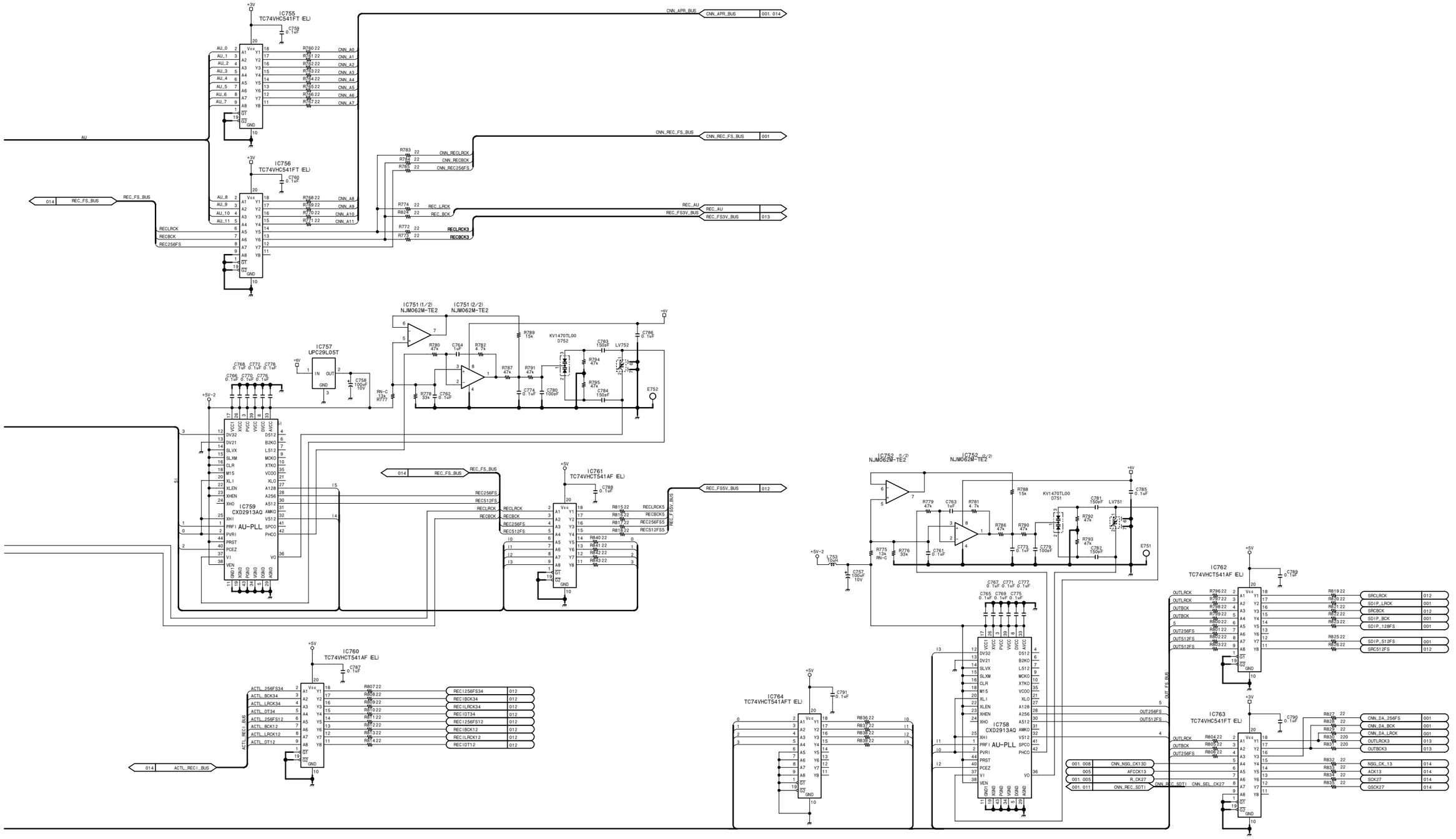

Digital process

DPR-175 (14/14)

BOARD NO. 1-679-111-11, 12

LOT NO. 064-

DSR-1800_DPR-175_012_14

 DR-428 (1/5)

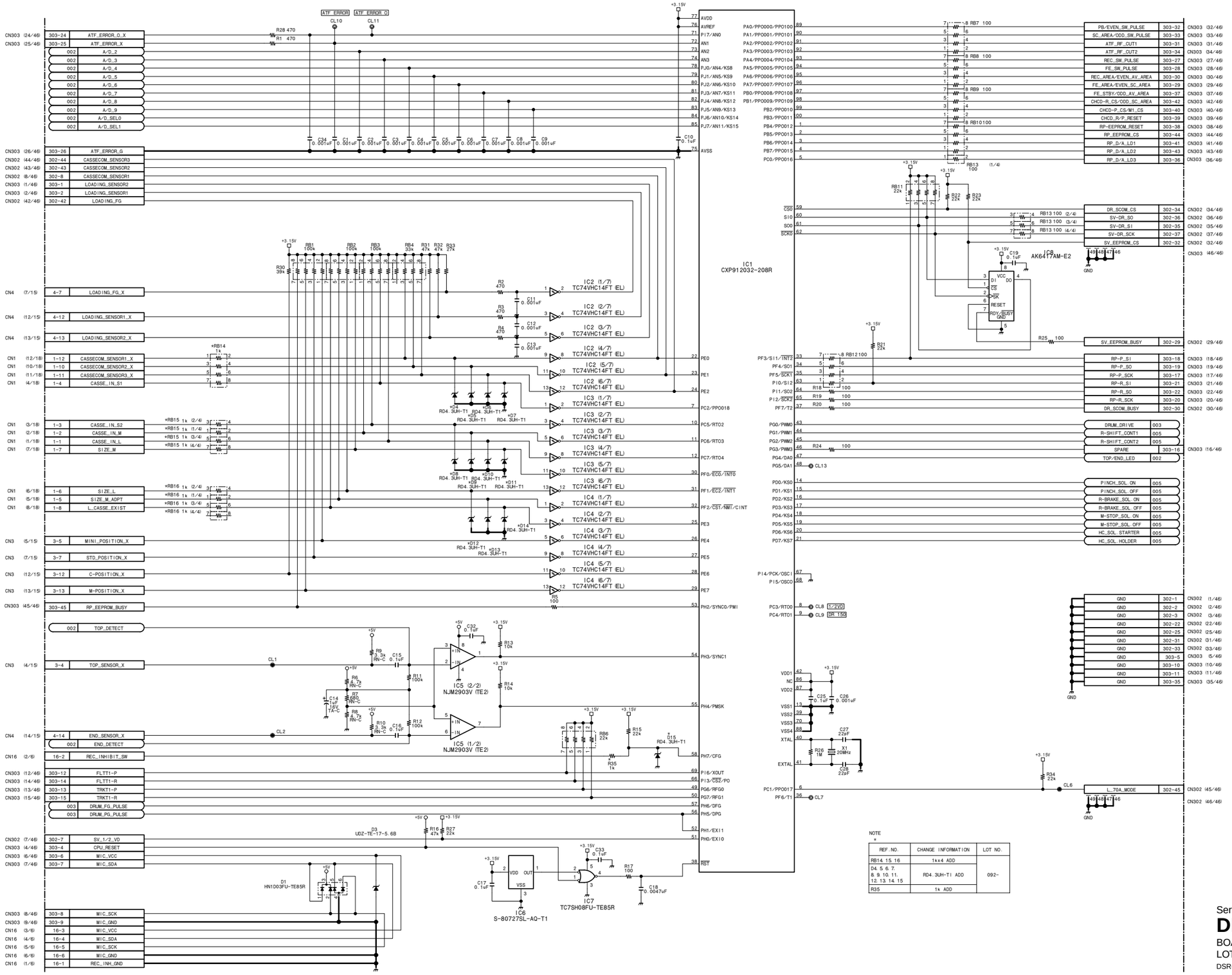

Servo/mechanism control

DR-428 (1/5)

BOARD NO. 1-679-112-12, 13
LOT NO. 064-

DSR-1800_DR-428_013_1

http://getMANUAL.com

DR-428 (2/5)

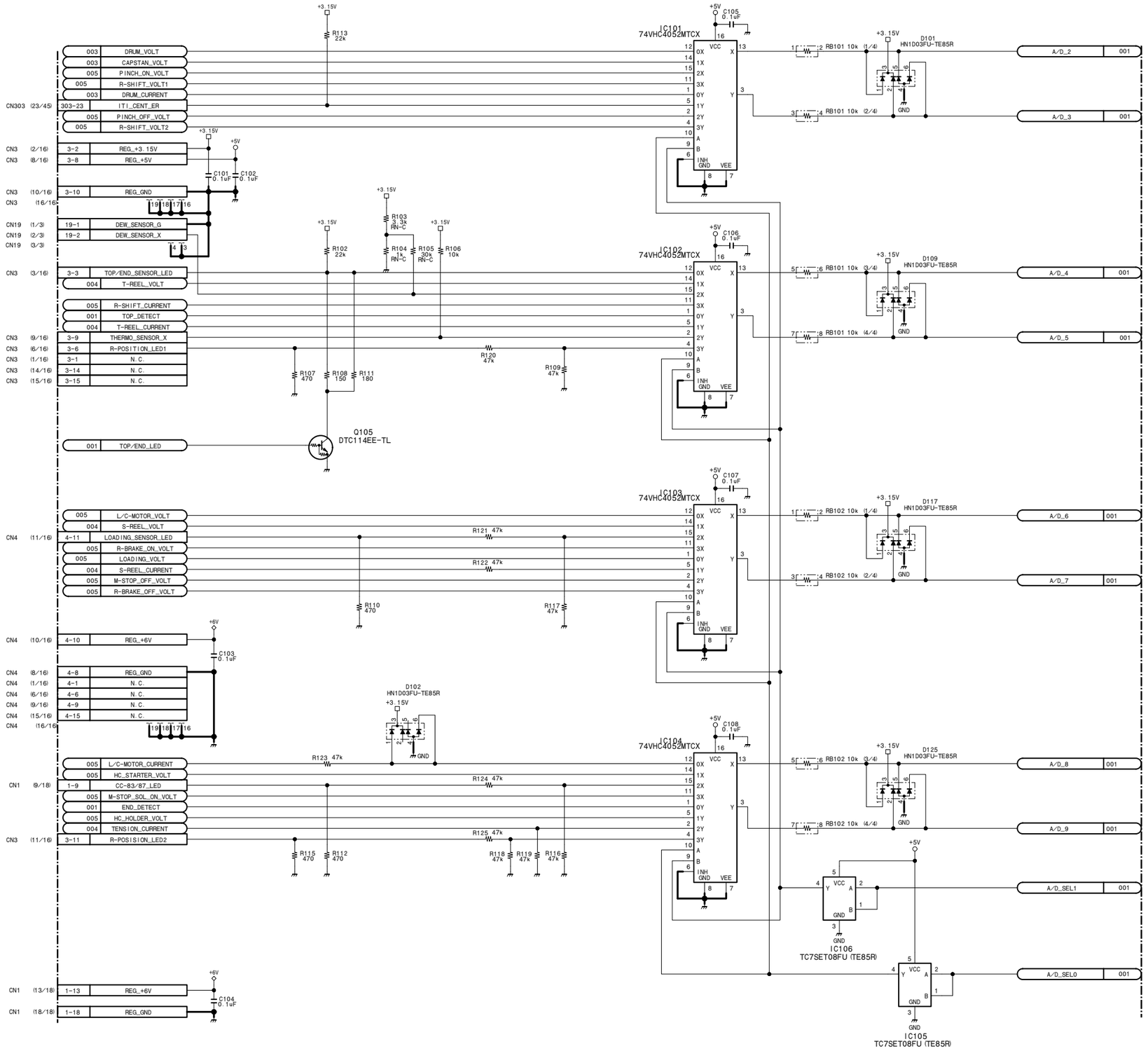

Servo/mechanism control

DR-428 (2/5)

BOARD NO. 1-679-112-12, 13
LOT NO. 064-

DSR-1800_DR-428_013_2

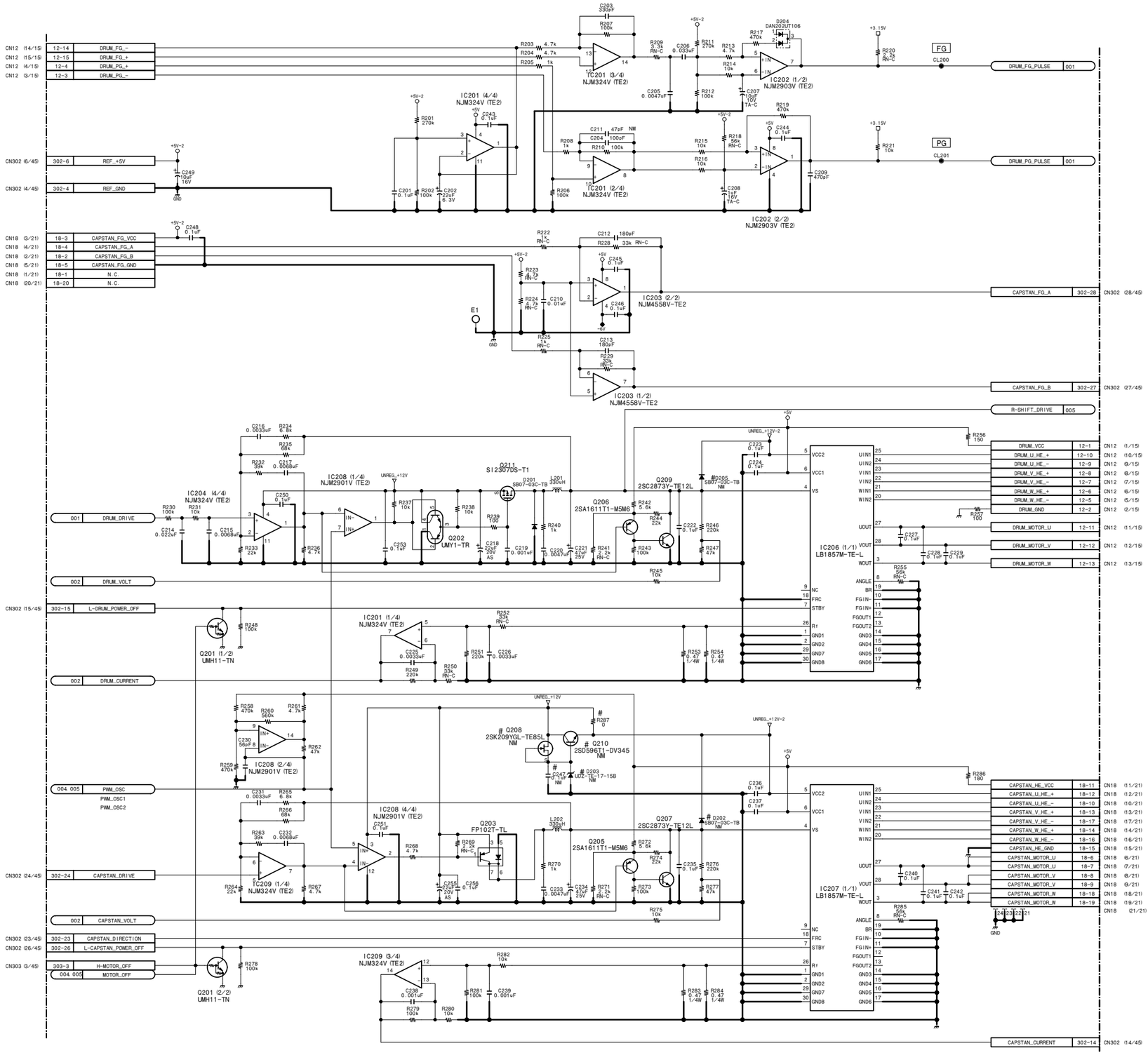

Servo/mechanism control

DR-428 (3/5)

BOARD NO. 1-679-112-12, 13

LOT NO. 064-

DSR-1800_DR-428_013_3

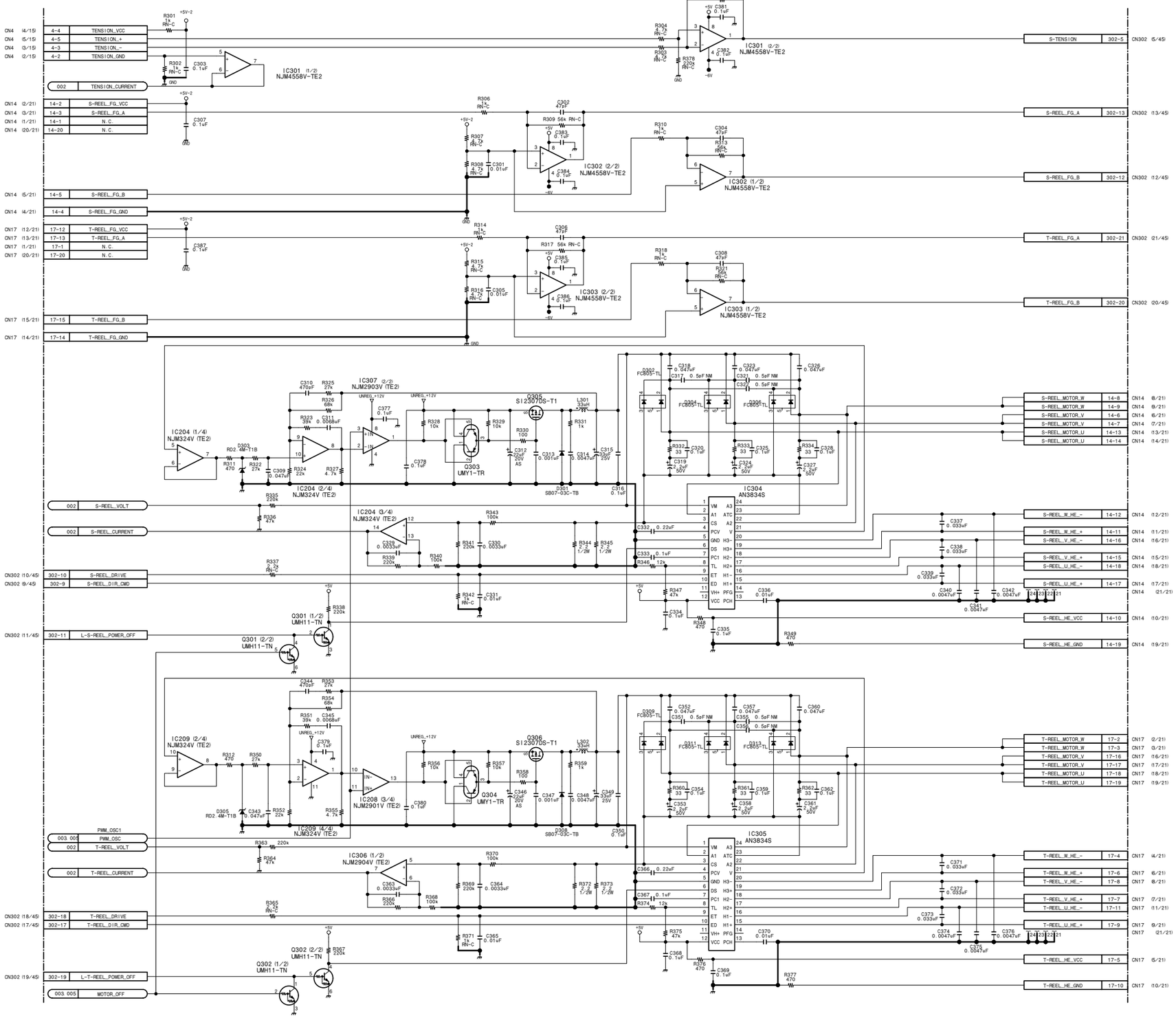

Servo/mechanism control

DR-428 (4/5)

BOARD NO. 1-679-112-12, 13
LOT NO. 064-
DSR-1800_DR-428_013_4

DR-428 (5/5)

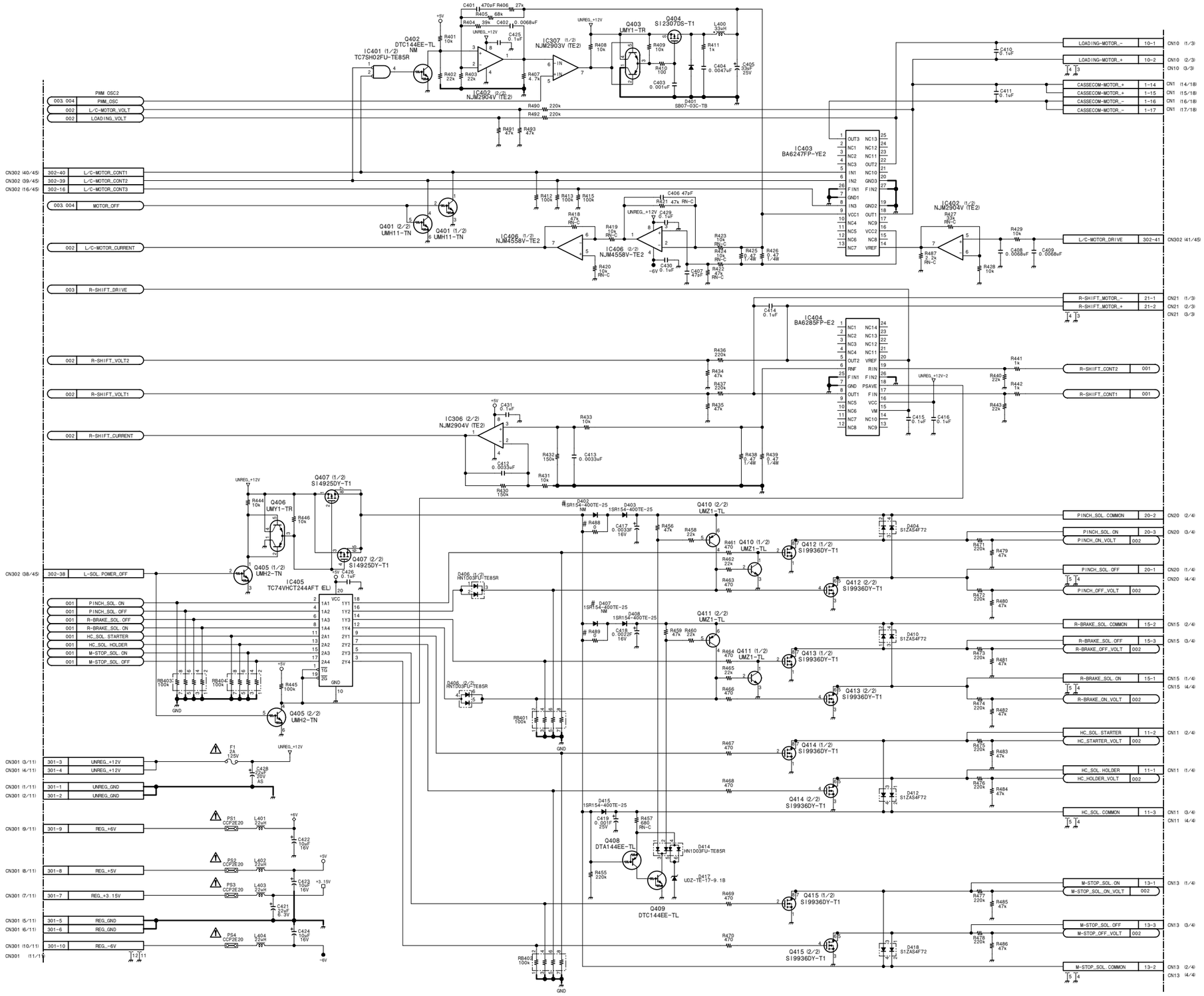
PWM_OSC2
003, 004 PWM_OSC
002 L/C-MOTOR_VOLT
002 LOADING_VOLT
CN302 (40/45) 302-40 L/C-MOTOR_CONT1
CN302 (39/45) 302-39 L/C-MOTOR_CONT2
CN302 (16/45) 302-16 L/C-MOTOR_CONT3
003, 004 MOTOR_OFF
002 L/C-MOTOR_CURRENT
003 R-SHIFT_DRIVE
002 R-SHIFT_VOLT2
002 R-SHIFT_VOLT1
002 R-SHIFT_CURRENT
CN302 (38/45) 302-38 L-SOL_POWER_OFF
001 PINCH_SOL_ON
001 PINCH_SOL_OFF
001 R-BRAKE_SOL_OFF
001 R-BRAKE_SOL_ON
001 HC_SOL_STARTER
001 HC_SOL_HOLDER
001 M-STOP_SOL_ON
001 M-STOP_SOL_OFF
CN301 (3/11) 301-3 UNREG_+12V
CN301 (4/11) 301-4 UNREG_+12V
CN301 (1/11) 301-1 UNREG_GND
CN301 (2/11) 301-2 UNREG_GND
CN301 (9/11) 301-9 REG_+6V
CN301 (8/11) 301-8 REG_+5V
CN301 (7/11) 301-7 REG_+3.15V
CN301 (5/11) 301-5 REG_GND
CN301 (6/11) 301-6 REG_GND
CN301 (10/11) 301-10 REG_-6V
CN301 (11/11)
IC401 (1/2) NM TC7SH02FU-TE85R
IC402 (2/2) NJM2904V (TE2)
IC403 BA6247FP-YE2
IC404 BA6285FP-E2
IC405 TC74VHCT244AFT (EL)
IC406 (1/2) NJM4558V-TE2
IC406 (2/2) NJM4558V-TE2
IC306 (2/2) NJM2904V (TE2)
IC307 (1/2) NJM2903V (TE2)
IC402 (1/2) NJM2904V (TE2)
Q401 (1/2) UMH11-TN
Q401 (2/2) UMH11-TN
Q402 DTC144EE-TL
Q403 UMY1-TR
Q404 SI2307DS-T1
Q405 (1/2) UMH2-TN
Q405 (2/2) UMH2-TN
Q406 UMY1-TR
Q407 (1/2) SI4925DY-T1
Q407 (2/2) SI4925DY-T1
Q408 DTA144EE-TL
Q409 DTC144EE-TL
Q410 (1/2) UMZ1-TL
Q410 (2/2) UMZ1-TL
Q411 (1/2) UMZ1-TL
Q411 (2/2) UMZ1-TL
Q412 (1/2) SI9936DY-T1
Q412 (2/2) SI9936DY-T1
Q413 (1/2) SI9936DY-T1
Q413 (2/2) SI9936DY-T1
Q414 (1/2) SI9936DY-T1
Q414 (2/2) SI9936DY-T1
Q415 (1/2) SI9936DY-T1
Q415 (2/2) SI9936DY-T1
D401 SB07-03C-TB
D402 #SR154-400TE-25 NM
D403 1SR154-400TE-25
D404 S1ZAS4F72
D406 (1/2) HN1D03FU-TE85R
D406 (2/2) HN1D03FU-TE85R
D407 1SR154-400TE-25 NM
D408 1SR154-400TE-25
D410 S1ZAS4F72
D412 S1ZAS4F72
D414 HN1D03FU-TE85R
D415 1SR154-400TE-25
D417 UDZ-TE-17-9.1B
D418 S1ZAS4F72
F1 2A 125V
PS1 CCP2E20
PS2 CCP2E20
PS3 CCP2E20
PS4 CCP2E20
LOADING-MOTOR_- 10-1 CN10 (1/3)
LOADING-MOTOR_+ 10-2 CN10 (2/3)
CN10 (3/3)
CASSECOM-MOTOR_+ 1-14 CN1 (14/18)
CASSECOM-MOTOR_+ 1-15 CN1 (15/18)
CASSECOM-MOTOR_- 1-16 CN1 (16/18)
CASSECOM-MOTOR_- 1-17 CN1 (17/18)
L/C-MOTOR_DRIVE 302-41 CN302 (41/45)
R-SHIFT_MOTOR_- 21-1 CN21 (1/3)
R-SHIFT_MOTOR_+ 21-2 CN21 (2/3)
CN21 (3/3)
R-SHIFT_CONT2 001
R-SHIFT_CONT1 001
PINCH_SOL_COMMON 20-2 CN20 (2/4)
PINCH_SOL_ON 20-3 CN20 (3/4)
PINCH_ON_VOLT 002
PINCH_SOL_OFF 20-1 CN20 (1/4)
CN20 (4/4)
PINCH_OFF_VOLT 002
R-BRAKE_SOL_COMMON 15-2 CN15 (2/4)
R-BRAKE_SOL_OFF 15-3 CN15 (3/4)
R-BRAKE_OFF_VOLT 002
R-BRAKE_SOL_ON 15-1 CN15 (1/4)
CN15 (4/4)
R-BRAKE_ON_VOLT 002
HC_SOL_STARTER 11-2 CN11 (2/4)
HC_STARTER_VOLT 002
HC_SOL_HOLDER 11-1 CN11 (1/4)
HC_HOLDER_VOLT 002
HC_SOL_COMMON 11-3 CN11 (3/4)
CN11 (4/4)
M-STOP_SOL_ON 13-1 CN13 (1/4)
M-STOP_SOL_ON_VOLT 002
M-STOP_SOL_OFF 13-3 CN13 (3/4)
M-STOP_OFF_VOLT 002
M-STOP_SOL_COMMON 13-2 CN13 (2/4)
CN13 (4/4)
IC401 (2/2) TC7SH02FU-TE85R
Servo/mechanism control
DR-428 (5/5)
BOARD NO. 1-679-112-12, 13
LOT NO. 064-
DSR-1800_DR-428_013_5

DV-26 (1/5)

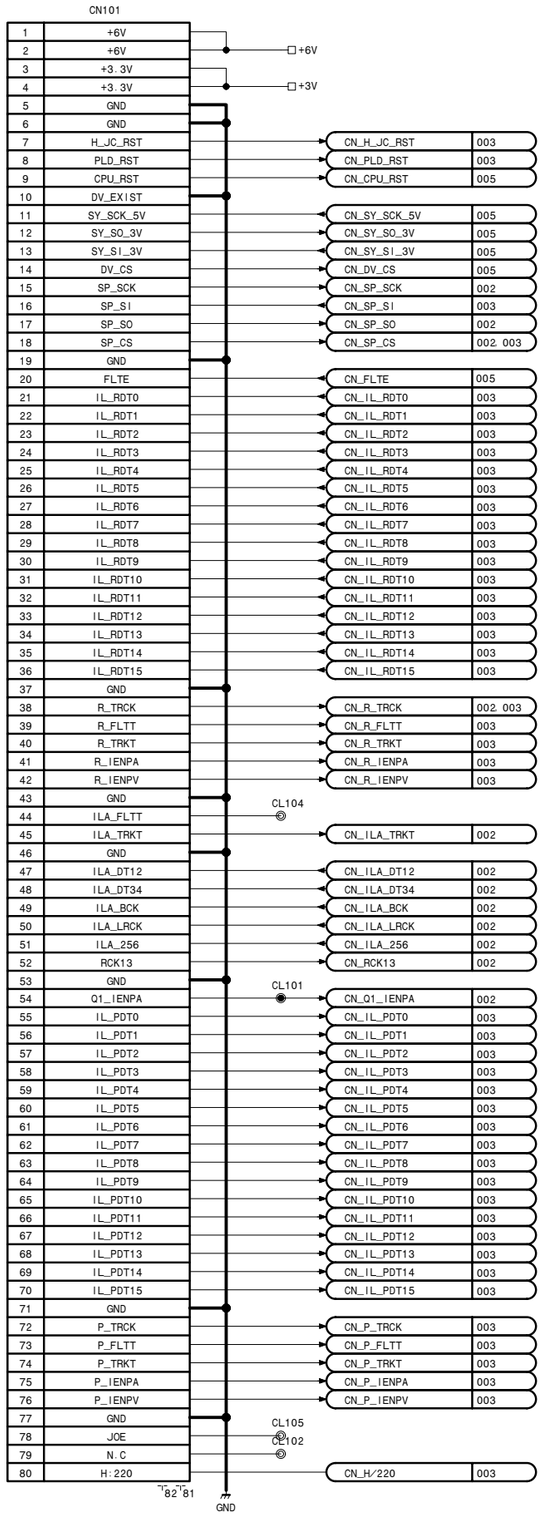

i.LINK/DV input/output board (Option: DSBK-1803)

DV-26 (1/5)

BOARD NO. 1-679-108-12, 13
LOT NO. 064-
DSBK-1803_DV-26_013_1

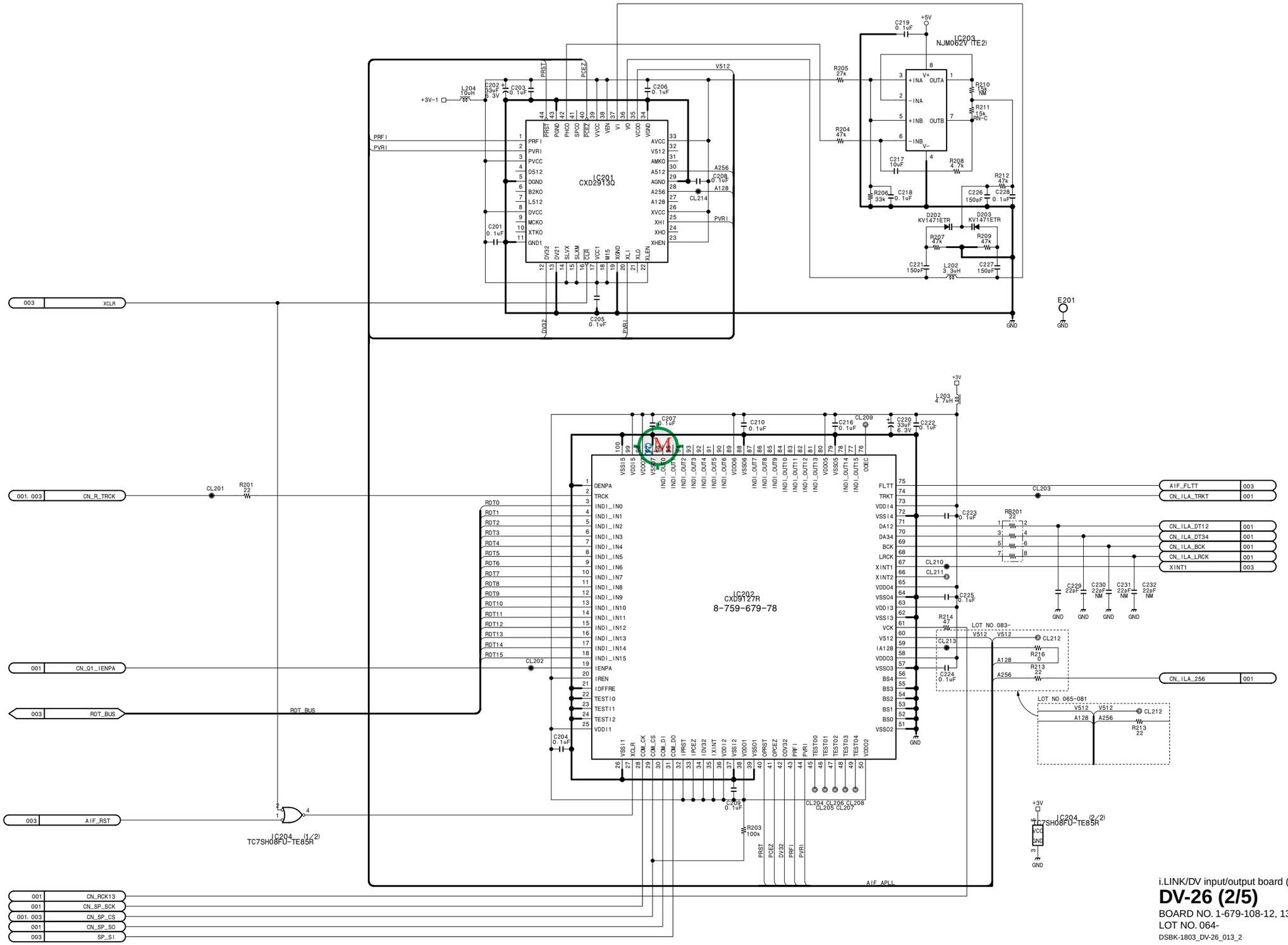

i.LINK/DV input/output board (Option: DSBK-1803)

DV-26 (2/5)

BOARD NO. 1-679-108-12, 13
LOT NO. 064-

DSBK-1803_DV-26_013_2

DV-26 (3/5)

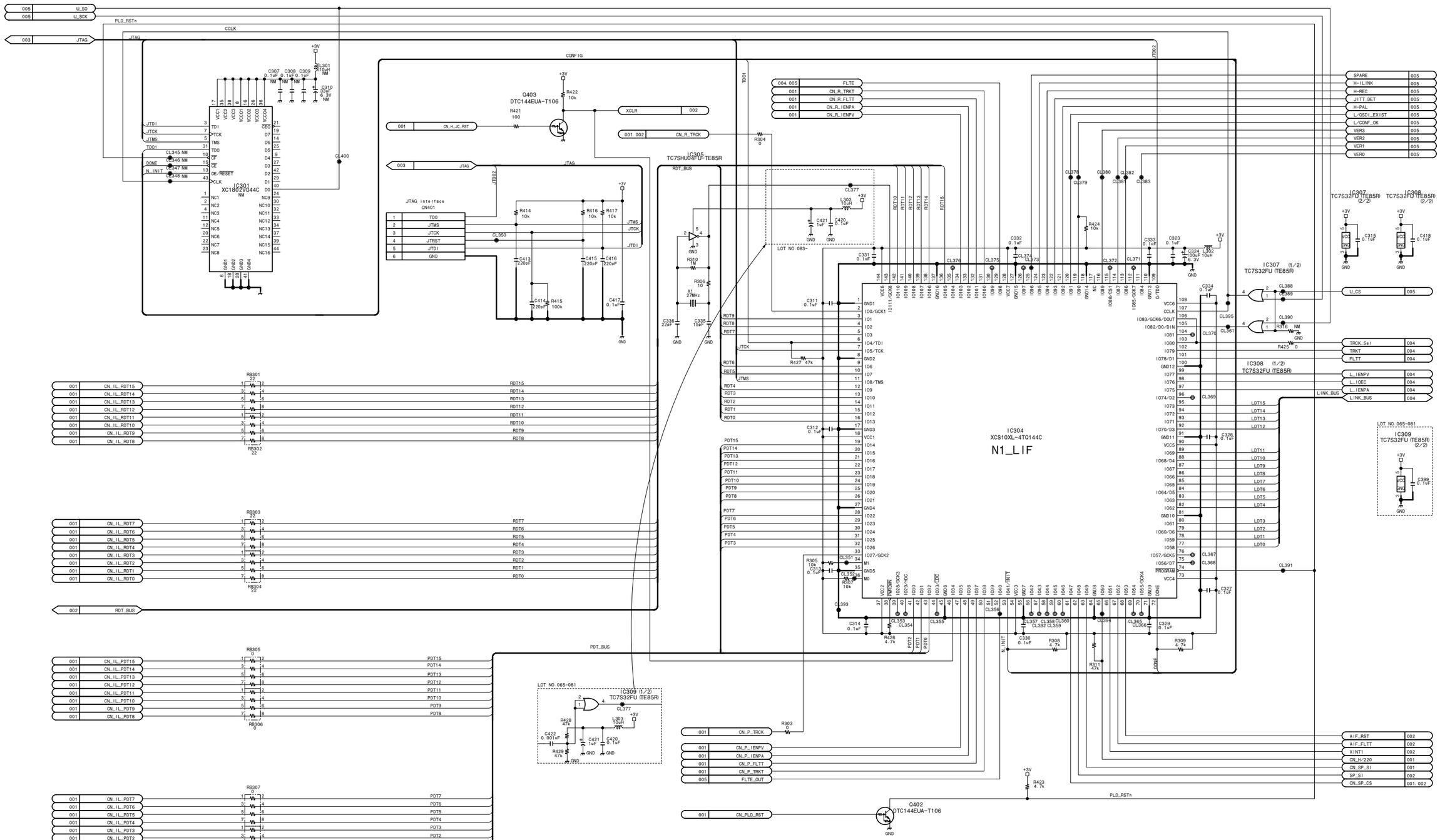
IC301
XC18V02VQ44C
NM
IC305
TC7SHU04FU-TE85R
IC304
XCS10XL-4TQ144C
N1_LIF
IC307 (1/2)
TC7S32FU (TE85R)
IC308 (1/2)
TC7S32FU (TE85R)
IC309 (1/2)
TC7S32FU (TE85R)
IC307 (2/2)
TC7S32FU (TE85R)
IC308 (2/2)
TC7S32FU (TE85R)
IC309 (2/2)
TC7S32FU (TE85R)
Q403
DTC144EUA-T106
Q402
DTC144EUA-T106
JTAG Interface
CN401
CONFIG
JTAG
RDT_BUS
PDT_BUS
LINK_BUS
LOT NO. 065-081
LOT NO. 083-
CL400
CL391
CL395
CL396
CL397
CL398
CL399
CL401
CL402
CL403
CL404
CL405
CL406
CL407
CL408
CL409
CL410
CL411
CL412
CL413
CL414
CL415
CL416
CL417
CL418
CL419
CL420
CL421
CL422
CL423
CL424
CL425
CL426
CL427
CL428
CL429
CL430
CL431
CL432
CL433
CL434
CL435
CL436
CL437
CL438
CL439
CL440

NOTE
*

REF. NO.	CHANG INFORMATION	LOT NO.
C502	33uF → 47uF	083-

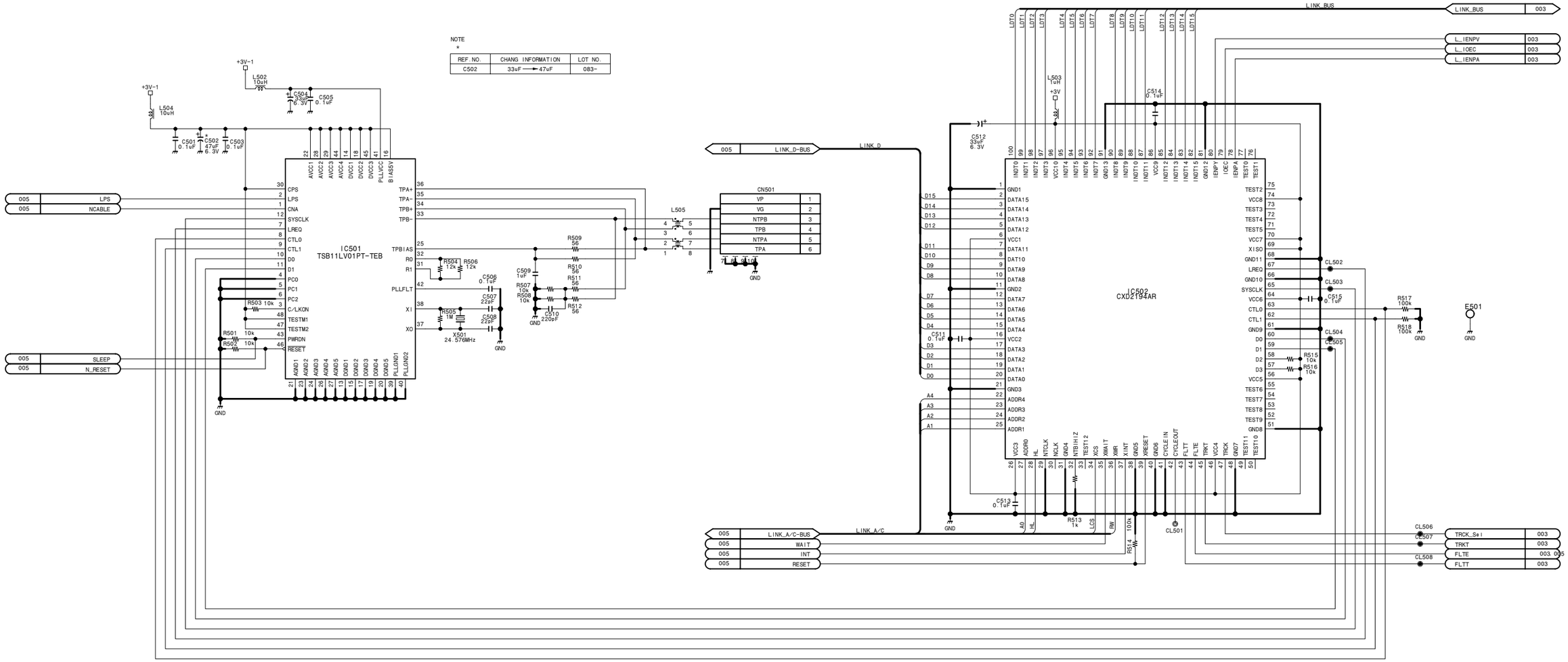

i.LINK/DV input/output board (Option: DSBK-1803)

DV-26 (4/5)

BOARD NO. 1-679-108-12, 13
LOT NO. 064-
DSBK-1803_DV-26_013_4

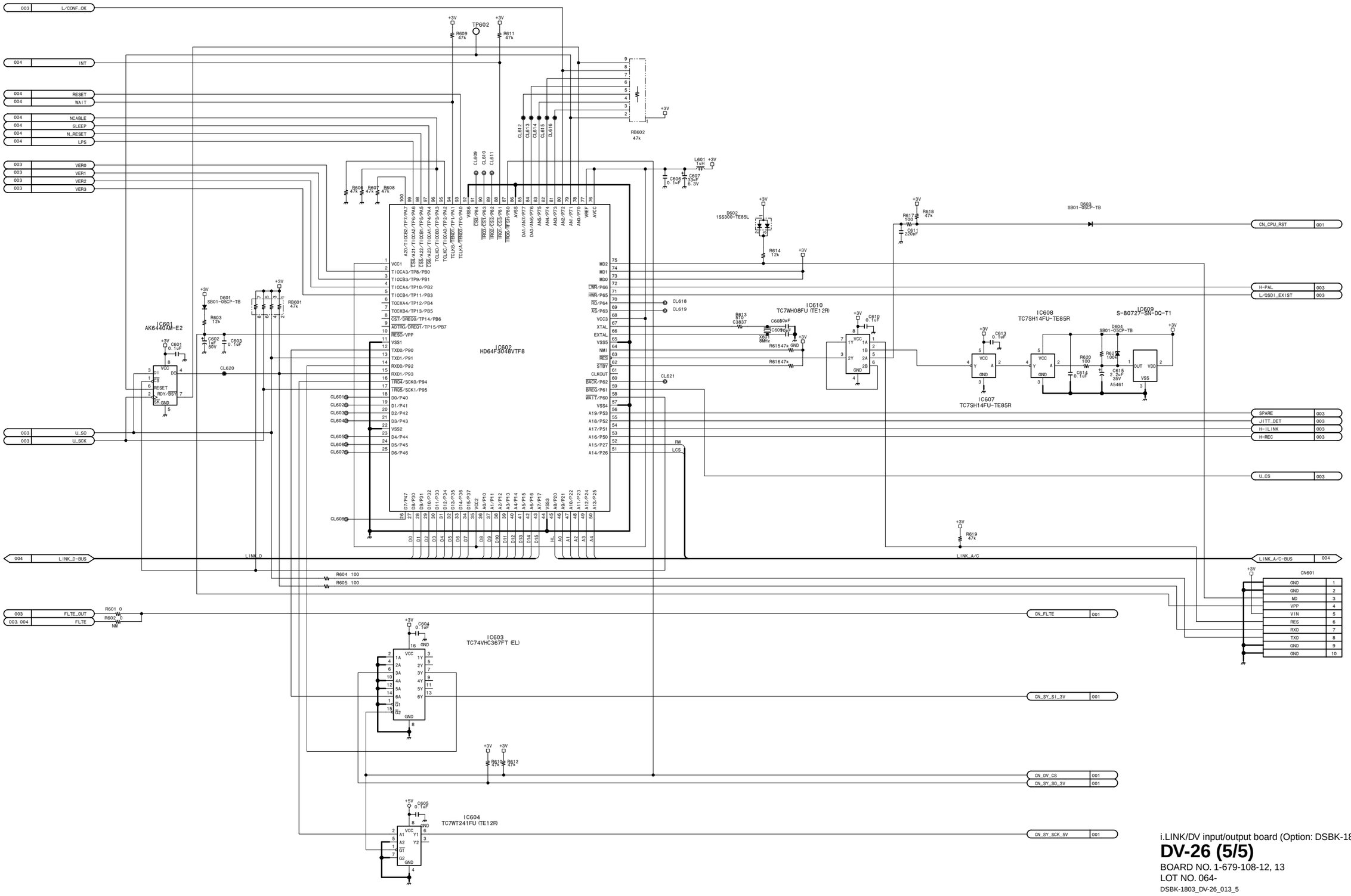

i.LINK/DV input/output board (Option: DSBK-1803)

DV-26 (5/5)

BOARD NO. 1-679-108-12, 13
LOT NO. 064-

DSBK-1803_DV-26_013_5

DY-16 (1/2)

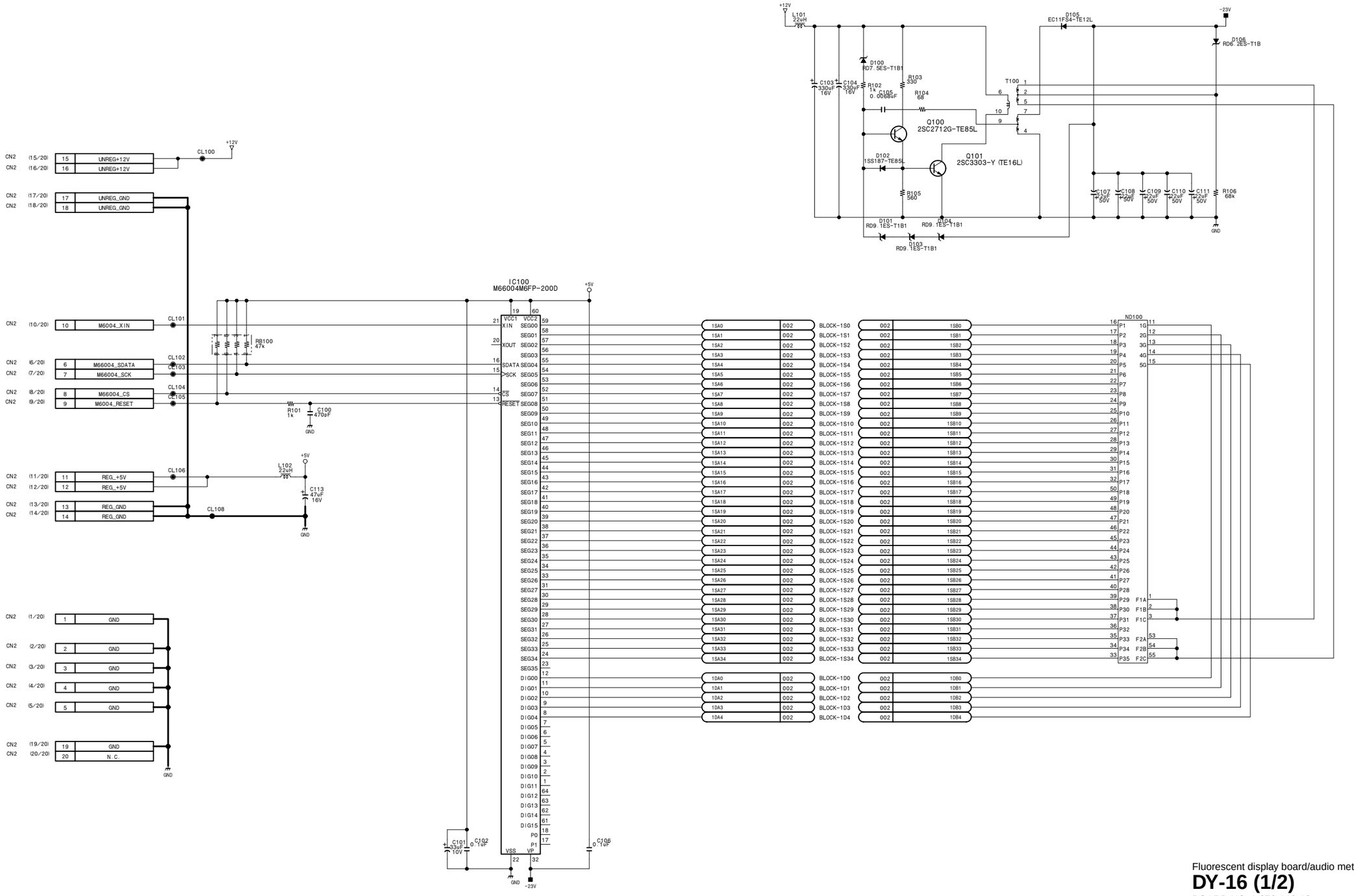

Fluorescent display board/audio meter

DY-16 (1/2)

BOARD NO. 1-679-119-12

LOT NO. 064-

DSR-1800_DY-16_012_1

15-38

http://getMANUAL.com

DY-16 (2/2)

Fluorescent display board/audio meter

DY-16 (2/2)

BOARD NO. 1-679-119-12
LOT NO. 064-
DSR-1800_DY-16_012_2

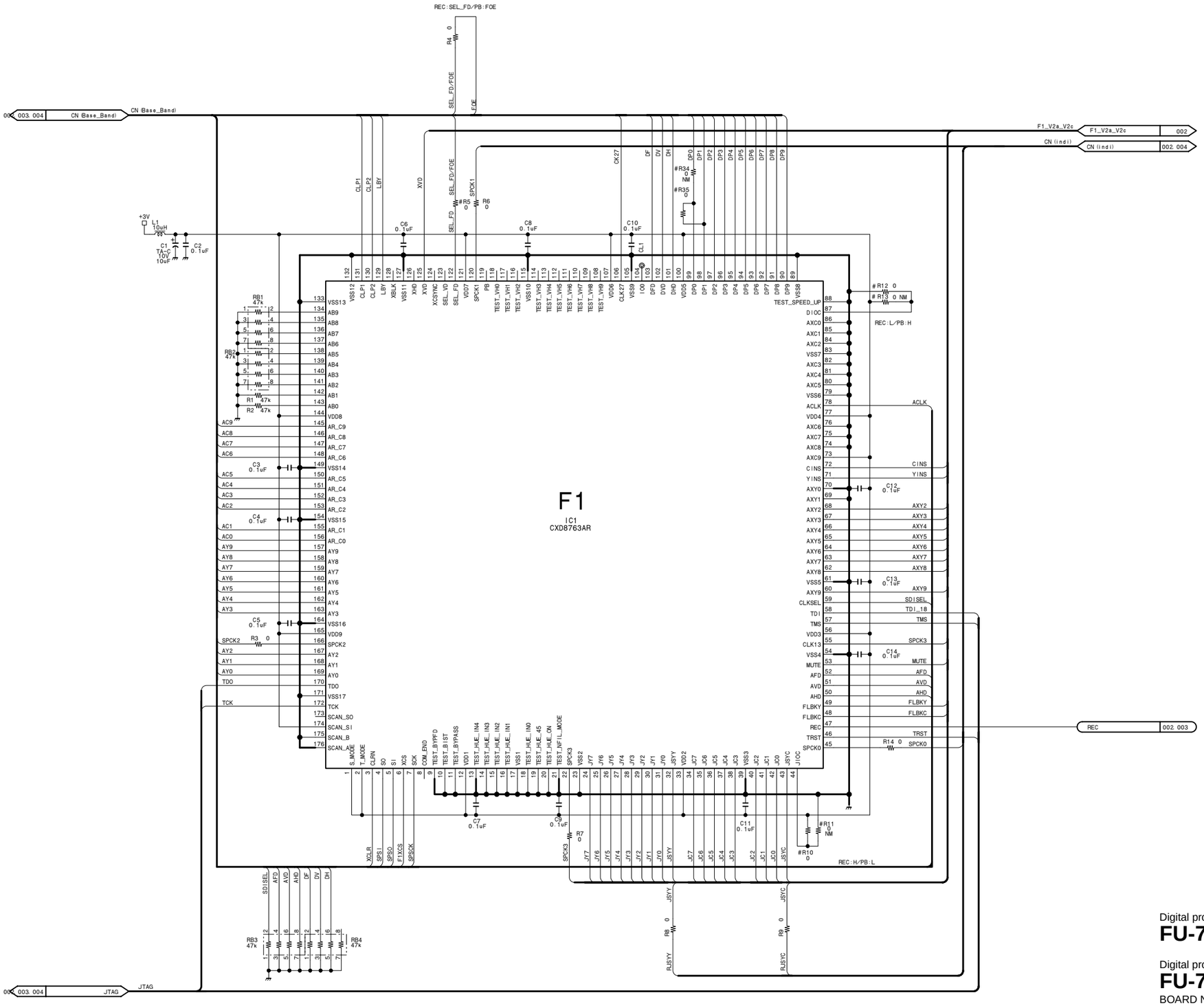

Digital process (PB)

FU-78P (1/4)

Digital process (REC)

FU-78R (1/4)

BOARD NO. 1-679-113-12
LOT NO. 064-
DSR-1800_FU-78_012_1

 FU-78P/78R (2/4)

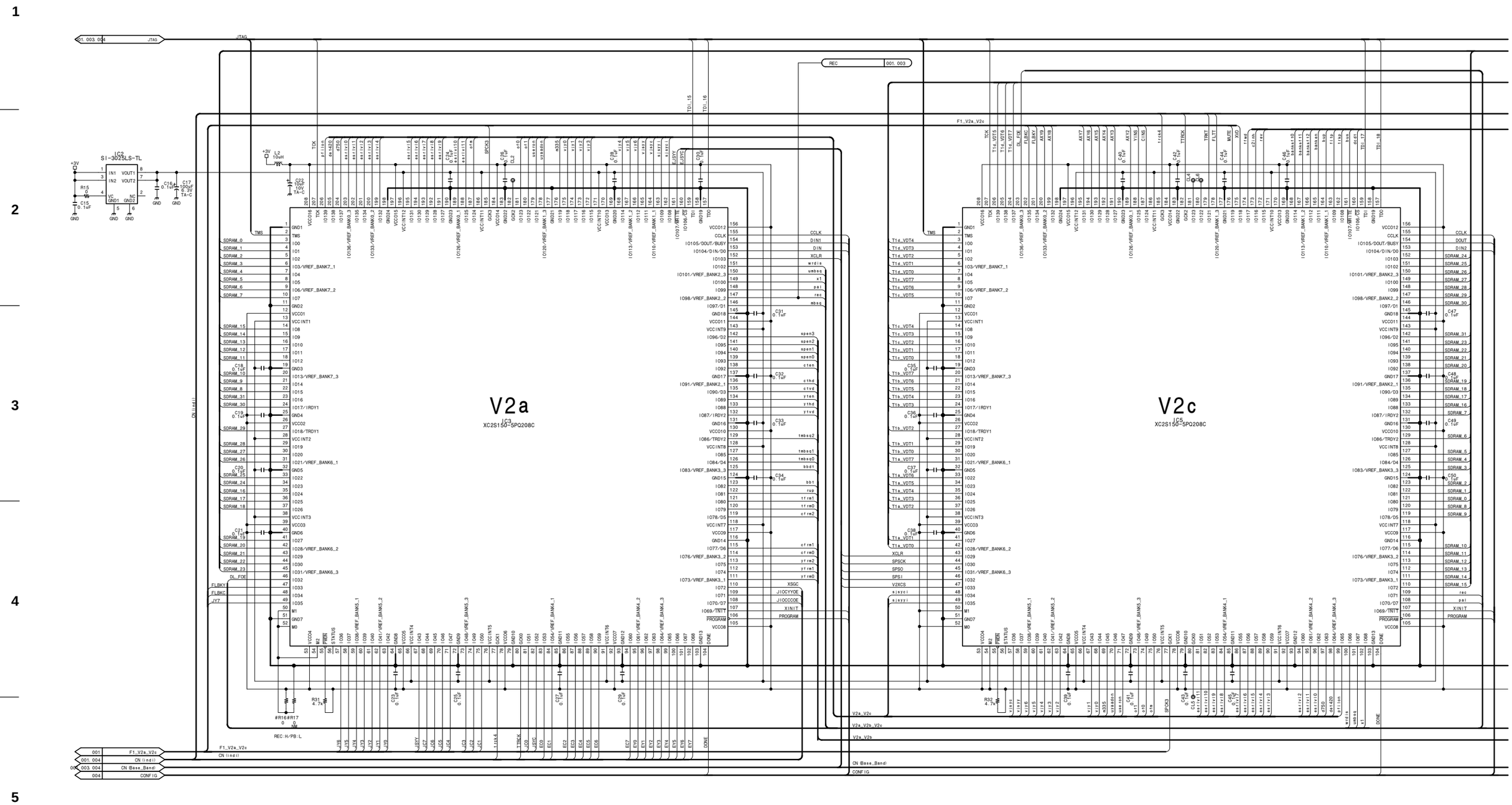

 15-42

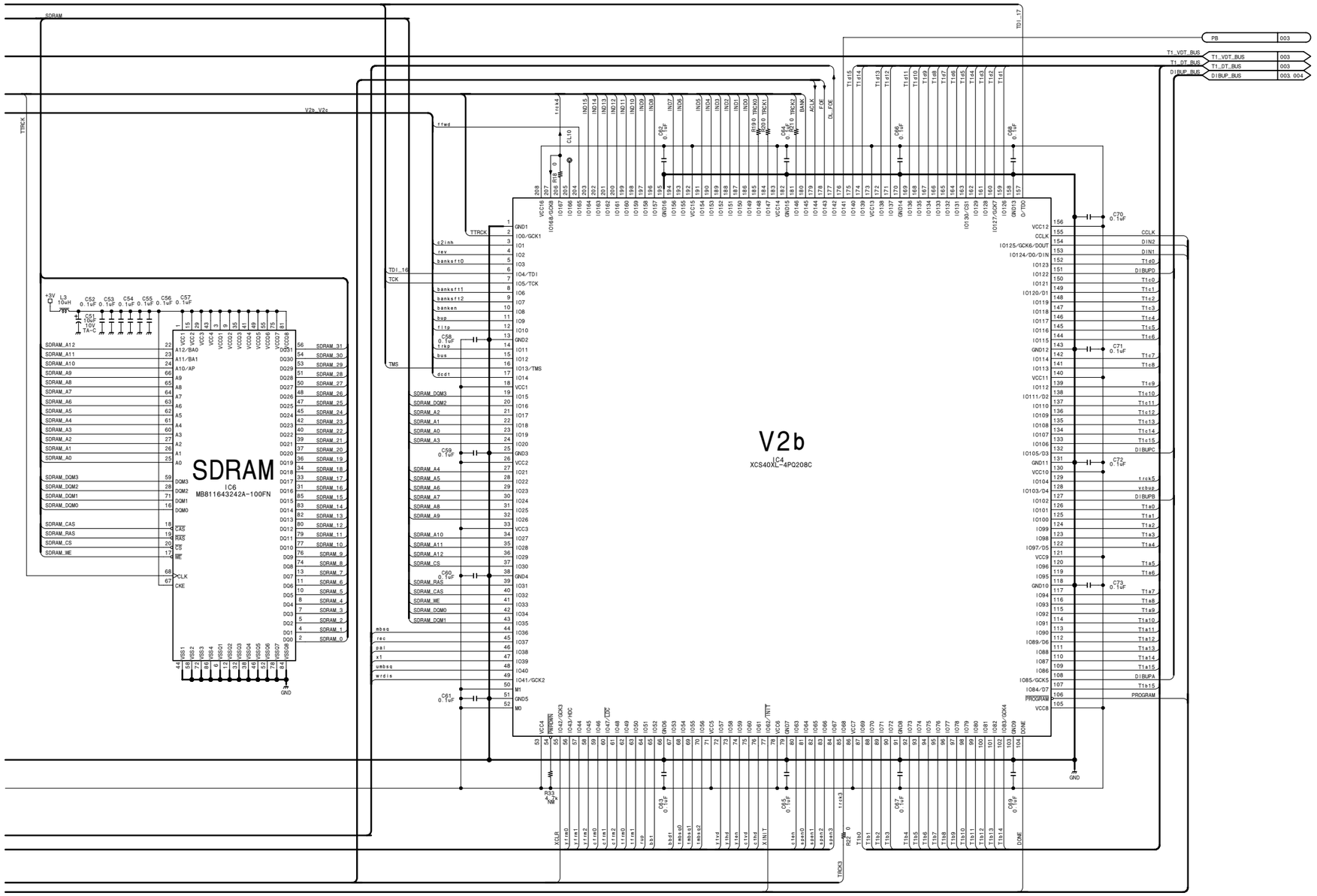

Digital process (PB)

FU-78P (2/4)

Digital process (REC)

FU-78R (2/4)

BOARD NO. 1-679-113-12

LOT NO. 064-

DSR-1800_FU-78_012_2

FU-78P/78R (3/4)

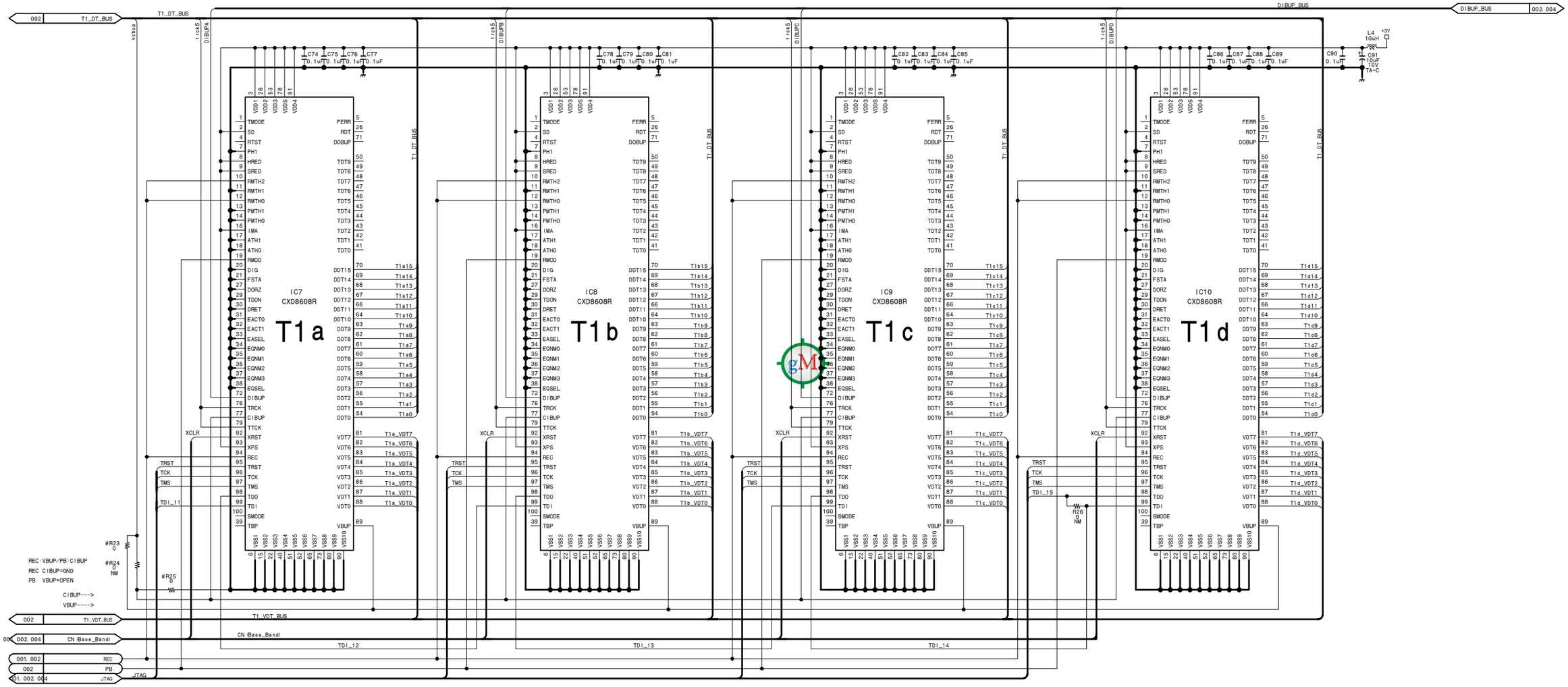

Digital process (PB)
FU-78P (3/4)

Digital process (REC)
FU-78R (3/4)

BOARD NO. 1-679-113-12
LOT NO. 064-
DSR-1800_FU-78_012_3

FU-78P/78R (4/4)

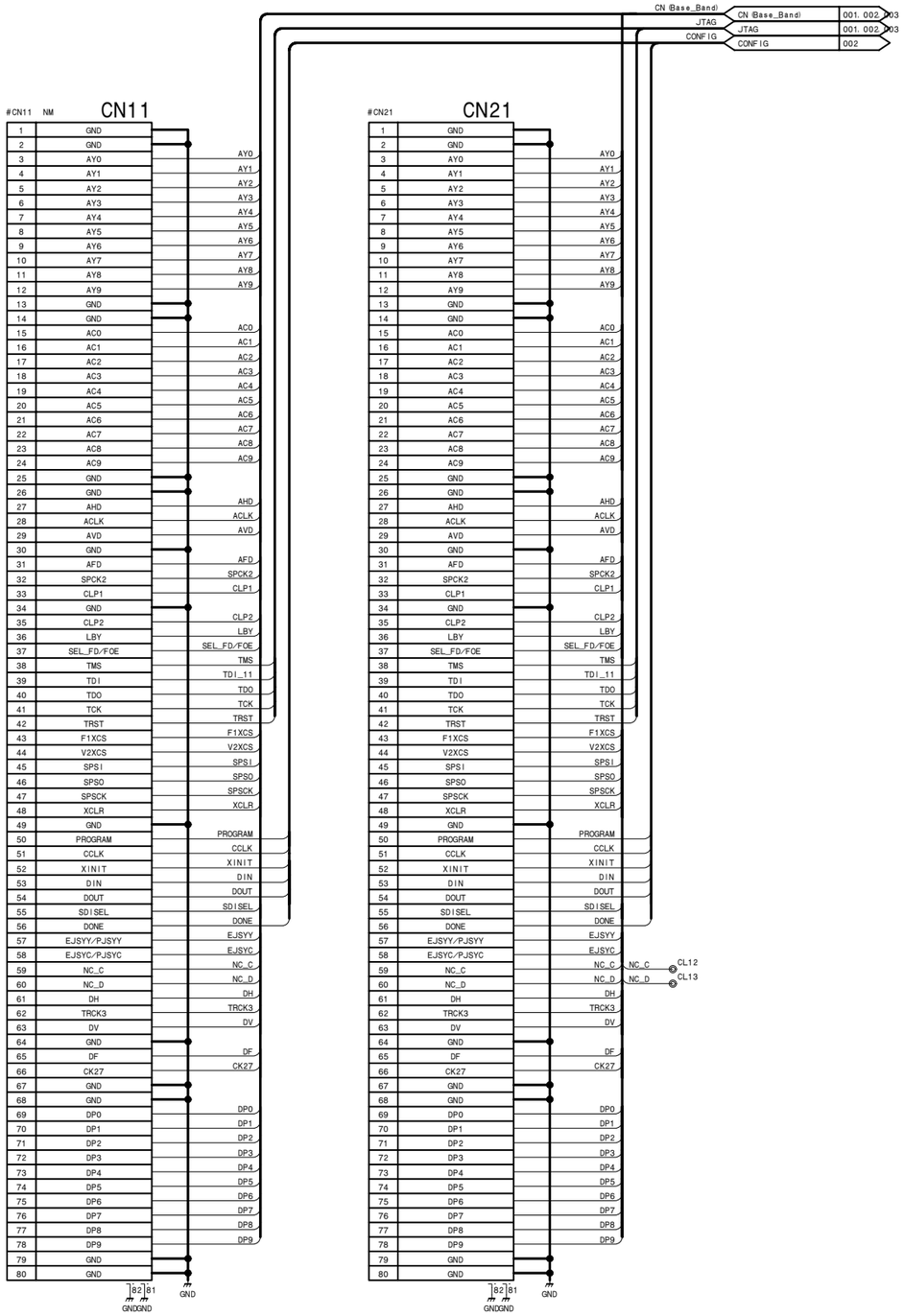

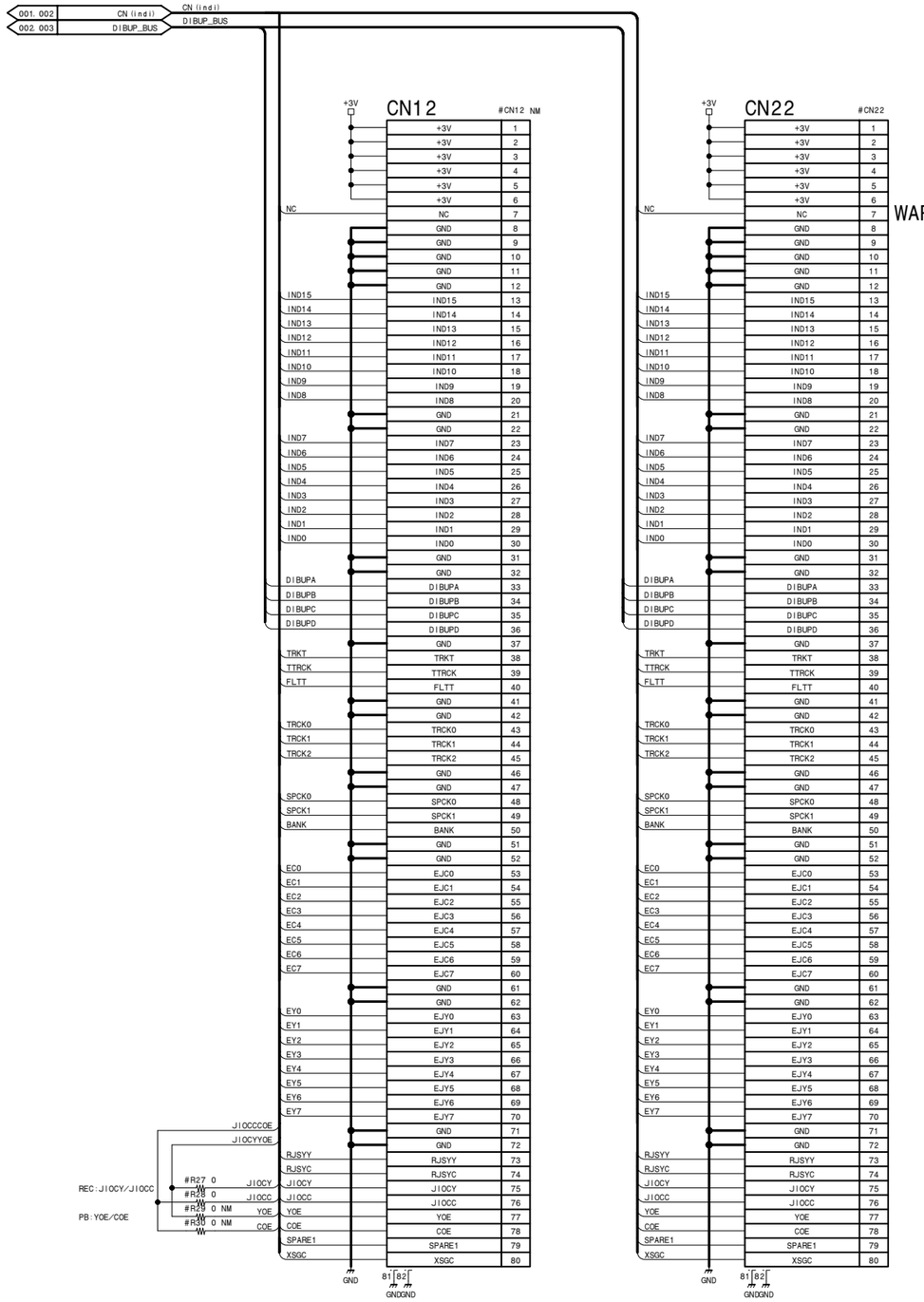

WARNING!

*kaisyuu de Master/Slave wo irekae
*PB ga Master de REC ha Slave
*BIX-125 no DPR-175 ha. mae no jyoutai de REC/PB wo hikkuri kaesite tukau
*Abann ga fueru tteka?

Digital process (PB)
FU-78P (4/4)

Digital process (REC)
FU-78R (4/4)

BOARD NO. 1-679-113-12
LOT NO. 064-
DSR-1800_FU-78_012_4

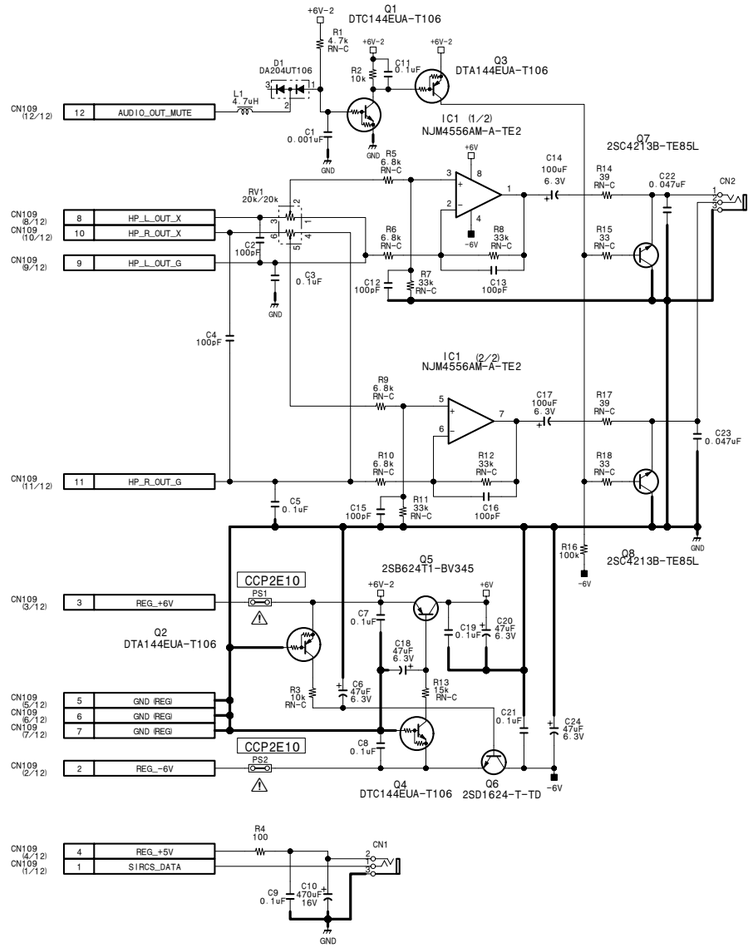

Headphone interface

HP-108

BOARD NO. 1-679-120-11
LOT NO. 064-
DSR-1800_HP-108_011_1

IF-820 (1/12)

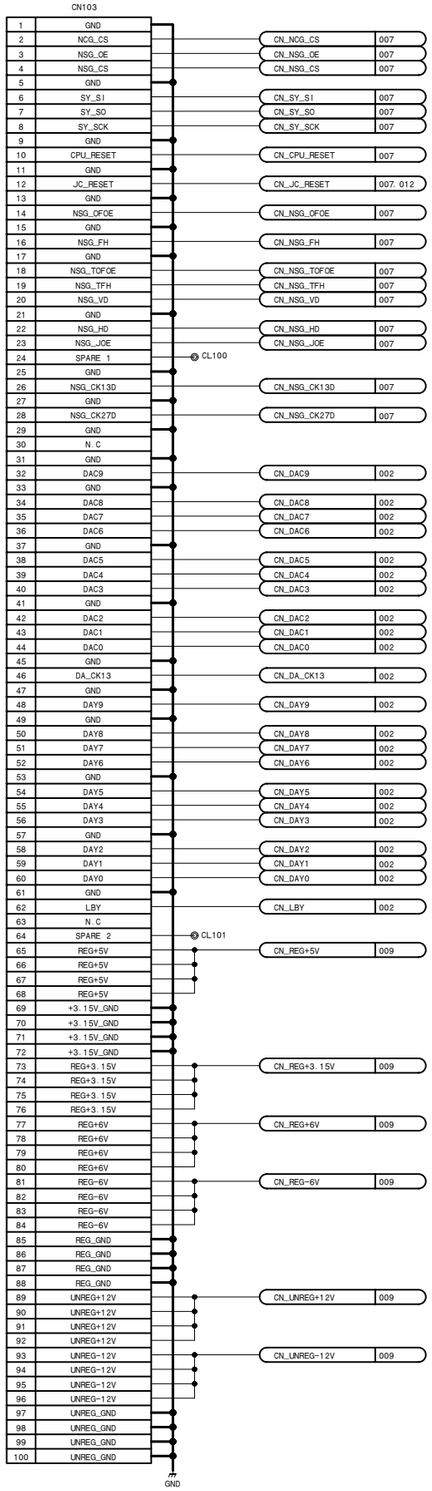

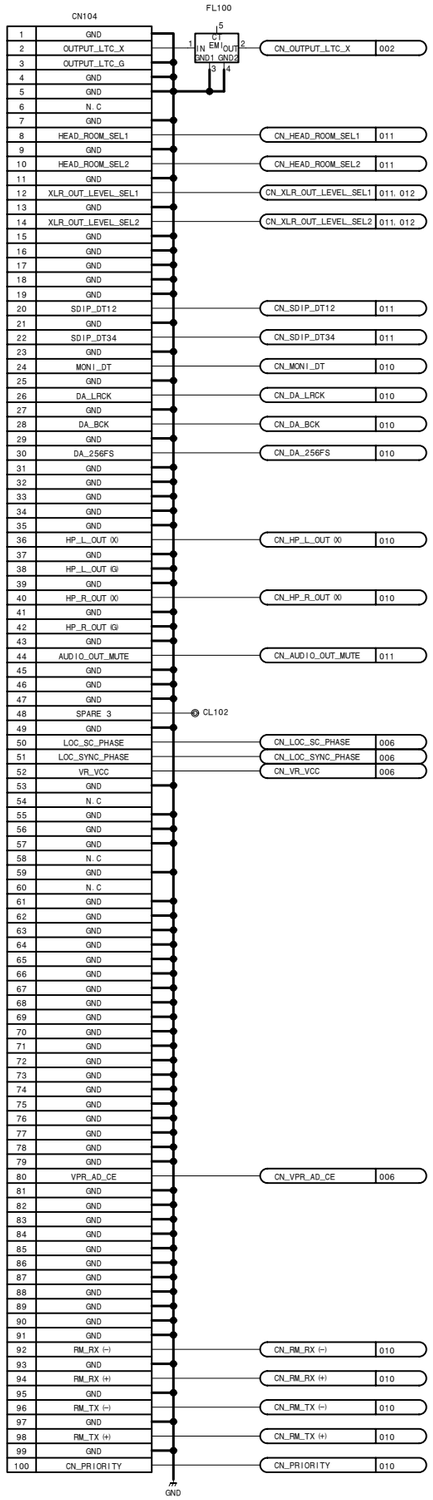

Analog video/audio input・output process

IF-820 (1/12)

BOARD NO. 1-679-102-12, 13

LOT NO. 064-

DSR-1600_IF-820_013_1

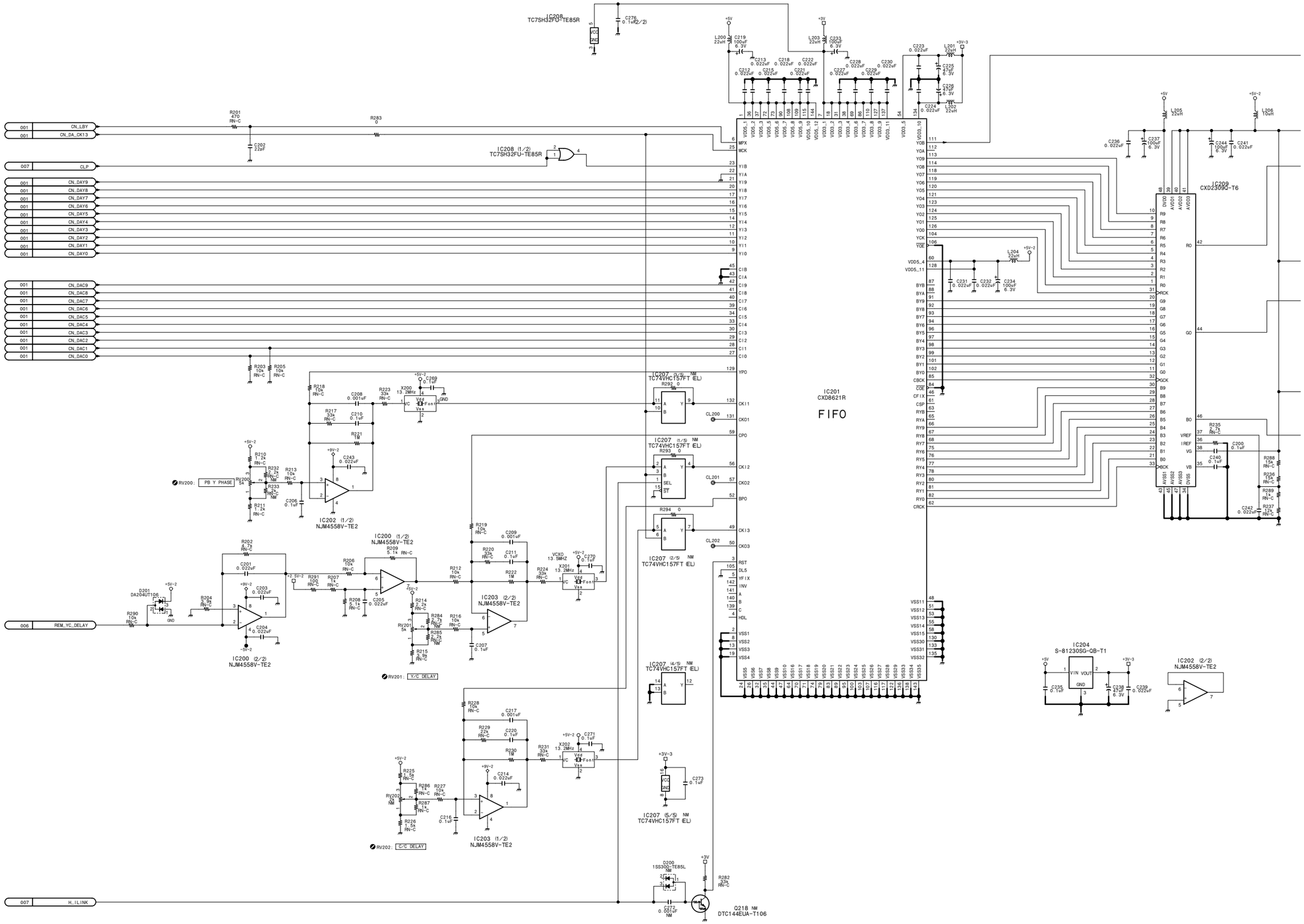
IC208 TC7SH32FU-TE85R
IC208 (1/2) TC7SH32FU-TE85R
IC201 CXD8621R FIFO
IC207 (1/5) NM TC74VHC157FT (EL)
IC207 (2/5) NM TC74VHC157FT (EL)
IC207 (4/5) NM TC74VHC157FT (EL)
IC207 (5/5) NM TC74VHC157FT (EL)
IC209 CXD2309Q-T6
IC200 (1/2) NJM4558V-TE2
IC200 (2/2) NJM4558V-TE2
IC202 (1/2) NJM4558V-TE2
IC202 (2/2) NJM4558V-TE2
IC203 (1/2) NJM4558V-TE2
IC203 (2/2) NJM4558V-TE2
IC204 S-81230SG-QB-T1
Q218 NM DTC144EUA-T106
D200 1SS300-TE85L NM
D201 DA204UT106
RV200 : PB Y PHASE
RV201 : Y/C DELAY
RV202 : C/C DELAY
CN_LBY
CN_DA_CK13
CLP
CN_DAY9
CN_DAY8
CN_DAY7
CN_DAY6
CN_DAY5
CN_DAY4
CN_DAY3
CN_DAY2
CN_DAY1
CN_DAY0
CN_DAC9
CN_DAC8
CN_DAC7
CN_DAC6
CN_DAC5
CN_DAC4
CN_DAC3
CN_DAC2
CN_DAC1
CN_DAC0
REM_YC_DELAY
H_I.LINK

http://getMANUAL.com

IF-820 (2/12)

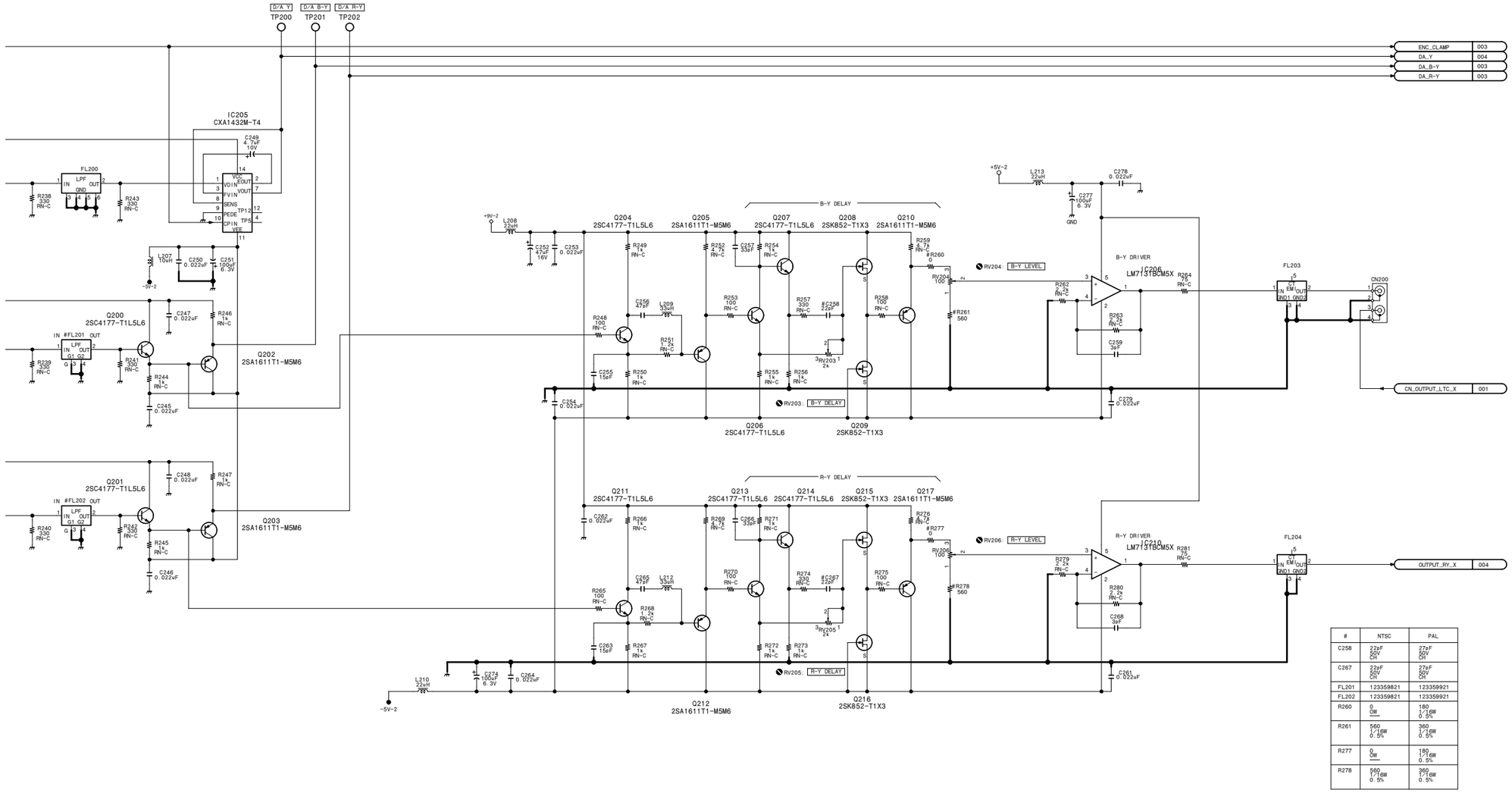

#	NTSC	PAL
C258	22pF 50V CH	27pF 50V CH
C267	22pF 50V CH	27pF 50V CH
FL201	123359821	123359921
FL202	123359821	123359921
R260	0 OW	180 1/16W 0.5%
R261	560 1/16W 0.5%	360 1/16W 0.5%
R277	0 OW	180 1/16W 0.5%
R278	560 1/16W 0.5%	360 1/16W 0.5%

Analog video/audio input・output process

IF-820 (2/12)

BOARD NO. 1-679-102-12, 13
LOT NO. 064-
DSR-1600_IF-820_013_2

IF-820 (3/12)

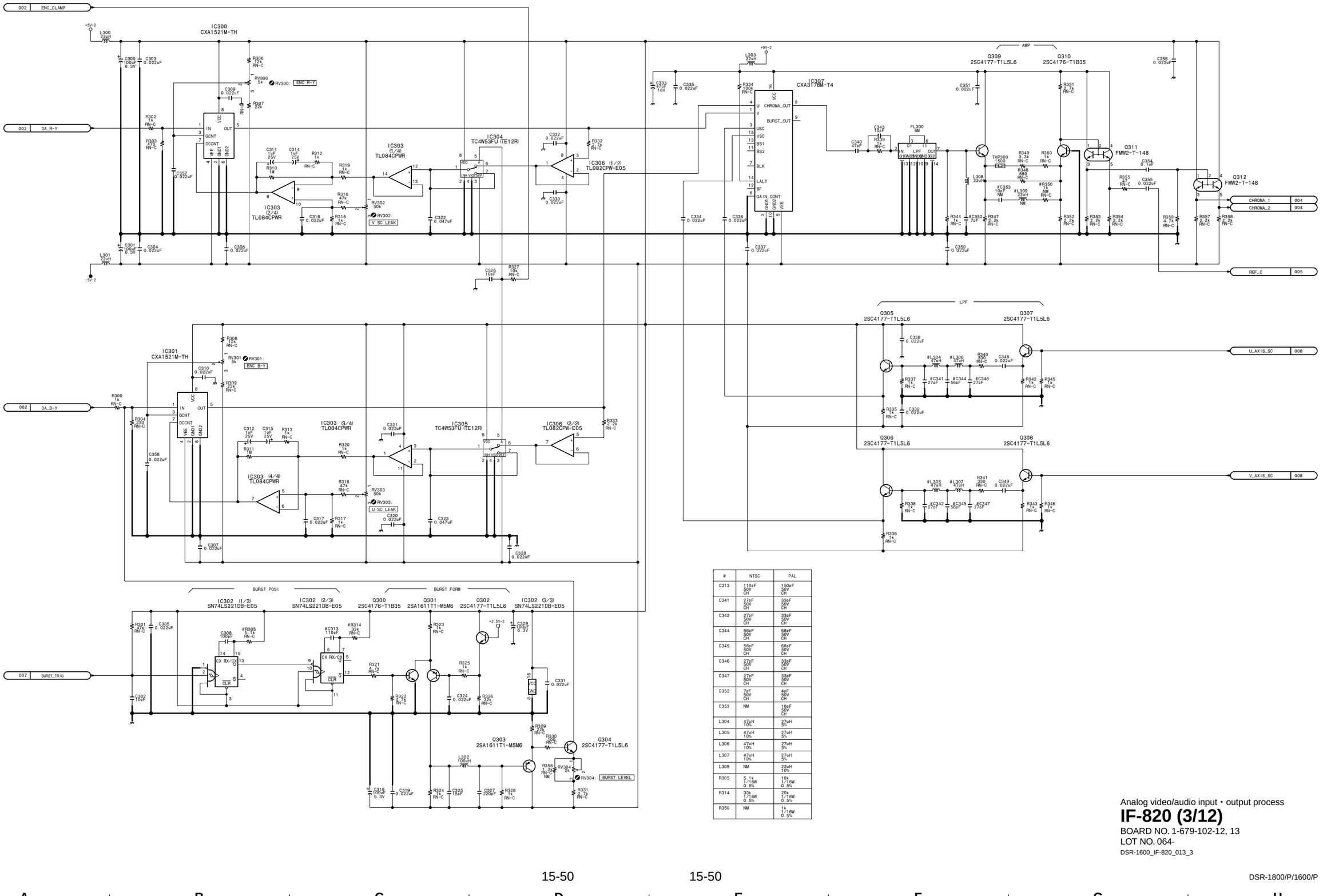

#	NTSC	PAL
C313	110pF 50V CH	150pF 50V CH
C341	27pF 50V CH	33pF 50V CH
C342	27pF 50V CH	33pF 50V CH
C344	56pF 50V CH	68pF 50V CH
C345	56pF 50V CH	68pF 50V CH
C346	27pF 50V CH	33pF 50V CH
C347	27pF 50V CH	33pF 50V CH
C352	7pF 50V CH	4pF 50V CH
C353	NM	10pF 50V CH
L304	47uH 10%	27uH 5%
L305	47uH 10%	27uH 5%
L306	47uH 10%	27uH 5%
L307	47uH 10%	27uH 5%
L309	NM	22uH 10%
R305	5.1k 1/16W 0.5%	10k 1/16W 0.5%
R314	33k 1/16W 0.5%	20k 1/16W 0.5%
R350	NM	1k 1/16W 0.5%

Analog video/audio input・output process

IF-820 (3/12)

BOARD NO. 1-679-102-12, 13
LOT NO. 064-
DSR-1600_IF-820_013_3

15-50

IF-820 (4/12)

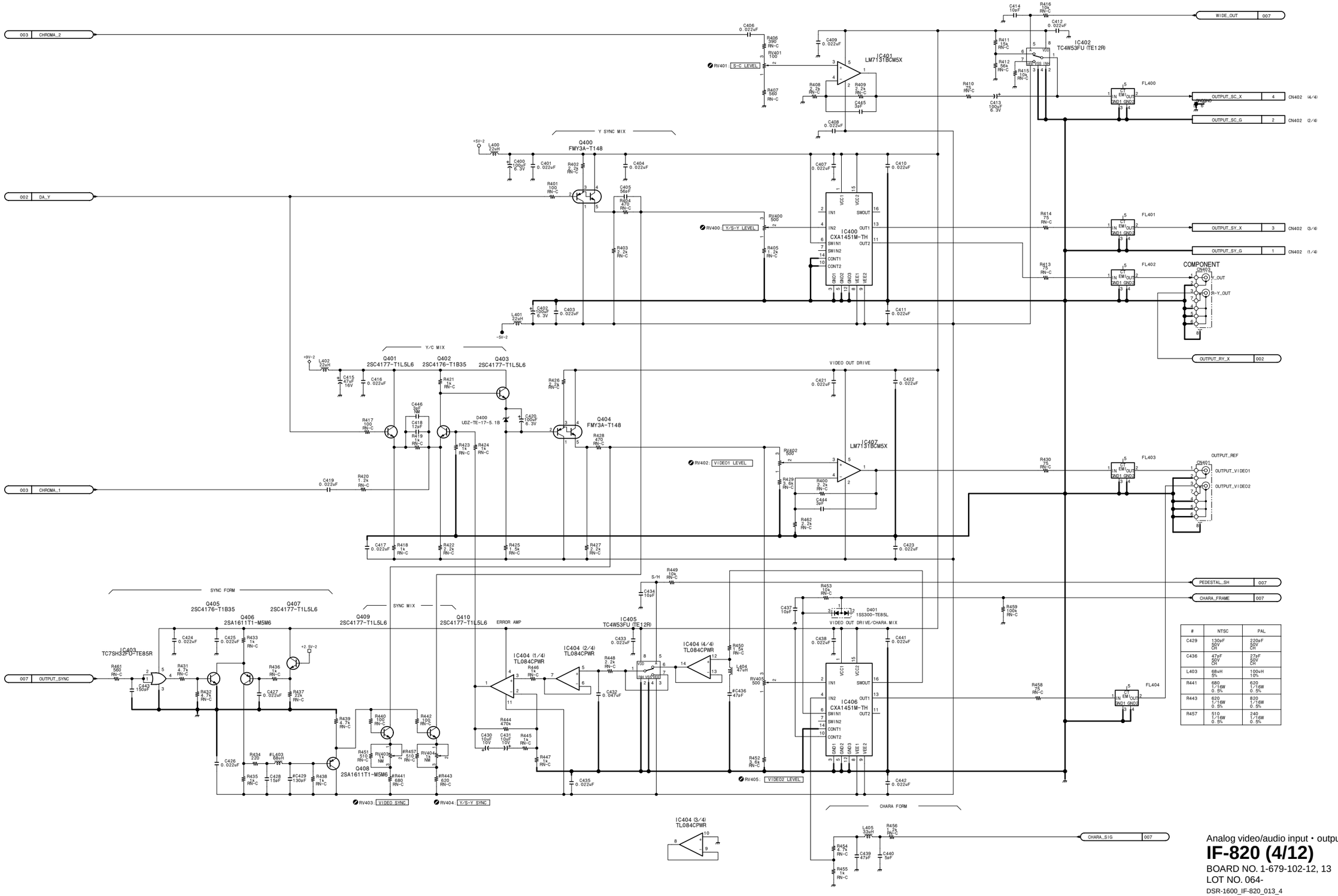

#	NTSC	PAL
C429	130pF 50V CH	220pF 50V CH
C436	47pF 50V CH	27pF 50V CH
L403	68uH 5%	100uH 10%
R441	680 1/16W 0.5%	620 1/16W 0.5%
R443	620 1/16W 0.5%	820 1/16W 0.5%
R457	510 1/16W 0.5%	240 1/16W 0.5%

Analog video/audio input • output process

IF-820 (4/12)

BOARD NO. 1-679-102-12, 13
LOT NO. 064-
DSR-1600_IF-820_013_4

IF-820 (5/12)

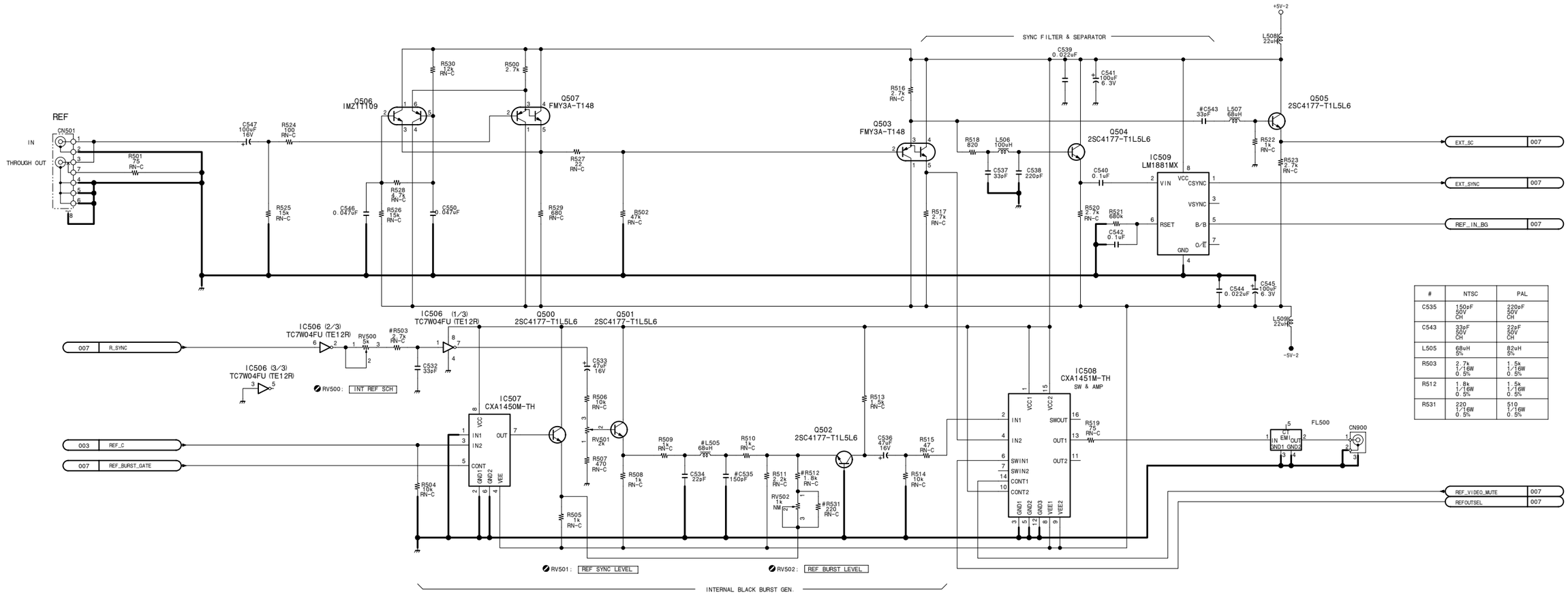

#	NTSC	PAL
C535	150pF 50V CH	220pF 50V CH
C543	33pF 50V CH	22pF 50V CH
L505	68uH 5%	82uH 5%
R503	2.7k 1/16W 0.5%	1.5k 1/16W 0.5%
R512	1.8k 1/16W 0.5%	1.5k 1/16W 0.5%
R531	220 1/16W 0.5%	510 1/16W 0.5%

Analog video/audio input・output process

IF-820 (5/12)

BOARD NO. 1-679-102-12, 13
LOT NO. 064-
DSR-1600_IF-820_013_5

15-52

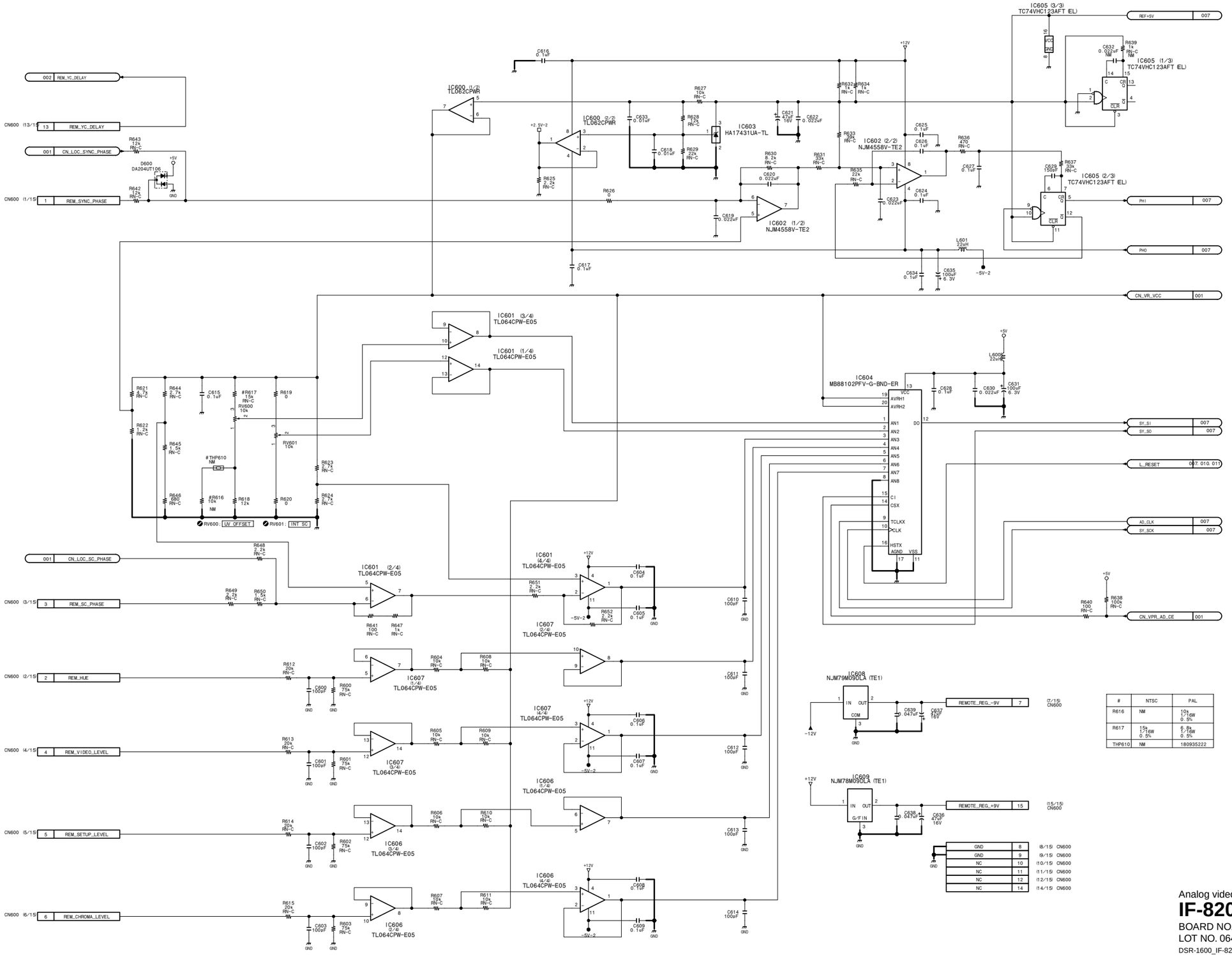

#	NTSC	PAL
R616	NM	10k 1/16W 0.5%
R617	15k 1/16W 0.5%	6.8k 1/16W 0.5%
THP610	NM	180935222

Analog video/audio input・output process

IF-820 (6/12)

BOARD NO. 1-679-102-12, 13
LOT NO. 064-
DSR-1600_IF-820_013_6

IF-820 (7/12)

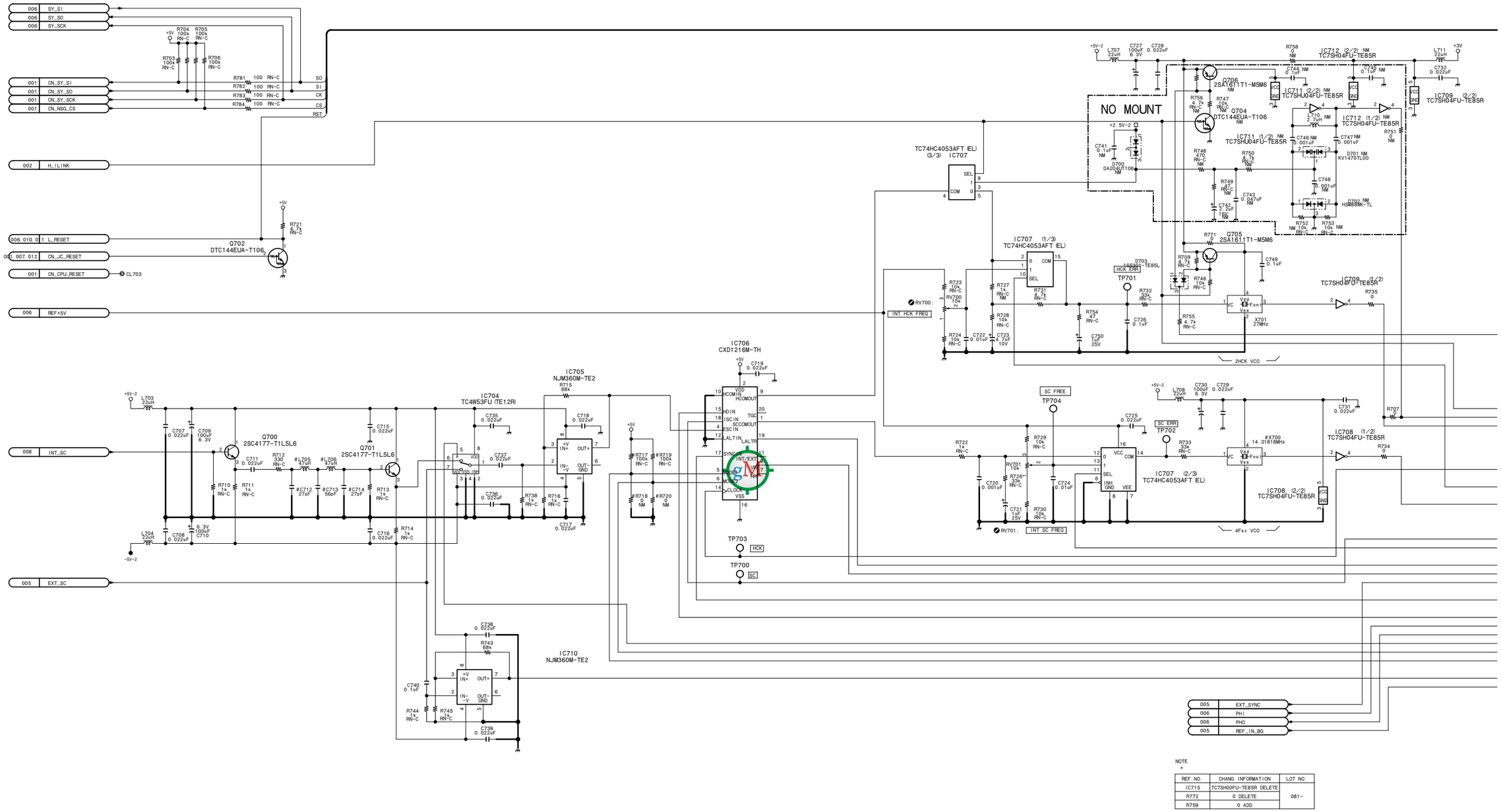

NOTE
*

REF.NO.	CHANG INFORMATION	LOT NO.
IC715	TC7SH00FU-TE85R DELETE	081~
R772	0 DELETE	
R759	0 ADD	

15-54

IF-820 (7/12)

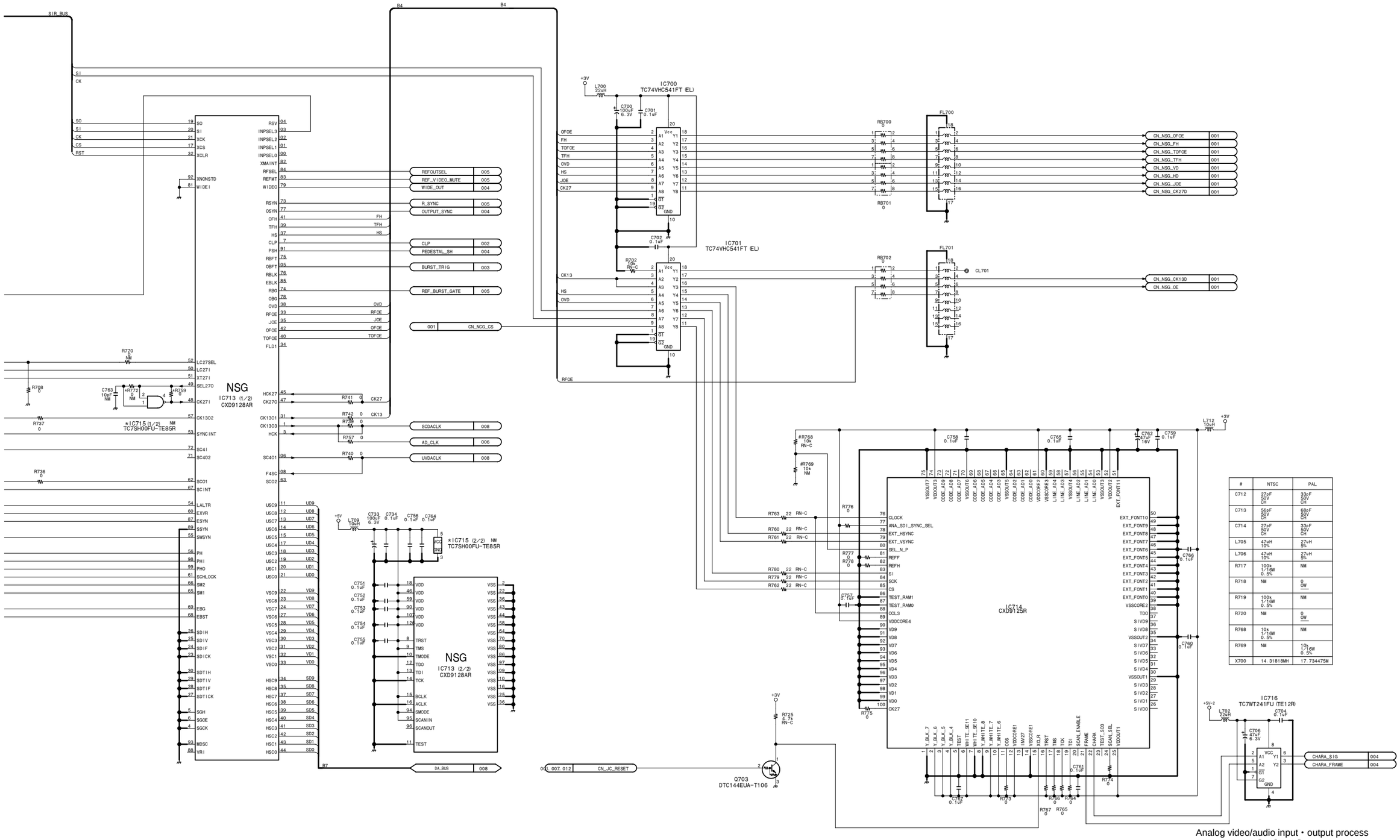

#	NTSC	PAL
C712	27pF 50V CH	33pF 50V CH
C713	56pF 50V CH	68pF 50V CH
C714	27pF 50V CH	33pF 50V CH
L705	47uH 10%	27uH 5%
L706	47uH 10%	27uH 5%
R717	100k 1/16W 0.5%	NM
R718	NM	0 OW
R719	100k 1/16W 0.5%	NM
R720	NM	0 OW
R768	10k 1/16W 0.5%	NM
R769	NM	10k 1/16W 0.5%
X700	14.31818MH	17.734475M

Analog video/audio input・output process

IF-820 (7/12)

BOARD NO. 1-679-102-12, 13
LOT NO. 064-

DSR-1600_IF-820_013_7

IF-820 (8/12)

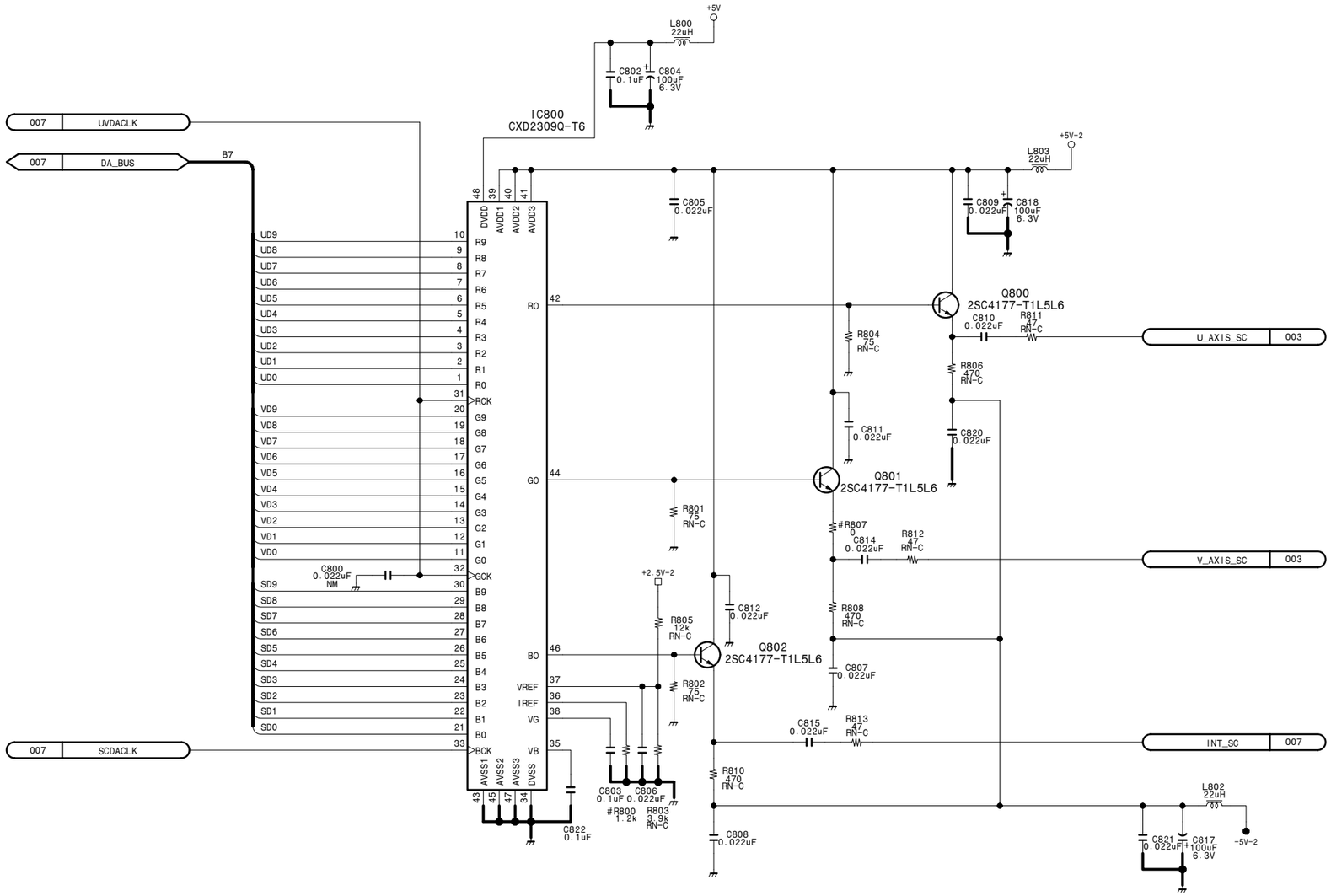

#	NTSC	PAL
R800	1.2k 1/16W 0.5%	1.1k 1/16W 0.5%
R807	0 0W	100 1/16W 0.5%

Analog video/audio input・output process

IF-820 (8/12)

BOARD NO. 1-679-102-12, 13
LOT NO. 064-
DSR-1600_IF-820_013_8

15-56

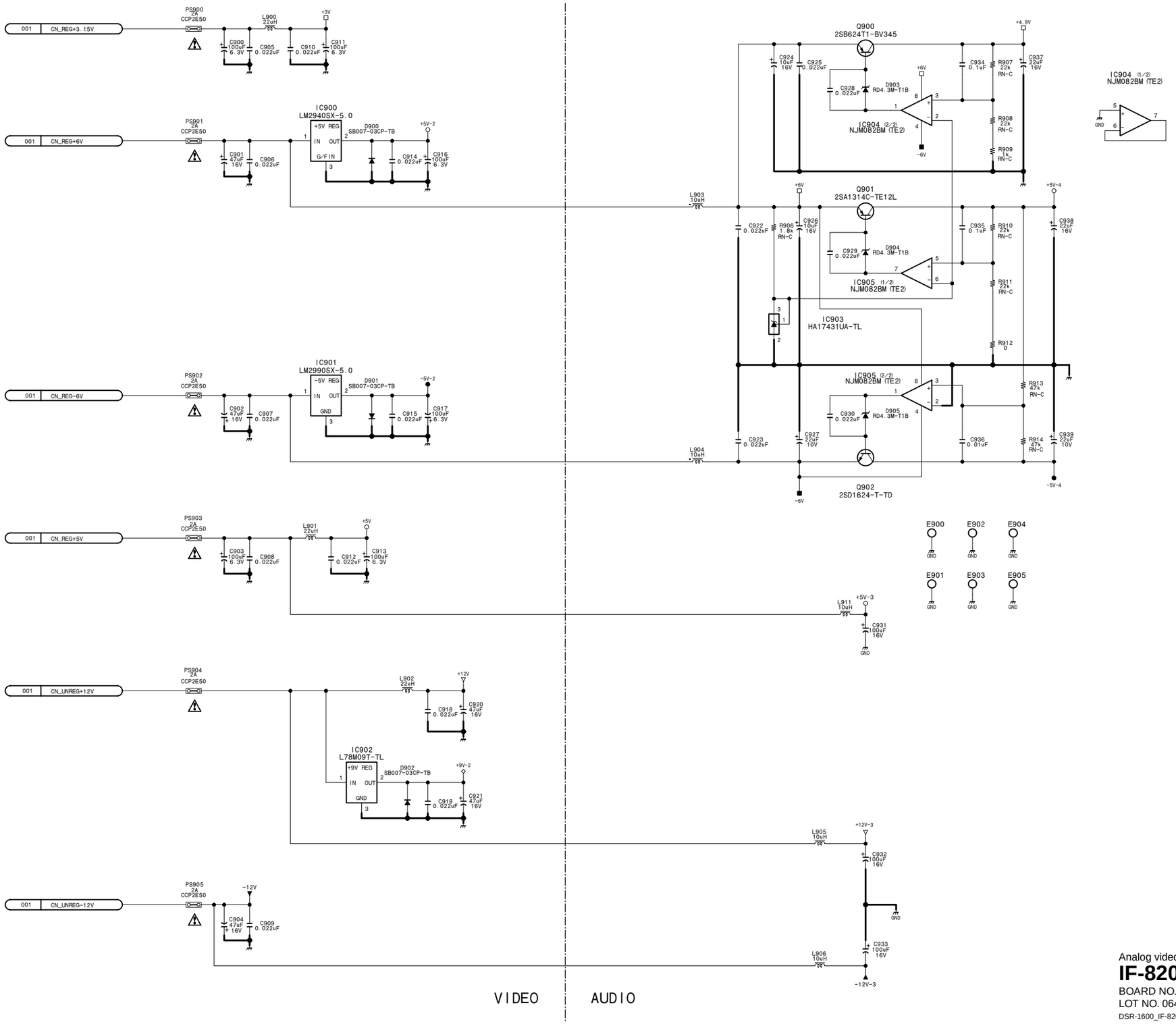

Analog video/audio input・output process

IF-820 (9/12)

BOARD NO. 1-679-102-12, 13
LOT NO. 064-

DSR-1600_IF-820_013_9

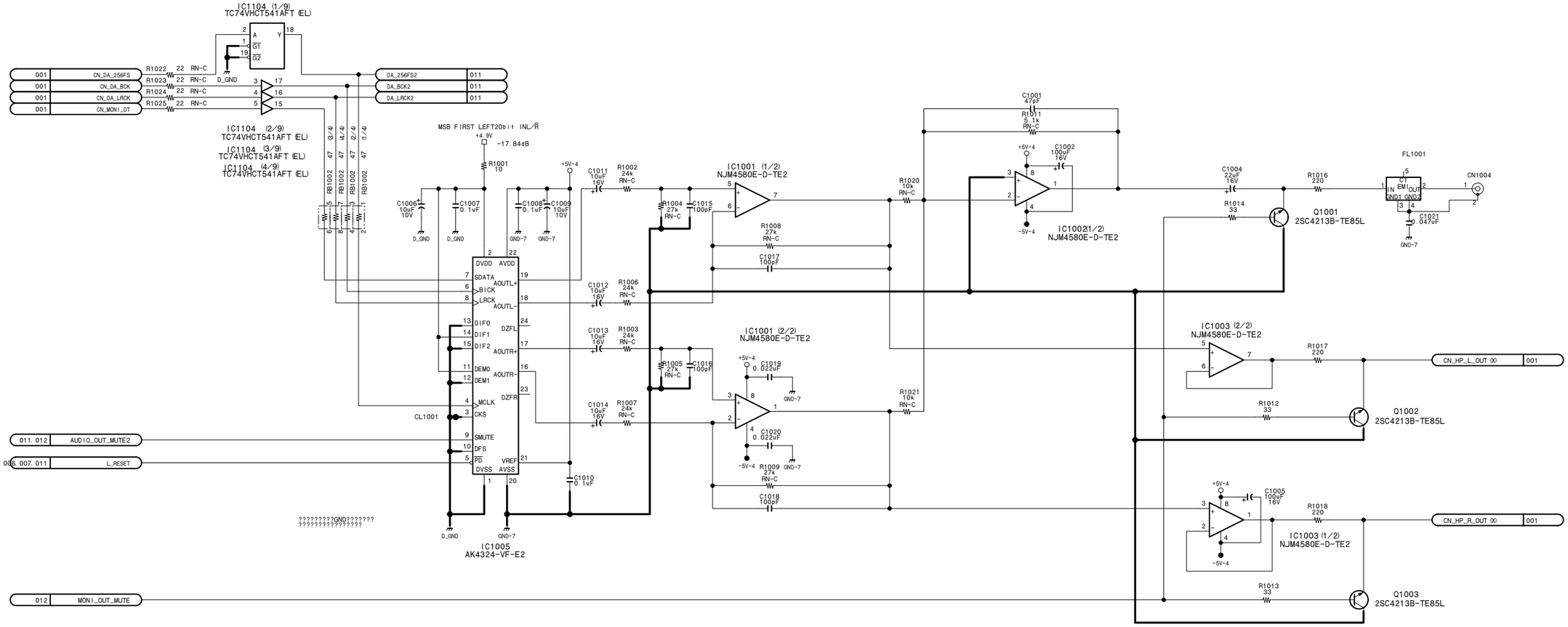

Analog video/audio input・output process

IF-820 (10/12)

BOARD NO. 1-679-102-12, 13
LOT NO. 064-
DSR-1600_IF-820_013_10

http://getMANUAL.com

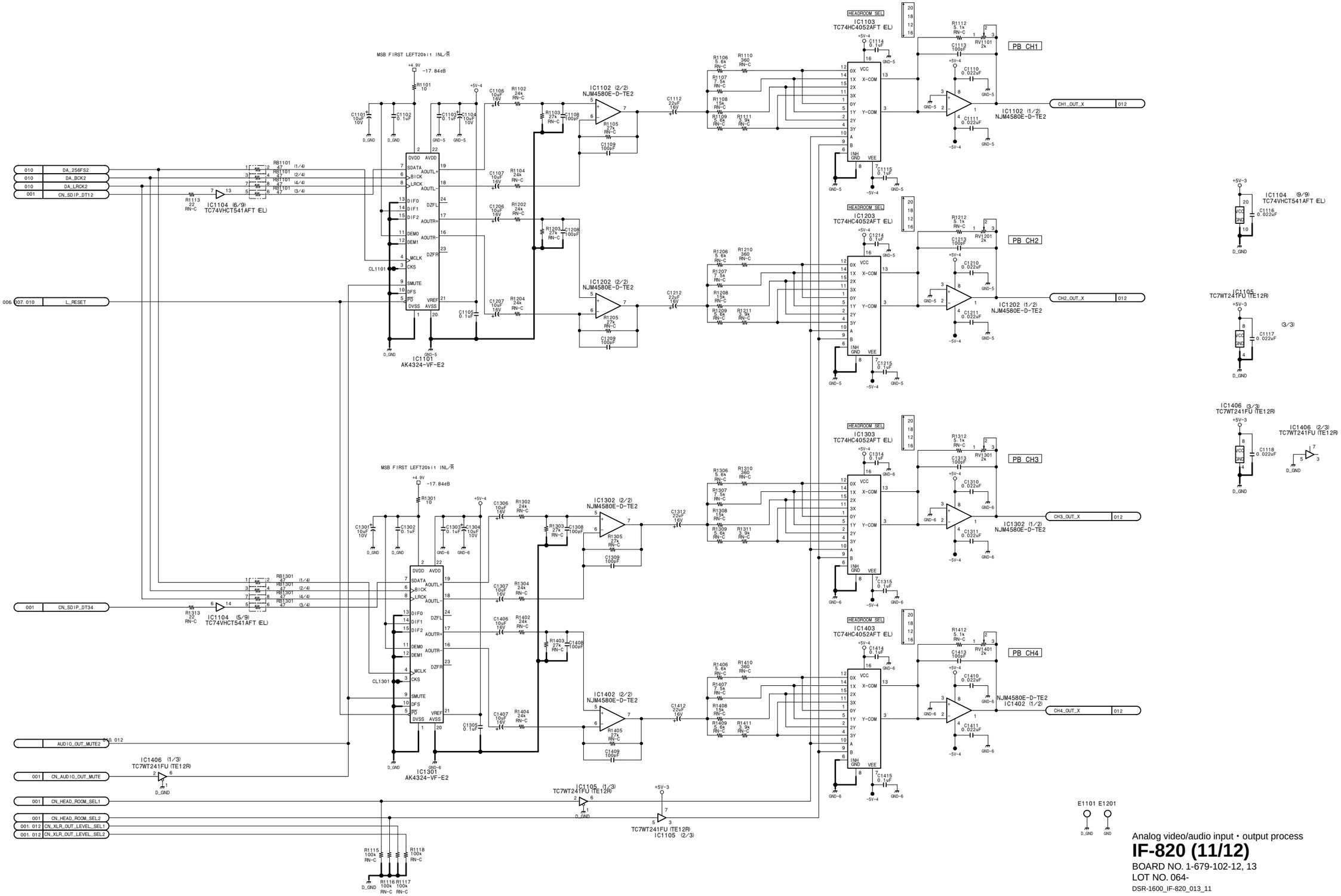

Analog video/audio input・output process

IF-820 (11/12)

BOARD NO. 1-679-102-12, 13

LOT NO. 064-

DSR-1600_IF-820_013_11

IF-820 (12/12)

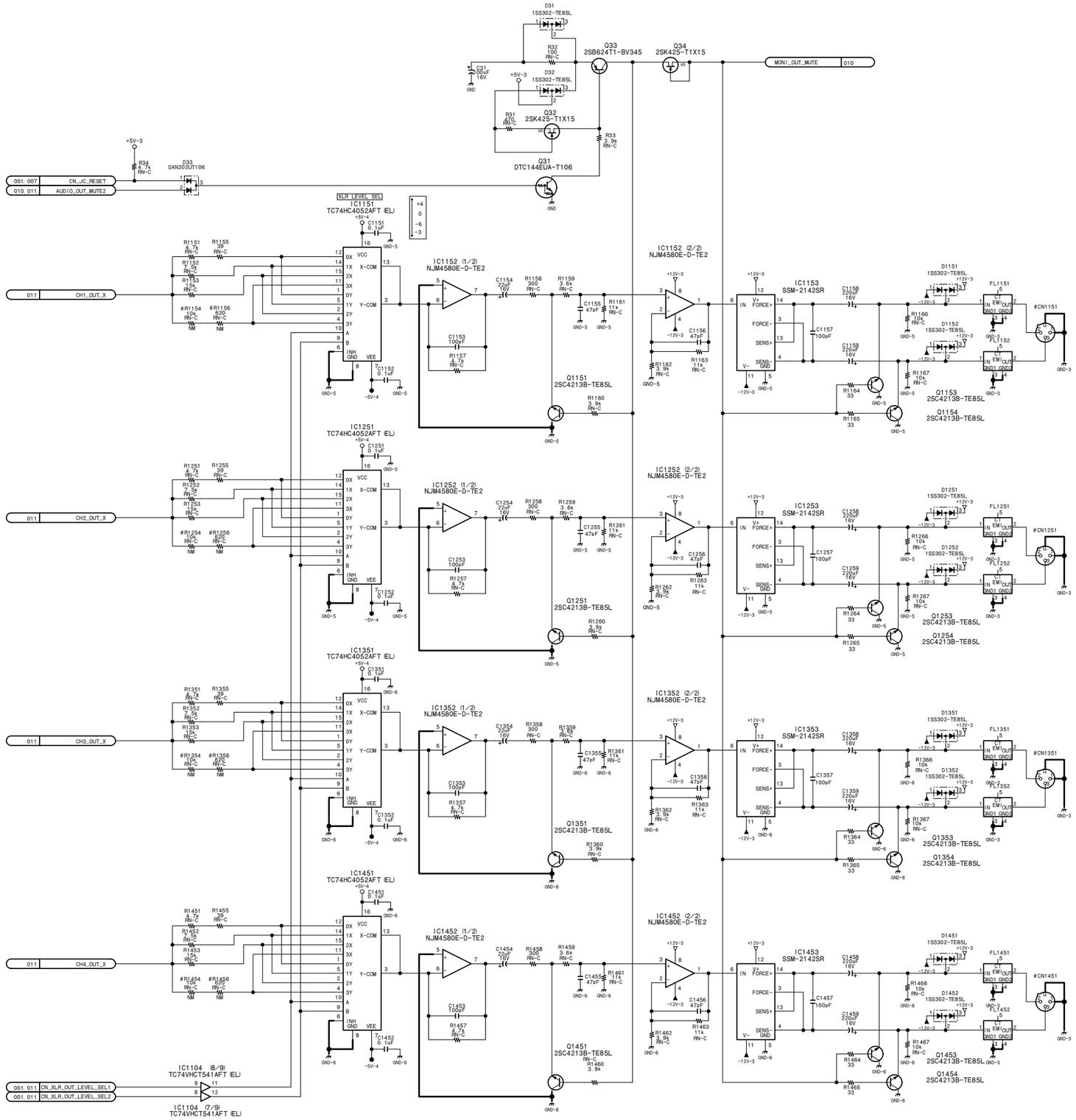

#	NTSC	PAL
R1154	NM	10k 1/16W 0.5%
R1156	NM	620 1/16W 0.5%
R1254	NM	10k 1/16W 0.5%
R1256	NM	620 1/16W 0.5%
R1354	NM	10k 1/16W 0.5%
R1356	NM	620 1/16W 0.5%
R1454	NM	10k 1/16W 0.5%
R1456	NM	620 1/16W 0.5%

#	UC	J
CN1151	—— 17940971 1	—— 179409911
CN1251	—— 17940971 1	—— 179409911
CN1351	—— 17940971 1	—— 179409911
CN1451	—— 17940971 1	—— 179409911

Analog video/audio input・output process

IF-820 (12/12)

BOARD NO. 1-679-102-12, 13
LOT NO. 064-

DSR-1600_IF-820_013_12

KY-484/484A (1/6)

CN108

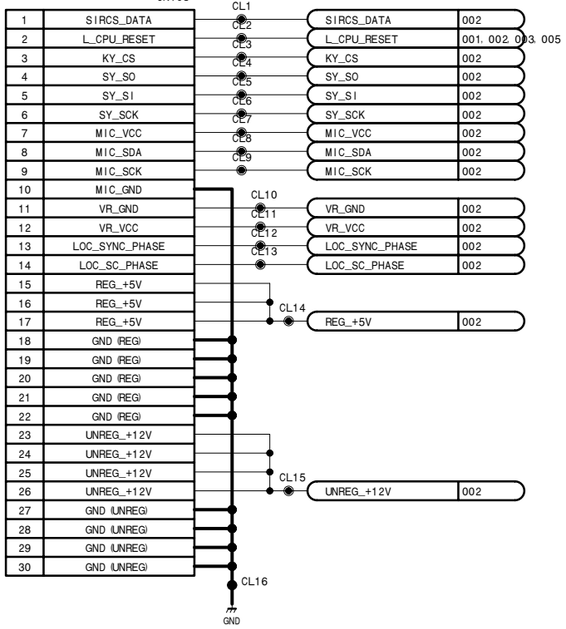

CN1

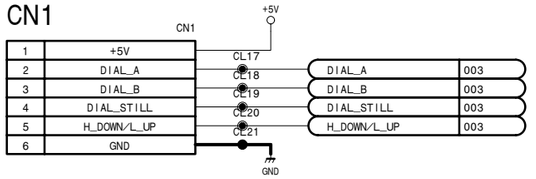

CN2

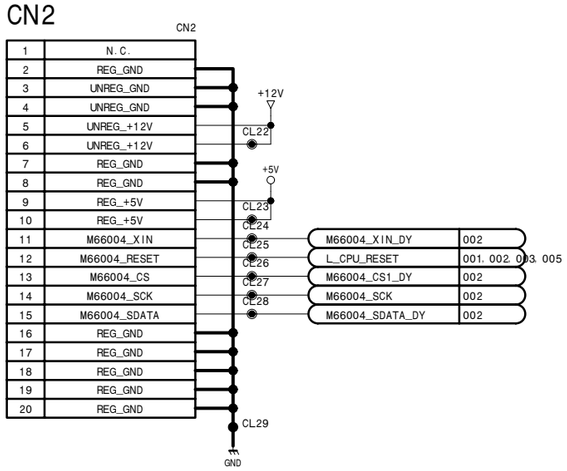

Operation panel

KY-484/484A (1/6)

BOARD NO. 1-679-121-12, 13
LOT NO. 064-
DSR-1800_KY-484_013_1

KY-484/484A (2/6)

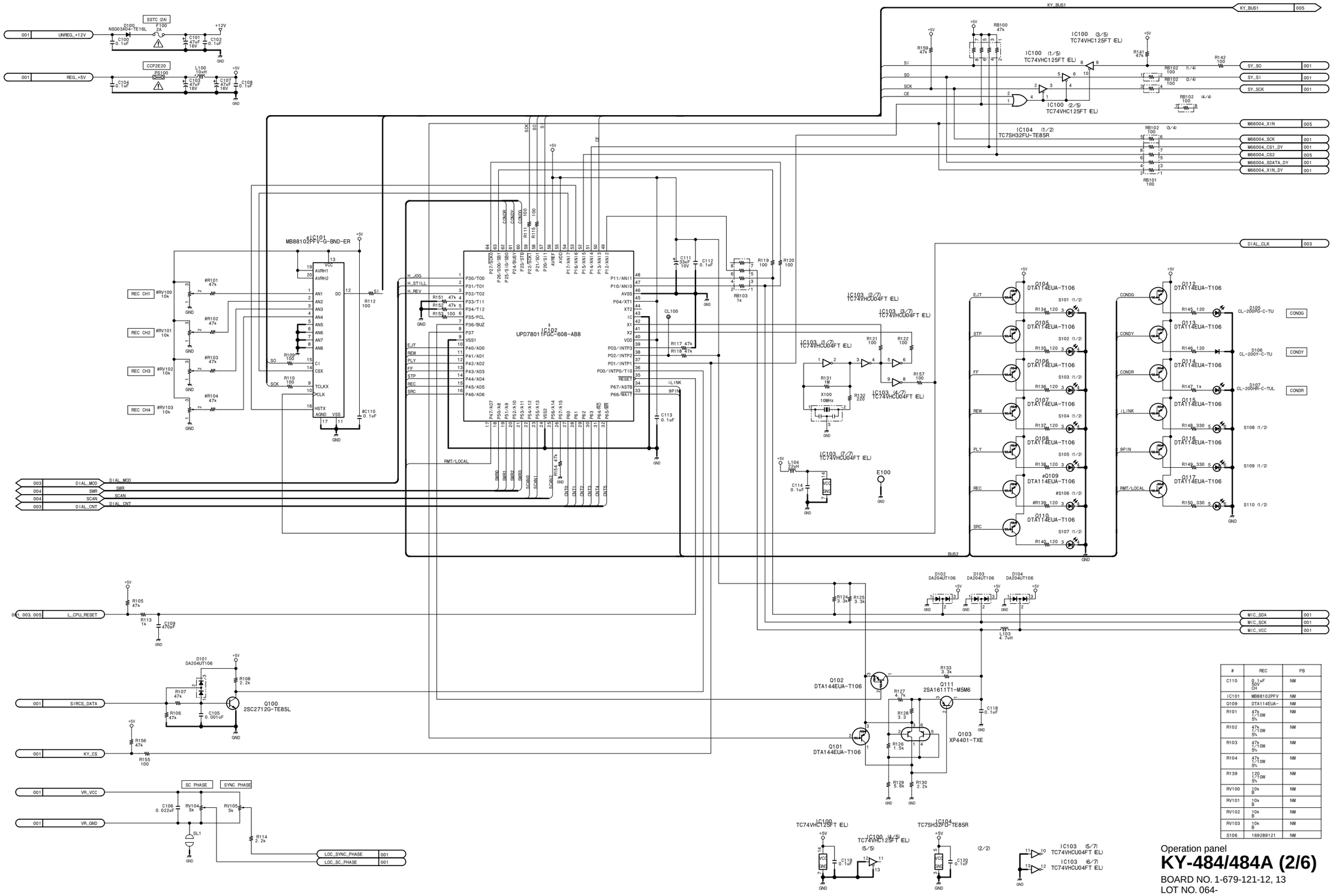

#	REC	PB
C110	0.1uF 50V CH	NM
IC101	MB88102PFV	NM
Q109	DTA114EUA-	NM
R101	47k 1/10W 5%	NM
R102	47k 1/10W 5%	NM
R103	47k 1/10W 5%	NM
R104	47k 1/10W 5%	NM
R139	120 1/10W 5%	NM
RV100	10k B	NM
RV101	10k B	NM
RV102	10k B	NM
RV103	10k B	NM
S106	169289121	NM

Operation panel

KY-484/484A (2/6)

BOARD NO. 1-679-121-12, 13
LOT NO. 064-

DSR-1800_KY-484_013_2

15-62

KY-484/484A (3/6)

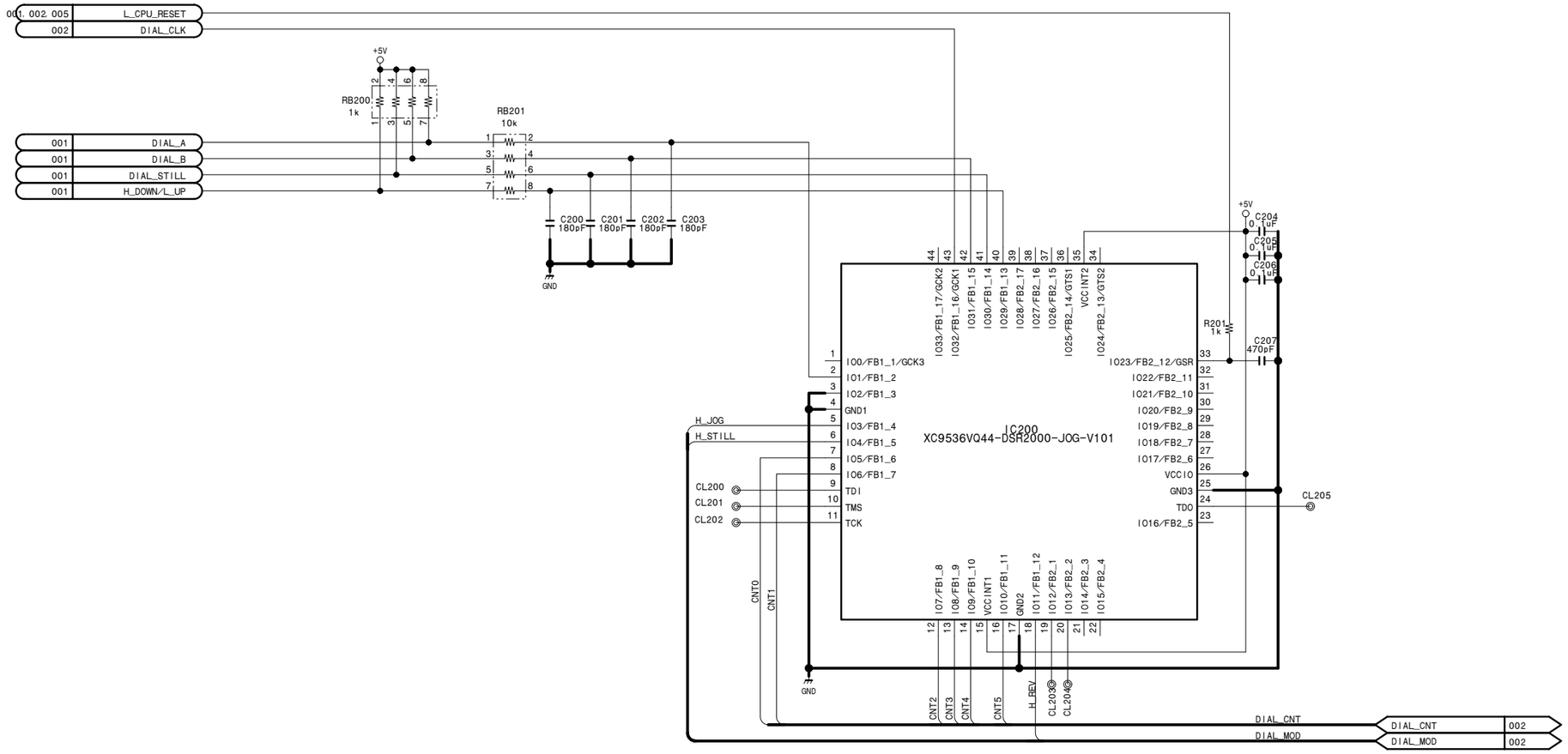

Operation panel

KY-484/484A (3/6)

BOARD NO. 1-679-121-12, 13
LOT NO. 064-
DSR-1800_KY-484_013_3

KY-484/484A (4/6)

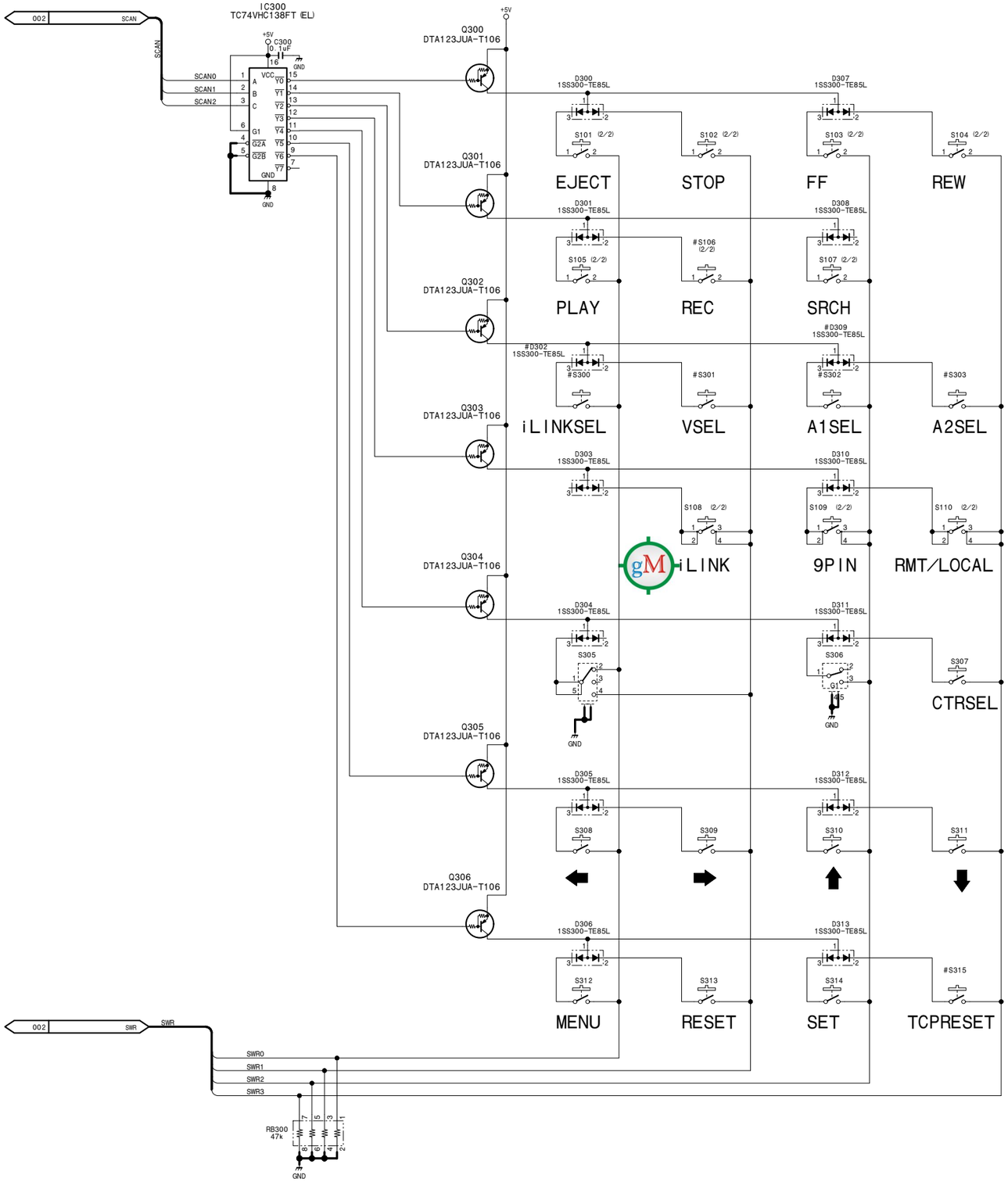

#	NTSC	PAL
D302	1SS300-TEB	NM
D309	1SS300-TEB	NM
S106	169289121	NM
S300	157197741	NM
S301	157197741	NM
S302	157197741	NM
S303	157197741	NM
S315	157197741	NM

Operation panel

KY-484/484A (4/6)

BOARD NO. 1-679-121-12, 13
LOT NO. 064-
DSR-1800_KY-484_013_4

15-64

KY-484/484A (5/6)

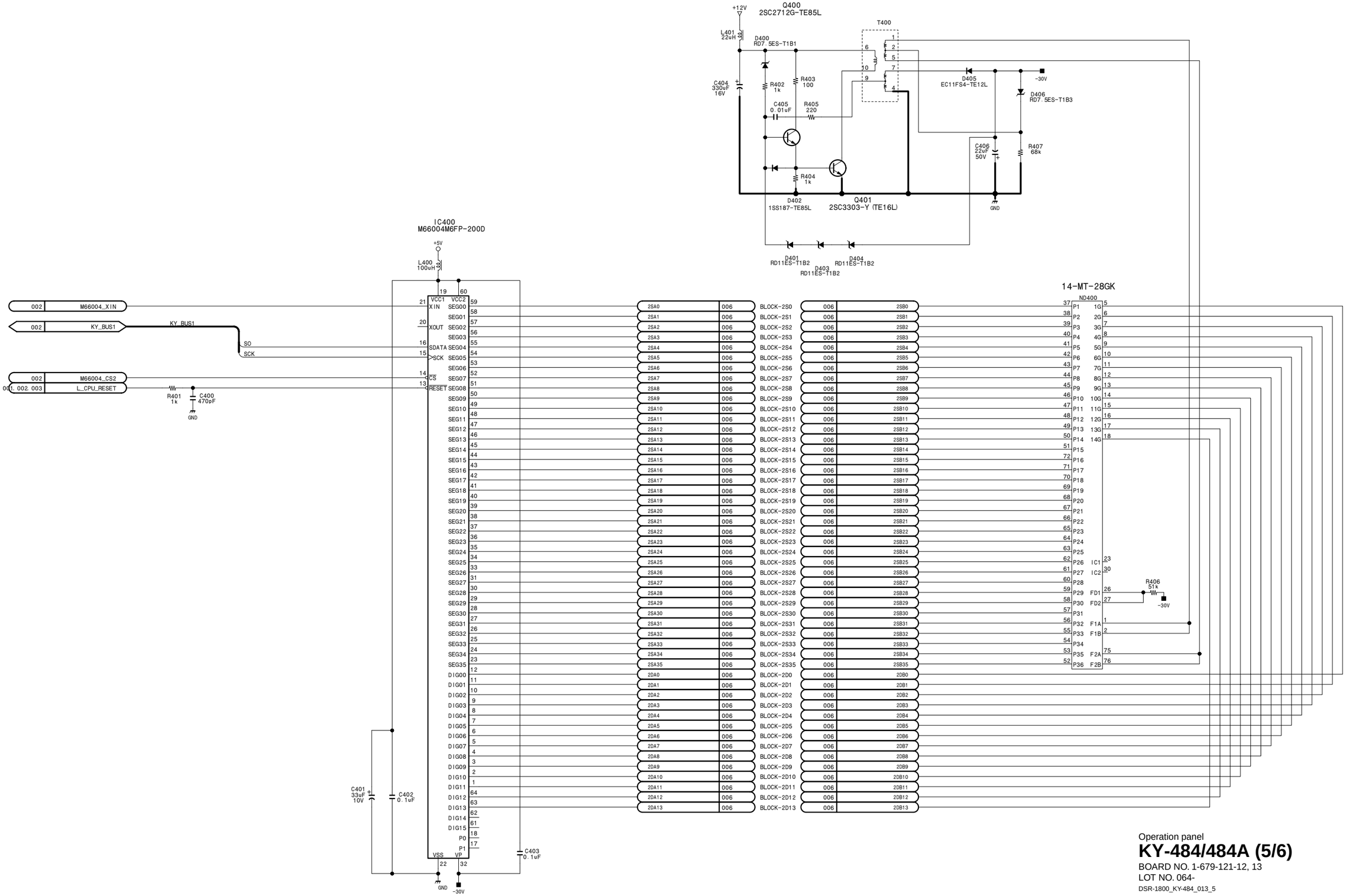

Operation panel

KY-484/484A (5/6)

BOARD NO. 1-679-121-12, 13
LOT NO. 064-
DSR-1800_KY-484_013_5

KY-484/484A (6/6)

Operation panel

KY-484/484A (6/6)

BOARD NO. 1-679-121-12, 13
LOT NO. 064-
DSR-1800_KY-484_013_6

MB-920 (1/5)

DPR-175/CN101

CN101

No.	NAME	I/O	LEVEL	DESTINATION
1	GND			
2	PB_CPCK	I	3V	RP-120
3	PB_SCSRC	O	3V	RP-120
4	PB_AVSRC	O	3V	RP-120
5	PB_ITISRC	O	3V	RP-120
6	PB_SCSYNP	I	3V	RP-120
7	PB_AVSYNP	I	3V	RP-120
8	PB_ITISYNP	I	3V	RP-120
9	GND			
10	PB_AVD4	I	3V	RP-120
11	PB_AVD3	I	3V	RP-120
12	PB_AVD2	I	3V	RP-120
13	PB_AVD1	I	3V	RP-120
14	PB_AVD0	I	3V	RP-120
15	PB_ISCD4	I	3V	RP-120
16	PB_ISCD3	I	3V	RP-120
17	PB_ISCD2	I	3V	RP-120
18	PB_ISCD1	I	3V	RP-120
19	PB_ISCD0	I	3V	RP-120
20	GND			
21	DELAY_O_SYNP	O	3V	RP-120
22	CLKDLY	O	3V	RP-120
23	GND			
24	ODD_CPCK	I	3V	RP-120
25	ODD_SYNP	I	3V	RP-120
26	ODD_DXI4	I	3V	RP-120
27	ODD_DXI3	I	3V	RP-120
28	ODD_DXI2	I	3V	RP-120
29	ODD_DXI1	I	3V	RP-120
30	ODD_DXI0	I	3V	RP-120
31	GND			
32	EVEN_CPCK	I	3V	RP-120
33	EVEN_SYNP	I	3V	RP-120
34	EVEN_DXI4	I	3V	RP-120
35	EVEN_DXI3	I	3V	RP-120
36	EVEN_DXI2	I	3V	RP-120
37	EVEN_DXI1	I	3V	RP-120
38	EVEN_DXI0	I	3V	RP-120
39	GND			
40	ODD_DXO0	O	3V	RP-120
41	ODD_DXO1	O	3V	RP-120
42	ODD_DXO2	O	3V	RP-120
43	ODD_DXO3	O	3V	RP-120
44	ODD_DXO4	O	3V	RP-120
45	ODD_CLKEN	O	3V	RP-120
46	ODD_RECA2	O	3V	RP-120
47	ODD_RECA1	O	3V	RP-120
48	GND			
49	ODD_CRCK	I	3V	RP-120
50	GND			
51	EVEN_DXO0	O	3V	RP-120
52	EVEN_DXO1	O	3V	RP-120
53	EVEN_DXO2	O	3V	RP-120
54	EVEN_DXO3	O	3V	RP-120
55	EVEN_DXO4	O	3V	RP-120
56	EVEN_CLKEN	O	3V	RP-120
57	EVEN_RECA2	O	3V	RP-120
58	EVEN_RECA1	O	3V	RP-120
59	GND			
60	EVEN_CRCK	I	3V	RP-120
61	GND			
62	DRCKREF	O	3V	RP-120
63	GND			
64	GND			
65	REG_+5V			
66	REG_+5V			
67	REG_+5V			
68	REG_+5V			
69	GND (REG)			
70	GND (REG)			
71	GND (REG)			
72	GND (REG)			
73	REG_+3.15V			
74	REG_+3.15V			
75	REG_+3.15V			
76	REG_+3.15V			
77	REG_+6V			
78	REG_+6V			
79	REG_+6V			
80	REG_+6V			
81	REG_-6V			
82	REG_-6V			
83	REG_-6V			
84	REG_-6V			
85	GND (REG)			
86	GND (REG)			
87	GND (REG)			
88	GND (REG)			
89	UNREG_+12V			
90	UNREG_+12V			
91	UNREG_+12V			
92	UNREG_+12V			
93	UNREG_-12V			
94	UNREG_-12V			
95	UNREG_-12V			
96	UNREG_-12V			
97	GND (UNREG)			
98	GND (UNREG)			
99	GND (UNREG)			
100	GND (UNREG)			

DPR-175/CN102

CN102

DESTINATION	LEVEL	I/O	No.	NAME	No.	NAME	I/O	LEVEL	DESTINATION
RP-120	3V	O	1	PRE_SEL	2	PLLSRC	O	3V	RP-120
RP-120	3V	O	3	PLLFRP	4	GND			
RP-120	3V	O	5	EVEN_ITISRC	6	VIT_OFF	O	3V	RP-120
RP-120	3V	O	7	BSC_ON	8	ME	O	3V	RP-120
			9	GND	10	EVEN_SWP	I	3V	RP-120. SSP-24. T.P.JIG
RP-120. T.P.JIG	3V	I	11	ODD_SWP	12	REC_SWP	I	3V	RP-120. SSP-24
			13	GND	14	TRKT1-R	O	3V	RP-120
RP-120	3V	O	15	FLTT1-R	16	TRKT1-P	O	3V	RP-120
RP-120	3V	O	17	FLTT1-P	18	GND			
			19	GND	20	FE_CLKEN	O	3V	RP-120
RP-120	3V	O	21	FE_STBY	22	FE_SWP	I	3V	RP-120
RP-120	3V	O	23	ODD_AVAREA	24	ODD_SCAREA	O	3V	RP-120
RP-120	3V	O	25	EVEN_AVAREA	26	EVEN_SCAREA	O	3V	RP-120
			27	GND	28	ADY0	I	3V	VPR-71
VPR-71	3V	I	29	ADY1	30	ADY2	I	3V	VPR-71
			31	GND	32	ADY3	I	3V	VPR-71
VPR-71	3V	I	33	ADY4	34	ADY5	I	3V	VPR-71
			35	GND	36	ADY6	I	3V	VPR-71
VPR-71	3V	I	37	ADY7	38	ADY8	I	3V	VPR-71
			39	GND	40	ADY9	I	3V	VPR-71
VPR-71	3V	I	41	ADC0	42	ADC1	I	3V	VPR-71
			43	GND	44	ADC2	I	3V	VPR-71
VPR-71	3V	I	45	ADC3	46	ADC4	I	3V	VPR-71
			47	GND	48	ADC5	I	3V	VPR-71
VPR-71	3V	I	49	ADC6	50	ADC7	I	3V	VPR-71
			51	GND	52	ADC8	I	3V	VPR-71
VPR-71	3V	I	53	ADC9	54	AD_CK13	O	3V	VPR-71
			55	GND	56	Y_CLAMP	O	3V	VPR-71
VPR-71	3V	O	57	C_CLAMP	58	N.C			
			59	GND	60	JSYC	O	3V	VPR-71
VPR-71	3V	I	61	AFC_OE	62	AFC_HD	I	3V	VPR-71
			63	GND	64	AFC_VD	I	3V	VPR-71
VPR-71	3V	I	65	AFC_CK13D	66	GND			
SSP-24	3V	I	67	AU_REC_DT12	68	AU_REC_DT34	I	3V	SSP-24
SSP-24	3V	O	69	REC_LRCK	70	REC_BCK	O	3V	SSP-24
SSP-24	3V	O	71	REC_256FS	72	GND			
SSP-24	3V	O	73	CH1_IN_LEVEL_SEL1	74	CH1_IN_LEVEL_SEL2	O	3V	SSP-24
SSP-24	3V	O	75	CH2_IN_LEVEL_SEL1	76	CH2_IN_LEVEL_SEL2	O	3V	SSP-24
			77	GND	78	CH3_IN_LEVEL_SEL1	O	3V	SSP-24
SSP-24	3V	O	79	CH3_IN_LEVEL_SEL2	80	CH4_IN_LEVEL_SEL1	O	3V	SSP-24
SSP-24	3V	O	81	CH4_IN_LEVEL_SEL2	82	HEAD_ROOM_SEL1	O	3V	SSP-24
SSP-24	3V	O	83	HEAD_ROOM_SEL2	84	XLR_OUT_LEVEL_SEL1	O	3V	SSP-24
SSP-24	3V	O	85	XLR_OUT_LEVEL_SEL2	86	SDIP_DT12	O	3V	SSP-24
SSP-24	3V	O	87	SDIP_DT34	88	MONI_DT	O	3V	SSP-24
SSP-24	3V	O	89	DA_LRCK	90	DA_BCK	O	3V	SSP-24
SSP-24	3V	O	91	DA_256FS	92	SGCK13	O	3V	VPR-71
VPR-71	3V	O	93	SGH	94	SGOE	O	3V	VPR-71
			95	GND	96	SDIRF	O	3V	VPR-71
VPR-71	3V	O	97	SDIRCK27V	98	SDIRV	O	3V	VPR-71
			99	GND	100	SDIRH	O	3V	VPR-71
VPR-71	3V	O	101	SDTIRF	102	SDTICK27	O	3V	VPR-71
			103	GND	104	SDTIRV	O	3V	VPR-71
VPR-71	3V	O	105	SDTIRH	106	NSG_OFOE	I	3V	VPR-71
			107	GND	108	NSG_FH	I	3V	VPR-71
VPR-71	3V	I	109	NSG_TOFOE	110	NSG_TFH	I	3V	VPR-71
			111	GND	112	NSG_VD	I	3V	VPR-71
VPR-71	3V	I	113	NSG_HD	114	NSG_JOE	I	3V	VPR-71
			115	GND	116	NSG_CK13D	I	3V	VPR-71
VPR-71	3V	I	117	NSG_CK27D	118	GND			
VPR-71	3V	O	119	DAC9	120	DAC8	O	3V	VPR-71
VPR-71	3V	O	121	DAC7	122	GND			
VPR-71	3V	O	123	DAC6	124	DAC5	O	3V	VPR-71
VPR-71	3V	O	125	DAC4	126	GND			
VPR-71	3V	O	127	DAC3	128	DAC2	O	3V	VPR-71
VPR-71	3V	O	129	DAC1	130	GND			
VPR-71	3V	O	131	DAC0	132	DA_CK13	O	3V	VPR-71
			133	N.C	134	GND			
VPR-71	3V	O	135	DAY9	136	DAY8	O	3V	VPR-71
VPR-71	3V	O	137	DAY7	138	GND			
VPR-71	3V	O	139	DAY6	140	DAY5	O	3V	VPR-71
VPR-71	3V	O	141	DAY4	142	GND			
VPR-71	3V	O	143	DAY3	144	DAY2	O	3V	VPR-71
VPR-71	3V	O	145	DAY1	146	GND			
VPR-71	3V	O	147	DAY0	148	LBY	O	3V	VPR-71

DPR-175/CN103

CN103

No.	NAME	I/O	LEVEL	DESTINATION
1	SV_SO1	I	3V	SSP-24
2	SV_SI1	O	3V	SSP-24
3	SV_SCK1	I	3V	SSP-24
4	D1R_J_SWP	I	5V	SSP-24
5	HIF_CS	I	3V	SSP-24
6	D1R_MCS	I	3V	SSP-24
7	D1P_MCS	I	3V	SSP-24
8	SV_SO2	I	3V	SSP-24
9	SV_SI2	O	3V	SSP-24
10	SV_SCK2	I	3V	SSP-24
11	FLTD-R	O	3V	SSP-24
12	FLTD-P	O	3V	SSP-24
13	C1P_SCS	I	3V	SSP-24
14	C1P_MCS	I	3V	SSP-24
15	GND			
16	SP_R_SI	O	3V	SSP-24
17	SP_R_SO	I	3V	SSP-24
18	SP_R_SCK	I	3V	SSP-24
19	GND			
20	C1R_SCS	I	3V	SSP-24
21	GND			
22	C1R_MCS	I	3V	SSP-24
23	DV_CS	I	3V	SSP-24
24	SY_SI_3V	O	3V	SSP-24
25	SY_SO_3V	I	3V	SSP-24
26	GND			
27	SY_SCK_3V	I	3V	SSP-24
28	N.C			
29	GND			
30	N.C			
31	SY_SCK	I	5V	SSP-24. VPR-71. KY-484
32	CPU_RESET	I	5V	SSP-24. VPR-71. RP-120. KY-484
33	GND			
34	JC_RESET	I	5V	SSP-24. VPR-71. RP-120
35	C1_RESET	I	5V	SSP-24
36	PLD_RESET	I	5V	SSP-24
37	GND			
38	P-FLTT	O	3V	SSP-24
39	R-FLTT	O	3V	SSP-24
40	P-TRKT	O	3V	SSP-24
41	GND			
42	R-TRKT	O	3V	SSP-24
43	SDI_Exist	O	3V	SSP-24
44	DV_Exist	O	3V	SSP-24
45	GND			
46	TBC_RE	O	5V	SSP-24
47	FRRE	O	5V	SSP-24
48	BANK	O	5V	SSP-24
49	GND			
50	CTL	O	5V	SSP-24
51	CNT_SEL	O	3V	SSP-24
52	BANK_CNT	I	5V	SSP-24
53	GND			
54	REN_CNT	I	5V	SSP-24
55	XHORD	I	3V	SSP-24
56	XHDWR	I	3V	SSP-24
57	GND			
58	XHDCS3	I	3V	SSP-24
59	XHDCS2	I	3V	SSP-24
60	XHDCS1	I	3V	SSP-24
61	HRDY3	I	3V	SSP-24
62	HRDY2	I	3V	SSP-24
63	HRDY1	I	3V	SSP-24
64	HD7	I	3V	SSP-24
65	HD6	I	3V	SSP-24
66	HD5	I	3V	SSP-24
67	HD4	I	3V	SSP-24
68	HD3	I	3V	SSP-24
69	HD2	I	3V	SSP-24
70	HD1	I	3V	SSP-24
71	HD0	I	3V	SSP-24
72	HA0	I	3V	SSP-24
73	GND			
74	AIFP_CS	I	3V	SSP-24
75	SIFP_CS	I	3V	SSP-24
76	SIFE_CS	I	3V	SSP-24
77	F1P_CS	I	3V	SSP-24
78	GND			
79	V2P_CS	I	3V	SSP-24
80	D1P_TCS	I	3V	SSP-24
81	D1P_FCS	I	3V	SSP-24
82	SP_P_SI	O	3V	SSP-24
83	SP_P_SO	I	3V	SSP-24
84	SP_P_SCK	I	3V	SSP-24
85	GND			
86	ACTL_CS	I	3V	SSP-24
87	AIFI_CS	I	3V	SSP-24
88	A1R_TCS	I	3V	SSP-24
89	A1R_FCS	I	3V	SSP-24
90	GND			
91	A1F_TCS	I	3V	SSP-24
92	A1F_FCS	I	3V	SSP-24
93	SIFR_CS	I	3V	SSP-24
94	F1R_CS	I	3V	SSP-24
95	V2R_CS	I	3V	SSP-24
96	D1R_TCS	I	3V	SSP-24
97	D1R_FCS	I	3V	SSP-24
98	SDI_CS	I	3V	SSP-24
99	DIF_CS	I	3V	SSP-24
100	AUDIO_OUT_MUTE	O	5V	SSP-24. HP-108

Mother board

MB-920 (1/5)

BOARD NO. 1-679-114-11

LOT NO. 064-

DSR-1800_MB-920_111_1

MB-920 (2/5)

VPR-71/CN104 CN104

No.	NAME	I/O	LEVEL	DESTINATION
1	GND			
2	ADY0	O	3V	DPR-175
3	ADY1	O	3V	DPR-175
4	ADY2	O	3V	DPR-175
5	GND			
6	ADY3	O	3V	DPR-175
7	ADY4	O	3V	DPR-175
8	ADY5	O	3V	DPR-175
9	GND			
10	ADY6	O	3V	DPR-175
11	ADY7	O	3V	DPR-175
12	ADY8	O	3V	DPR-175
13	GND			
14	ADY9	O	3V	DPR-175
15	ADC0	O	3V	DPR-175
16	ADC1	O	3V	DPR-175
17	GND			
18	ADC2	O	3V	DPR-175
19	ADC3	O	3V	DPR-175
20	ADC4	O	3V	DPR-175
21	GND			
22	ADC5	O	3V	DPR-175
23	ADC6	O	3V	DPR-175
24	ADC7	O	3V	DPR-175
25	GND			
26	ADC8	O	3V	DPR-175
27	ADC9	O	3V	DPR-175
28	AD_CK13	I	3V	DPR-175
29	GND			
30	Y_CLAMP	I	3V	DPR-175
31	C_CLAMP	I	3V	DPR-175
32	N.C			
33	GND			
34	JSYC	I	3V	DPR-175
35	AFC_OE	O	3V	DPR-175
36	AFC_HD	O	3V	DPR-175
37	GND			
38	AFC_VD	O	3V	DPR-175
39	AFC_CK13D	O	3V	DPR-175
40	N.C			
41	GND			
42	RTG_STB	I	5V	SSP-24
43	N.C			
44	N.C			
45	GND			
46	N.C			
47	N.C			
48	N.C			
49	GND			
50	GND			
51	GND			
52	N.C			
53	GND			
54	GND			
55	GND			
56	N.C			
57	GND			
58	GND			
59	GND			
60	GND			
61	GND			
62	GND			
63	GND			
64	GND			
65	REG_+5V			
66	REG_+5V			
67	REG_+5V			
68	REG_+5V			
69	GND (REG)			
70	GND (REG)			
71	GND (REG)			
72	GND (REG)			
73	REG_+3.15V			
74	REG_+3.15V			
75	REG_+3.15V			
76	REG_+3.15V			
77	REG_+6V			
78	REG_+6V			
79	REG_+6V			
80	REG_+6V			
81	REG_-6V			
82	REG_-6V			
83	REG_-6V			
84	REG_-6V			
85	GND (REG)			
86	GND (REG)			
87	GND (REG)			
88	GND (REG)			
89	UNREG_+12V			
90	UNREG_+12V			
91	UNREG_+12V			
92	UNREG_+12V			
93	UNREG_-12V			
94	UNREG_-12V			
95	UNREG_-12V			
96	UNREG_-12V			
97	GND (UNREG)			
98	GND (UNREG)			
99	GND (UNREG)			
100	GND (UNREG)			

VPR-71/CN105 CN105

No.	NAME	I/O	LEVEL	DESTINATION
1	GND			
2	NSG_OE	O	5V	SSP-24
3	NSG_CS	I	5V	SSP-24
4	NCG_CS	I	5V	SSP-24
5	GND			
6	VPR_AD_CS	I	5V	SSP-24
7	SY_SI	O	5V	SSP-24, KY-484
8	SY_SO	I	5V	SSP-24, KY-484
9	GND			
10	SY_SCK	I	5V	SSP-24, DPR-175, KY-484
11	CPU_RESET	I	5V	SSP-24, DPR-175, RP-120, KY-484
12	JC_RESET	I	5V	SSP-24, DPR-175, RP-120
13	GND			
14	N.C			
15	N.C			
16	N.C			
17	GND			
18	SGCK13	I	3V	SSP-24
19	SGH	I	3V	SSP-24
20	SGOE	I	3V	SSP-24
21	GND			
22	SDIRF	I	3V	DPR-175
23	SDIRCK27V	I	3V	DPR-175
24	SDIRV	I	3V	DPR-175
25	GND			
26	SDIRH	I	3V	DPR-175
27	SDTIRF	I	3V	DPR-175
28	SDTICK27	I	3V	DPR-175
29	GND			
30	SDTIRV	I	3V	DPR-175
31	SDTIRH	I	3V	DPR-175
32	NSG_OFOE	O	3V	DPR-175
33	GND			
34	NSG_FH	O	3V	DPR-175
35	NSG_TOFOE	O	3V	DPR-175
36	NSG_TFH	O	3V	DPR-175
37	GND			
38	NSG_VD	O	3V	DPR-175
39	NSG_HD	O	3V	DPR-175
40	NSG_JOE	O	3V	DPR-175
41	GND			
42	NSG_CK13D	O	3V	DPR-175
43	NSG_CK27D	O	3V	DPR-175
44	N.C			
45	GND			
46	DAC9	I	3V	DPR-175
47	DAC8	I	3V	DPR-175
48	DAC7	I	3V	DPR-175
49	GND			
50	DAC6	I	3V	DPR-175
51	DAC5	I	3V	DPR-175
52	DAC4	I	3V	DPR-175
53	GND			
54	DAC3	I	3V	DPR-175
55	DAC2	I	3V	DPR-175
56	DAC1	I	3V	DPR-175
57	GND			
58	DAC0	I	3V	DPR-175
59	DA_CK13	I	3V	DPR-175
60	N.C			
61	GND			
62	DAY9	I	3V	DPR-175
63	DAY8	I	3V	DPR-175
64	DAY7	I	3V	DPR-175
65	GND			
66	DAY6	I	3V	DPR-175
67	DAY5	I	3V	DPR-175
68	DAY4	I	3V	DPR-175
69	GND			
70	DAY3	I	3V	DPR-175
71	DAY2	I	3V	DPR-175
72	DAY1	I	3V	DPR-175
73	GND			
74	DAY0	I	3V	DPR-175
75	LBY	I	3V	DPR-175
76	N.C			
77	GND			
78	INPUT_LTC (X)	O	A	SSP-24
79	INPUT_LTC (G)		G	SSP-24
80	N.C			
81	GND			
82	OUTPUT_LTC (X)	I	A	SSP-24
83	OUTPUT_LTC (G)		G	SSP-24
84	N.C			
85	GND			
86	LOC_SYNC_PHASE	I	0-5V	KY-484
87	LOC_SC_PHASE	I	0-5V	KY-484
88	VR_VCC	O	5V	KY-484
89	VR_GND	O	G	KY-484
90	GND			
91	GND			
92	N.C			
93	GND			
94	GND			
95	GND			
96	GND			
97	GND			
98	GND			
99	GND			
100	GND			

Mother board
MB-920 (2/5)
BOARD NO. 1-679-114-11
LOT NO. 064-
DSR-1800_MB-920_111_2

15-68

http://getMANUAL.com

MB-920 (3/5)

SSP-24/CN106

CN106

No.	NAME	I/O	LEVEL	DESTINATION
1	GND			
2	AU_REC_DT12	O	5V	DPR-175
3	GND			
4	AU_REC_DT34	O	5V	DPR-175
5	GND			
6	REC_LRCK	I	3V	DPR-175
7	REC_BCK	I	3V	DPR-175
8	REC_256FS	I	3V	DPR-175
9	GND			
10	CH1_IN_LEVEL_SEL1	I	3V	DPR-175
11	CH1_IN_LEVEL_SEL2	I	3V	DPR-175
12	CH2_IN_LEVEL_SEL1	I	3V	DPR-175
13	GND			
14	CH2_IN_LEVEL_SEL2	I	3V	DPR-175
15	CH3_IN_LEVEL_SEL1	I	3V	DPR-175
16	CH3_IN_LEVEL_SEL2	I	3V	DPR-175
17	GND			
18	CH4_IN_LEVEL_SEL1	I	3V	DPR-175
19	CH4_IN_LEVEL_SEL2	I	3V	DPR-175
20	HEAD_ROOM_SEL1	I	3V	DPR-175
21	GND			
22	HEAD_ROOM_SEL2	I	3V	DPR-175
23	XLR_OUT_LEVEL_SEL1	I	3V	DPR-175
24	XLR_OUT_LEVEL_SEL2	I	3V	DPR-175
25	GND			
26	SDIP_DT12	I	3V	DPR-175
27	SDIP_DT34	I	3V	DPR-175
28	MONI_DT	I	3V	DPR-175
29	GND			
30	DA_LRCK	I	3V	DPR-175
31	DA_BCK	I	3V	DPR-175
32	DA_256FS	I	3V	DPR-175
33	GND			
34	GND			
35	GND			
36	GND			
37	HP_L_OUT (G)		G	HP-108
38	HP_L_OUT (X)	O	A	HP-108
39	HP_R_OUT (G)		G	HP-108
40	HP_R_OUT (X)	O	A	HP-108
41	GND			
42	H-MOTOR_OFF	O	5V	RP-120
43	LOADING_SENSOR1	I	3V	RP-120
44	LOADING_SENSOR2	I	3V	RP-120
45	GND			
46	LOADING_FG	I	3V	DR-428
47	L/C-MOTOR_DRIVE	O	A	DR-428
48	L/C-MOTOR_CONT1	O	5V	DR-428
49	GND			
50	L/C-MOTOR_CONT2	O	5V	DR-428
51	L-SOL. POWER_OFF	O	5V	DR-428
52	SV-DR_SCK	O	3V	DR-428
53	GND			
54	SV-DR_SO	O	3V	DR-428
55	SV-DR_SI	I	3V	DR-428
56	DR_SCOM_CS	O	3V	DR-428
57	GND			
58	SV_EEPROM_CS	O	3V	DR-428
59	DR_SCOM_BUSY	I	3V	DR-428
60	SV_EEPROM_BUSY	I	3V	DR-428
61	GND			
62	CAPSTAN_FG_A	I	5V	DR-428
63	CAPSTAN_FG_B	I	5V	DR-428
64	L-CAPSTAN_POWER_OFF	O	5V	DR-428
65	REG_+5V			
66	REG_+5V			
67	REG_+5V			
68	REG_+5V			
69	GND (REG)			
70	GND (REG)			
71	GND (REG)			
72	GND (REG)			
73	REG_+3.15V			
74	REG_+3.15V			
75	REG_+3.15V			
76	REG_+3.15V			
77	REG_+6V			
78	REG_+6V			
79	REG_+6V			
80	REG_+6V			
81	REG_-6V			
82	REG_-6V			
83	REG_-6V			
84	REG_-6V			
85	GND (REG)			
86	GND (REG)			
87	GND (REG)			
88	GND (REG)			
89	UNREG_+12V			
90	UNREG_+12V			
91	UNREG_+12V			
92	UNREG_+12V			
93	UNREG_-12V			
94	UNREG_-12V			
95	UNREG_-12V			
96	UNREG_-12V			
97	GND (UNREG)			
98	GND (UNREG)			
99	GND (UNREG)			
100	GND (UNREG)			

SSP-24/CN107

CN107

DESTINATION	LEVEL	I/O	No.	NAME	No.	NAME	I/O	LEVEL	DESTINATION
DR-428	A	O	1	CAPSTAN_DRIVE	2	CAPSTAN_DIR_CMD	O	5V	DR-428
DR-428	5V	I	3	T-REEL_FG_A	4	T-REEL_FG_B	I	5V	DR-428
			5	GND	6	L-T-REEL_POWER_OFF	O	5V	DR-428
DR-428	A	O	7	T-REEL_DRIVE	8	T-REEL_DIR_CMD	O	5V	DR-428
			9	GND	10	L/C-MOTOR_CONT3	O	5V	DR-428
DR-428	5V	O	11	L-DRUM_POWER_OFF	12	CAPSTAN_CURRENT	I	A	DR-428
			13	GND	14	S-REEL_FG_A	I	5V	DR-428
DR-428	5V	I	15	S-REEL_FG_B	16	L-S-REEL_POWER_OFF	O	5V	DR-428
			17	GND	18	S-REEL_DRIVE	O	A	DR-428
DR-428	5V	O	19	S-REEL_DIR_CMD	20	SV_1/2_VD	O	3V	DR-428
			21	GND	22	REF_+5V	O	5V	DR-428
DR-428	A	I	23	S-TENSION	24	H-FAN_MOTOR_STOP	O	5V	DR-428
			25	GND	26	REC_SWP	I	3V	DPR-175, RP-120
DPR-175, RP-120, T.P.JIG	3V	I	27	EVEN_SWP	28	SV_SO1	O	3V	DPR-175
			29	GND	30	SV_SI1	I	3V	DPR-175
DPR-175	3V	O	31	SV_SCK1	32	D1R_J_SWP	O	5V	DPR-175
			33	GND	34	HIF_CS	O	3V	DPR-175
DPR-175	3V	O	35	D1R_MCS	36	D1P_MCS	O	3V	DPR-175
			37	GND	38	SV_SO2	O	3V	DPR-175
DPR-175	3V	I	39	SV_SI2	40	SV_SCK2	O	3V	DPR-175
			41	GND	42	FLTD-R	I	3V	DPR-175
DPR-175	3V	I	43	FLTD-P	44	C1P_SCS	O	3V	DPR-175
			45	GND	46	C1P_MCS	O	3V	DPR-175
DPR-175	3V	I	47	SP_R_SI	48	SP_R_SO	O	3V	DPR-175
			49	GND	50	SP_R_SCK	O	3V	DPR-175
DPR-175	3V	O	51	C1R_SCS	52	C1R_MCS	O	3V	DPR-175
			53	GND	54	DV_CS	O	3V	DPR-175
DPR-175	3V	I	55	SY_SI_3V	56	SY_SO_3V	O	3V	DPR-175
			57	GND	58	SY_SCK_3V	O	3V	DPR-175
VPR-71, KY-484	5V	O	59	SY_SO	60	SY_SI	I	5V	VPR-71, KY-484
			61	GND	62	SY_SCK	O	5V	DPR-175, VPR-71, KY-484
DPR-175, RP-120, KY-484, VPR-71	5V	O	63	CPU_RESET	64	JC_RESET	O	5V	DPR-175, RP-120, VPR-71
			65	GND	66	C1_RESET	O	5V	DPR-175
DPR-175	5V	O	67	PLD_RESET	68	P-FLTT	I	3V	DPR-175
			69	GND	70	R-FLTT	I	3V	DPR-175
DPR-175	3V	I	71	P-TRKT	72	R-TRKT	I	3V	DPR-175
			73	GND	74	NSG_OE	O	5V	VPR-71
DPR-175	3V	I	75	SDI_Exist	76	DV_Exist	I	3V	DPR-175
			77	GND	78	TBC_RE	I	5V	DPR-175
DPR-175	5V	I	79	FRRE	80	BANK	I	5V	DPR-175
			81	GND	82	CTL	I	5V	DPR-175
DPR-175	3V	I	83	CNT_SEL	84	BANK_CNT	O	5V	DPR-175
			85	GND	86	REN_CNT	O	5V	DPR-175
DPR-175	3V	O	87	XHDRD	88	XHDWR	O	3V	DPR-175
			89	GND	90	XHDCS3	O	3V	DPR-175
DPR-175	3V	O	91	XHDCS2	92	XHDCS1	O	3V	DPR-175
			93	GND	94	HRDY3	O	3V	DPR-175
DPR-175	3V	O	95	HRDY2	96	HRDY1	O	3V	DPR-175
			97	GND	98	HD7	O	3V	DPR-175
DPR-175	3V	O	99	HD6	100	HD5	O	3V	DPR-175
			101	GND	102	HD4	O	3V	DPR-175
DPR-175	3V	O	103	HD3	104	HD2	O	3V	DPR-175
			105	GND	106	HD1	O	3V	DPR-175
DPR-175	3V	O	107	HD0	108	HA0	O	3V	DPR-175
			109	GND	110	AIFP_CS	O	3V	DPR-175
DPR-175	3V	O	111	SIFP_CS	112	SIFE_CS	O	3V	DPR-175
			113	GND	114	F1P_CS	O	3V	DPR-175
DPR-175	3V	O	115	V2P_CS	116	D1P_TCS	O	3V	DPR-175
			117	GND	118	D1P_FCS	O	3V	DPR-175
DPR-175	3V	I	119	SP_P_SI	120	SP_P_SO	O	3V	DPR-175
			121	GND	122	SP_P_SCK	O	3V	DPR-175
DPR-175	3V	O	123	ACTL_CS	124	AIF1_CS	O	3V	DPR-175
			125	GND	126	A1R_TCS	O	3V	DPR-175
DPR-175	3V	O	127	A1R_FCS	128	A1F_TCS	O	3V	DPR-175
			129	GND	130	A1F_FCS	O	3V	DPR-175
DPR-175	3V	O	131	SIFR_CS	132	F1R_CS	O	3V	DPR-175
			133	GND	134	V2R_CS	O	3V	DPR-175
DPR-175	3V	O	135	D1R_TCS	136	D1R_FCS	O	3V	DPR-175
			137	SDI_CS	138	DIF_CS	O	3V	DPR-175
DPR-175, HP-108	5V	O	139	AUDIO_OUT_MUTE	140	RTG_STB	O	5V	VPR-71
VPR-71	5V	O	141	VPR_AD_CS	142	NSG_CS	O	5V	VPR-71
VPR-71	5V	O	143	NCG_CS	144	KY_CS	O	5V	KY-484
VPR-71	G		145	OUTPUT_LTC (G)	146	OUTPUT_LTC (X)	O	A	VPR-71
VPR-71	G		147	INPUT_LTC (G)	148	INPUT_LTC (X)	I	A	VPR-71

KY-484/CN108

CN108

No.	NAME	I/O	LEVEL	DESTINATION
1	GND (UNREG)			
2	GND (UNREG)			
3	GND (UNREG)			
4	GND (UNREG)			
5	UNREG_+12V			
6	UNREG_+12V			
7	UNREG_+12V			
8	UNREG_+12V			
9	GND (REG)			
10	GND (REG)			
11	GND (REG)			
12	GND (REG)			
13	GND			
14	REG_+5V			
15	REG_+5V			
16	REG_+5V			
17	LOC_SC_PHASE	O	0-5V	VPR-71
18	LOC_SYNC_PHASE	O	0-5V	VPR-71
19	VR_VCC	I	5V	VPR-71
20	VR_GND	I	G	VPR-71
21	MIC_GND	O	G	RP-120
22	MIC_SCK	O	5V	RP-120
23	MIC_SDA	I/O	5V	RP-120
24	MIC_VCC	O	5V	RP-120
25	SY_SCK	I	5V	SSP-24, DPR-175, VPR-71
26	SY_SI	O	5V	SSP-24, VPR-71
27	SY_SO	I	5V	SSP-24, VPR-71
28	KY_CS	I	5V	SSP-24
29	CPU_RESET	I	5V	SSP-24, DPR-175, VPR-71
30	SIRCS_DATA	I	5V	HP-108

HP-108/CN109

CN109

No.	NAME	I/O	LEVEL	DESTINATION
1	SIRCS_DATA	O	5V	KY-484
2	REG_-6V			
3	REG_+6V			
4	REG_+5V			
5	GND (REG)			
6	GND (REG)			
7	GND (REG)			
8	HP_L_OUT (X)	I	A	SSP-24
9	HP_L_OUT (G)		G	SSP-24
10	HP_R_OUT (X)	I	A	SSP-24
11	HP_R_OUT (G)		G	SSP-24
12	AUDIO_OUT_MUTE	I	5V	SSP-24, DPR-175

Mother board
MB-920 (3/5)
BOARD NO. 1-679-114-11
LOT NO. 064-
DSR-1800_MB-920_111_3

MB-920 (4/5)

RP_120/CN200

CN200

DESTINATION	LEVEL	I/O	No.	NAME
			1	GND
			2	GND
DPR-175	3V	I	3	PLLFRP
DPR-175	3V	I	4	PLLSRC
DPR-175	3V	I	5	PRE_SEL
DPR-175	3V	I	6	CLKDLY
DPR-175	3V	I	7	DELAY_O_SYNP
			8	GND
DPR-175	3V	O	9	PB_ISCD0
DPR-175	3V	O	10	PB_ISCD1
DPR-175	3V	O	11	PB_ISCD2
DPR-175	3V	O	12	PB_ISCD3
DPR-175	3V	O	13	PB_ISCD4
DPR-175	3V	O	14	PB_AVD0
DPR-175	3V	O	15	PB_AVD1
DPR-175	3V	O	16	PB_AVD2
DPR-175	3V	O	17	PB_AVD3
DPR-175	3V	O	18	PB_AVD4
			19	GND
DPR-175	3V	O	20	PB_ITISYNP
DPR-175	3V	O	21	PB_AVSYNP
DPR-175	3V	O	22	PB_SCSYNP
DPR-175	3V	I	23	PB_ITISRC
DPR-175	3V	I	24	PB_AVSRC
DPR-175	3V	I	25	PB_SCSRC
DPR-175	3V	O	26	PB_CPCK
			27	GND
			28	REG_+5V
			29	REG_+5V
			30	REG_+5V
			31	REG_+5V
			32	REG_+5V
			33	REG_+5V
			34	REG_+6V
			35	REG_+6V
			36	REG_+6V
			37	REG_+6V
			38	REG_+6V
			39	REG_+6V
			40	GND (REG)
			41	GND (REG)
			42	GND (REG)
			43	GND (REG)
			44	GND (REG)
			45	GND (REG)

"1"49"48"47"46

RP_120/CN201

CN201

DESTINATION	LEVEL	I/O	No.	NAME
			1	GND
DPR-175	3V	O	2	FE_SWP
DPR-175, SSP-24	3V	O	3	REC_SWP
DPR-175	3V	I	4	FLTT1-P
DPR-175	3V	I	5	TRKT1-P
DPR-175	3V	I	6	FLTT1-R
DPR-175	3V	I	7	TRKT1-R
			8	GND
T.P.JIG	A	O	9	EVEN_RF_MONITOR
T.P.JIG	G		10	EVEN_RF_GND
DPR-175	3V	I	11	ODD_SCAREA
DPR-175	3V	I	12	ODD_AVAREA
DPR-175, T.P.JIG	3V	O	13	ODD_SWP
			14	GND
T.P.JIG	A	O	15	ODD_RF_MONITOR
T.P.JIG	G		16	ODD_RF_GND
DPR-175	3V	I	17	EVEN_SCAREA
DPR-175	3V	I	18	EVEN_AVAREA
DPR-175, SSP-24, T.P.JIG	3V	O	19	EVEN_SWP
			20	GND
T.P.JIG	A	O	21	PB_RF_MONITOR
T.P.JIG	G		22	PB_RF_GND
			23	GND
DPR-175	3V	O	24	EVEN_DXI0
DPR-175	3V	O	25	EVEN_DXI1
DPR-175	3V	O	26	EVEN_DXI2
DPR-175	3V	O	27	EVEN_DXI3
DPR-175	3V	O	28	EVEN_DXI4
DPR-175	3V	O	29	EVEN_SYNP
DPR-175	3V	O	30	EVEN_CPCK
			31	GND
			32	GND
DPR-175	3V	O	33	ODD_DXI0
DPR-175	3V	O	34	ODD_DXI1
DPR-175	3V	O	35	ODD_DXI2
DPR-175	3V	O	36	ODD_DXI3
DPR-175	3V	O	37	ODD_DXI4
DPR-175	3V	O	38	ODD_SYNP
DPR-175	3V	O	39	ODD_CPCK
			40	GND
DPR-175	3V	I	41	ME
DPR-175	3V	I	42	BSC_ON
DPR-175	3V	I	43	VIT_OFF
DPR-175	3V	I	44	EVEN_ITISRC
			45	GND

"1"49"48"47"46

RP_120/CN202

CN202

DESTINATION	LEVEL	I/O	No.	NAME
			1	GND
			2	GND
			3	RESERVE2
			4	RESERVE1
SSP-24, VPR-71, DPR-175	5V	I	5	JC_RESET
KY-484	5V	I	6	MIC_VCC
KY-484	5V	I/O	7	MIC_SDA
KY-484	5V	I	8	MIC_SCK
KY-484	G	I	9	MIC_GND
			10	GND
SSP-24	3V	O	11	LOADING_SENSOR2
SSP-24	3V	O	12	LOADING_SENSOR1
SSP-24	5V	I	13	H-MOTOR_OFF
SSP-24, DPR-175, VPR-71, KY-484	5V	I	14	CPU_RESET
			15	GND
			16	GND
DPR-175	3V	I	17	DRCKREF
			18	GND
DPR-175	3V	I	19	FE_STBY
DPR-175	3V	I	20	FE_CLKEN
			21	GND
DPR-175	3V	O	22	EVEN_CRCK
			23	GND
DPR-175	3V	I	24	EVEN_RECA1
DPR-175	3V	I	25	EVEN_RECA2
DPR-175	3V	I	26	EVEN_CLKEN
DPR-175	3V	I	27	EVEN_DXO4
DPR-175	3V	I	28	EVEN_DXO3
DPR-175	3V	I	29	EVEN_DXO2
DPR-175	3V	I	30	EVEN_DXO1
DPR-175	3V	I	31	EVEN_DXO0
			32	GND
			33	GND
DPR-175	3V	O	34	ODD_CRCK
			35	GND
DPR-175	3V	I	36	ODD_RECA1
DPR-175	3V	I	37	ODD_RECA2
DPR-175	3V	I	38	ODD_CLKEN
DPR-175	3V	I	39	ODD_DXO4
DPR-175	3V	I	40	ODD_DXO3
DPR-175	3V	I	41	ODD_DXO2
DPR-175	3V	I	42	ODD_DXO1
DPR-175	3V	I	43	ODD_DXO0
			44	GND
			45	GND

"1"49"48"47"46

CL1
CL2

Mother board
MB-920 (4/5)
BOARD NO. 1-679-114-11
LOT NO. 064-
DSR-1800_MB-920_111_4

15-70

MB-920 (5/5)

SW'ing REG/CN1

CN1

DESTINATION	LEVEL	I/O	No.	NAME
SSP-24	5V	I	1	H-FAN_MOTOR_STOP
			2	REG_+5V
			3	GND (REG)
			4	REG_+6V
			5	GND (REG)
			6	REG_-6V
			7	GND (UNREG)
			8	UNREG_-12V
			9	GND (UNREG)
			10	UNREG_+12V

SW'ing REG/CN2

CN2

DESTINATION	LEVEL	I/O	No.	NAME
			1	GND (REG)
			2	GND (REG)
			3	REG_+3.15V
			4	REG_+3.15V

FOR JIG/CN300

CN300

DESTINATION	LEVEL	I/O	No.	NAME
			1	GND (REG)
			2	REG_+5V
			3	REG_+6V
			4	REG_-6V
			5	REG_+3.15V
			6	GND (REG)
			7	N.C
			8	UNREG_+12V
			9	GND (UNREG)
			10	UNREG_-12V

DR-428/CN301

CN301

DESTINATION	LEVEL	I/O	No.	NAME
			1	GND (UNREG)
			2	GND (UNREG)
			3	UNREG_+12V
			4	UNREG_+12V
			5	GND (REG)
			6	GND (REG)
			7	REG_+3.15V
			8	REG_+5V
			9	REG_+6V
			10	REG_-6V

DR-428/CN302

CN302

DESTINATION	LEVEL	I/O	No.	NAME	
			1	GND (L_D1_MODE)	
			2	N.C	CL3
			3	N.C	CL4
SSP-24	3V	O	4	LOADING_FG	
SSP-24	A	I	5	L/C-MOTOR_DRIVE	
SSP-24	5V	I	6	L/C-MOTOR_CONT1	
SSP-24	5V	I	7	L/C-MOTOR_CONT2	
SSP-24	5V	I	8	L-SOL.POWER_OFF	
SSP-24	3V	I	9	SV-DR_SCK	
SSP-24	3V	I	10	SV-DR_SO	
SSP-24	3V	O	11	SV-DR_SI	
SSP-24	3V	I	12	DR_SCOM_CS	
			13	GND	
SSP-24	3V	I	14	SV_EEPROM_CS	
			15	GND	
SSP-24	3V	O	16	DR_SCOM_BUSY	
SSP-24	3V	O	17	SV_EEPROM_BUSY	
SSP-24	5V	O	18	CAPSTAN_FG_A	
SSP-24	5V	O	19	CAPSTAN_FG_B	
SSP-24	5V	I	20	L-CAPSTAN_POWER_OFF	
			21	GND	
SSP-24	A	I	22	CAPSTAN_DRIVE	
SSP-24	5V	I	23	CAPSTAN_DIR_CMD	
			24	GND	
SSP-24	5V	O	25	T-REEL_FG_A	
SSP-24	5V	O	26	T-REEL_FG_B	
SSP-24	5V	I	27	L-T-REEL_POWER_OFF	
SSP-24	A	I	28	T-REEL_DRIVE	
SSP-24	5V	I	29	T-REEL_DIR_CMD	
SSP-24	5V	I	30	L/C-MOTOR_CONT3	
SSP-24	5V	I	31	L-DRUM_POWER_OFF	
SSP-24	A	O	32	CAPSTAN_CURRENT	
SSP-24	5V	O	33	S-REEL_FG_A	
SSP-24	5V	O	34	S-REEL_FG_B	
SSP-24	5V	I	35	L-S-REEL_POWER_OFF	
SSP-24	A	I	36	S-REEL_DRIVE	
SSP-24	5V	I	37	S-REEL_DIR_CMD	
			38	N.C	CL5
SSP-24	3V	I	39	SV_1/2_VD	CL6
SSP-24	5V	I	40	REF_+5V	
SSP-24	A	O	41	S-TENSION	
			42	GND (REF)	
			43	GND	
			44	GND	
			45	GND	

FOR T.P.JIG/CN303

CN303

DESTINATION	LEVEL	I/O	No.	NAME
			1	GND
RP-120	A	I	2	EVEN_RF_MONITOR
			3	GND
RP-120	G		4	EVEN_RF_GND
			5	GND
RP-120. DPR-175	3V	I	6	ODD_SWP
			7	GND
RP-120	A	I	8	ODD_RF_MONITOR
			9	GND
RP-120	G		10	ODD_RF_GND
			11	GND
RP-120. DPR-175. SSP-24	3V	I	12	EVEN_SWP
			13	GND
RP-120	A	I	14	PB_RF_MONITOR
			15	GND
RP-120	G		16	PB_RF_GND
			17	REG_+6V
			18	REG_+6V
			19	GND
			20	N.C
			21	GND
			22	N.C
			23	UNREG_-12V
			24	UNREG_-12V
			25	N.C
			26	N.C
			27	UNREG_+12V
			28	UNREG_+12V
			29	N.C
			30	GND

Mother board
MB-920 (5/5)
BOARD NO. 1-679-114-11
LOT NO. 064-
DSR-1800_MB-920_111_5

MB-927 (1/4)

SW'ing REG /CN1

CN1

No.	NAME	I/O	LEVEL	DESTINATION
1	H-FAN_MOTOR_STOP	I	5V	SSP-23
2	REG_+5V			
3	GND (REG)			
4	REG_+6V			
5	GND (REG)			
6	REG_-6V			
7	GND (UNREG)			
8	UNREG_-12V			
9	GND (UNREG)			
10	UNREG_+12V			

SW'ing REG /CN2

CN2

No.	NAME	I/O	LEVEL	DESTINATION
1	GND (REG)			
2	GND (REG)			
3	REG_+3.15V			
4	REG_+3.15V			

SSP-23/CN101

CN101

No.	NAME	I/O	LEVEL	DESTINATION
1	GND			
2	PB_CPCK	I	3V	PRE-45
3	PB_SCSRC	O	3V	PRE-45
4	PB_AVSRC	O	3V	PRE-45
5	GND			
6	PB_ITISRC	O	3V	PRE-45
7	PB_SCSYNP	I	3V	PRE-45
8	PB_AVSYNP	I	3V	PRE-45
9	GND			
10	PB_ITISYNP	I	3V	PRE-45
11	PB_AVD4	I	3V	PRE-45
12	PB_AVD3	I	3V	PRE-45
13	GND			
14	PB_AVD2	I	3V	PRE-45
15	PB_AVD1	I	3V	PRE-45
16	PB_AVD0	I	3V	PRE-45
17	GND			
18	PB_ISCD4	I	3V	PRE-45
19	PB_ISCD3	I	3V	PRE-45
20	PB_ISCD2	I	3V	PRE-45
21	GND			
22	PB_ISCD1	I	3V	PRE-45
23	PB_ISCD0	I	3V	PRE-45
24	GND			
25	GND			
26	N.C			
27	GND			
28	GND			
29	GND			
30	GND			
31	GND			
32	GND			
33	GND			
34	GND			
35	GND			
36	GND			
37	GND			
38	GND			
39	GND			
40	GND			
41	GND			
42	GND			
43	GND			
44	GND			
45	GND			
46	GND			
47	PLLSRC	O	3V	PRE-45
48	N.C			
49	GND			
50	N.C			
51	N.C			
52	N.C			
53	GND			
54	N.C			
55	N.C			
56	PB_SWP	I	3V	PRE-45 T.P.JIG
57	GND			
58	TRKT1_P	O	3V	PRE-45
59	FLTT1_P	O	3V	PRE-45
60	N.C			
61	GND			
62	N.C			
63	N.C			
64	DRCKREF	O	3V	PRE-45
65	REG_+5V			
66	REG_+5V			
67	REG_+5V			
68	REG_+5V			
69	GND (REG)			
70	GND (REG)			
71	GND (REG)			
72	GND (REG)			
73	REG_+3.15V			
74	REG_+3.15V			
75	REG_+3.15V			
76	REG_+3.15V			
77	REG_+6V			
78	REG_+6V			
79	REG_+6V			
80	REG_+6V			
81	REG_-6V			
82	REG_-6V			
83	REG_-6V			
84	REG_-6V			
85	GND (REG)			
86	GND (REG)			
87	GND (REG)			
88	GND (REG)			
89	UNREG_+12V			
90	UNREG_+12V			
91	UNREG_+12V			
92	UNREG_+12V			
93	UNREG_-12V			
94	UNREG_-12V			
95	UNREG_-12V			
96	UNREG_-12V			
97	GND (UNREG)			
98	GND (UNREG)			
99	GND (UNREG)			
100	GND (UNREG)			

SSP-23/CN102

CN102

DESTINATION	LEVEL	I/O	No.	NAME	No.	NAME	I/O	LEVEL	DESTINATION
			1	GND	2	N.C			
IF-820	3V	I	3	NSG_OFOE	4	NSG_FH	I	3V	IF-820
			5	GND	6	NSG_TOFOE	I	3V	IF-820
IF-820	3V	I	7	NSG_TFH	8	NSG_VD	I	3V	IF-820
			9	GND	10	NSG_HD	I	3V	IF-820
IF-820	3V	I	11	NSG_JOE	12	NSG_CK13D	I	3V	IF-820
			13	GND	14	NSG_CK27D	I	3V	IF-820
			15	GND	16	GND			
			17	GND	18	DAC9	O	3V	IF-820
IF-820	3V	O	19	DAC8	20	DAC7	O	3V	IF-820
			21	GND	22	DAC6	O	3V	IF-820
IF-820	3V	O	23	DAC5	24	DAC4	O	3V	IF-820
			25	GND	26	DAC3	O	3V	IF-820
IF-820	3V	O	27	DAC2	28	DAC1	O	3V	IF-820
			29	GND	30	DAC0	O	3V	IF-820
IF-820	3V	O	31	DA_CK13	32	N.C			
			33	GND	34	DAY9	O	3V	IF-820
IF-820	3V	O	35	DAY8	36	DAY7	O	3V	IF-820
			37	GND	38	DAY6	O	3V	IF-820
IF-820	3V	O	39	DAY5	40	DAY4	O	3V	IF-820
			41	GND	42	DAY3	O	3V	IF-820
IF-820	3V	O	43	DAY2	44	DAY1	O	3V	IF-820
			45	GND	46	DAY0	O	3V	IF-820
IF-820	3V	O	47	LBY	48	N.C			
			49	GND	50	HEAD_ROOM_SEL1	O	3V	
IF-820	3V	O	51	HEAD_ROOM_SEL2	52	XLR_OUT_LEVEL_SEL1	O	3V	IF-820
			53	GND	54	XLR_OUT_LEVEL_SEL2	O	3V	IF-820
IF-820	3V	O	55	SDIP_DT12	56	SDIP_DT34	O	3V	IF-820
			57	GND	58	MONI_DT	O	3V	IF-820
IF-820	3V	O	59	DA_LRCK	60	DA_BCK	O	3V	IF-820
			61	GND	62	DA_256FS	O	3V	IF-820
			63	N.C	64	N.C			
			65	GND	66	N.C			
PRE-45	5V	O	67	H-MOTOR_OFF	68	LOADING_SENSOR1	I	3V	PRE-45
			69	GND	70	LOADING_SENSOR2	I	3V	PRE-45
DR-428	3V	I	71	LOADING_FG	72	L/C-MOTOR_DRIVE	O	A	DR-428
			73	GND	74	L/C-MOTOR_CONT1	O	5V	DR-428
DR-428	5V	O	75	L/C-MOTOR_CONT2	76	L-SOL_POWER_OFF	O	3V	DR-428
			77	GND	78	SV_DR_SCK	O	3V	DR-428
DR-428	3V	O	79	SV_DR_SO	80	SV_DR_SI	I	3V	DR-428
			81	GND	82	DR_SCOM_CS	O	3V	DR-428
DR-428	3V	O	83	SV_EEPROM_CS	84	DR_SCOM_BUSY	I	3V	DR-428
			85	GND	86	SV_EEPROM_BUSY	I	3V	DR-428
DR-428	5V	I	87	CAPSTAN_FG_A	88	CAPSTAN_FG_B	I	5V	DR-428
			89	GND	90	L-CAPSTAN_POWER_OFF	O	5V	DR-428
DR-428	A	O	91	CAPSTAN_DRIVE	92	CAPSTAN_DIR_CMD	O	5V	DR-428
			93	GND	94	T-REEL_FG_A	I	5V	DR-428
DR-428	5V	I	95	T-REEL_FG_B	96	L-T-REEL_POWER_OFF	O	5V	DR-428
			97	GND	98	T-REEL_DRIVE	O	A	DR-428
DR-428	5V	O	99	T-REEL_DIR_CMD	100	L/C-MOTOR_CONT3	O	5V	DR-428
			101	GND	102	L-DRUM_POWER_OFF	O	5V	DR-428
DR-428	A	I	103	CAPSTAN_CURRENT	104	S-REEL_FG_A	I	5V	DR-428
			105	GND	106	S-REEL_FG_B	I	5V	DR-428
DR-428	5V	O	107	L-S-REEL_POWER_OFF	108	S-REEL_DRIVE	O	A	DR-428
			109	GND	110	S-REEL_DIR_CMD	O	5V	DR-428
DR-428	3V	O	111	5V_1/2_VD	112	REF_+5V	O	5V	DR-428
			113	GND	114	S-TENSION	I	A	DR-428
			115	N.C	116	H-FAN_MOTOR_STOP	O	5V	DR-428
			117	GND	118	N.C			
			119	N.C	120	N.C			
			121	GND	122	NCG_CS	O	5V	IF-820
IF-820	5V	I	123	NSG_OE	124	NSG_CS	O	5V	IF-820
			125	GND	126	SY_SI	I	5V	IF-820, KY-484
IF-820, KY-484	5V	O	127	SY_SO	128	SY_SCK	O	5V	IF-820, KY-484
			129	GND	130	CPU_RESET	O	5V	IF-820, KY-484, PRE-45
IF-820, PRE-45	5V	O	131	JC_RESET	132	VPR_AD_CS	O	5V	IF-820
			133	GND	134	KY_CS	O	5V	KY-484
			135	N.C	136	OUTPUT_LTC (X)	I	A	IF-820
			137	GND	138	OUTPUT_LTC (G)		G	IF-820
			139	N.C	140	N.C			
			141	GND	142	RM_RX (-)	I/O	A	IF-820
IF-820	A	I/O	143	RM_RX (+)	144	RM_TX (-)	I/O	A	IF-820
			145	GND	146	RM_TX (+)	I/O	A	IF-820
			147	GND	148	AUDIO_OUT_MUTE	O	5V	IF-820, HP-108

Mother board

MB-927 (1/4)

BOARD NO. 1-679-104-11

LOT NO. 064-

DSR-1600_MB-927_111_1

15-72

MB-927 (2/4)

IF-820/CN103

CN103

DESTINATION	LEVEL	I/O	No.	NAME
			1	GND
SSP-23	5V	I	2	NCG_CS
SSP-23	5V	O	3	NSG_OE
SSP-23	5V	I	4	NSG_CS
			5	GND
SSP-23, KY-484	5V	O	6	SY_SI
SSP-23, KY-484	5V	I	7	SY_SO
SSP-23, KY-484	5V	I	8	SY_SCK
			9	GND
SSP-23, KY-484, PRE-45	5V	I	10	CPU_RESET
			11	GND
SSP-23, PRE-45	5V	I	12	JC_RESET
			13	GND
SSP-23	3V	O	14	NSG_OFOE
			15	GND
SSP-23	3V	O	16	NSG_FH
			17	GND
SSP-23	3V	O	18	NSG_TOFOE
SSP-23	3V	O	19	NSG_TFH
SSP-23	3V	O	20	NSG_VD
			21	GND
SSP-23	3V	O	22	NSG_HD
SSP-23	3V	O	23	NSG_JOE
			24	N.C
			25	GND
SSP-23	3V	O	26	NSG_CK13D
			27	GND
SSP-23	3V	O	28	NSG_CK27D
			29	GND
			30	N.C
			31	GND
SSP-23	3V	I	32	DAC9
			33	GND
SSP-23	3V	I	34	DAC8
SSP-23	3V	I	35	DAC7
SSP-23	3V	I	36	DAC6
			37	GND
SSP-23	3V	I	38	DAC5
SSP-23	3V	I	39	DAC4
SSP-23	3V	I	40	DAC3
			41	GND
SSP-23	3V	I	42	DAC2
SSP-23	3V	I	43	DAC1
SSP-23	3V	I	44	DAC0
			45	GND
SSP-23	3V	I	46	DA_CK13
			47	GND
SSP-23	3V	I	48	DAY9
			49	GND
SSP-23	3V	I	50	DAY8
SSP-23	3V	I	51	DAY7
SSP-23	3V	I	52	DAY6
			53	GND
SSP-23	3V	I	54	DAY5
SSP-23	3V	I	55	DAY4
SSP-23	3V	I	56	DAY3
			57	GND
SSP-23	3V	I	58	DAY2
SSP-23	3V	I	59	DAY1
SSP-23	3V	I	60	DAY0
			61	GND
SSP-23	3V	I	62	LBY
			63	N.C
			64	N.C
			65	REG_+5V
			66	REG_+5V
			67	REG_+5V
			68	REG_+5V
			69	GND (REG)
			70	GND (REG)
			71	GND (REG)
			72	GND (REG)
			73	REG_+3.15V
			74	REG_+3.15V
			75	REG_+3.15V
			76	REG_+3.15V
			77	REG_+6V
			78	REG_+6V
			79	REG_+6V
			80	REG_+6V
			81	REG_-6V
			82	REG_-6V
			83	REG_-6V
			84	REG_-6V
			85	GND (REG)
			86	GND (REG)
			87	GND (REG)
			88	GND (REG)
			89	UNREG_+12V
			90	UNREG_+12V
			91	UNREG_+12V
			92	UNREG_+12V
			93	UNREG_-12V
			94	UNREG_-12V
			95	UNREG_-12V
			96	UNREG_-12V
			97	GND (UNREG)
			98	GND (UNREG)
			99	GND (UNREG)
			100	GND (UNREG)

CL1

CL2

IF-820/CN104

CN104

DESTINATION	LEVEL	I/O	No.	NAME
			1	GND
SSP-23	A	I	2	OUTPUT_LTC (X)
SSP-23	G		3	OUTPUT_LTC (G)
			4	GND
			5	GND
			6	N.C
			7	GND
SSP-23	3V	I	8	HEAD_ROOM_SEL1
			9	GND
SSP-23	3V	I	10	HEAD_ROOM_SEL2
			11	GND
SSP-23	3V	I	12	XLR_OUT_LEVEL_SEL1
			13	GND
SSP-23	3V	I	14	XLR_OUT_LEVEL_SEL2
			15	GND
			16	GND
			17	GND
			18	GND
			19	GND
SSP-23	3V	I	20	SDIP_DT12
			21	GND
SSP-23	3V	I	22	SDIP_DT34
			23	GND
SSP-23	3V	I	24	MONI_DT
			25	GND
SSP-23	3V	I	26	DA_LRCK
			27	GND
SSP-23	3V	I	28	DA_BCK
			29	GND
SSP-23	3V	I	30	DA_256FS
			31	GND
			32	GND
			33	GND
			34	GND
			35	GND
HP-108	A	O	36	HP_L_OUT (X)
			37	GND
HP-108	G		38	HP_L_OUT (G)
			39	GND
HP-108	A	O	40	HP_R_OUT (X)
			41	GND
HP-108	G		42	HP_R_OUT (G)
			43	GND
SSP-23, HP-108	5V	I	44	AUDIO_OUT_MUTE
			45	GND
			46	GND
			47	GND
			48	N.C
			49	GND
KY-484	0-5V	I	50	LOC_SC_PHASE
KY-484	0-5V	I	51	LOC_SYNC_PHASE
KY-484	5V	O	52	VR_VCC
KY-484	G	O	53	VR_GND
			54	N.C
			55	GND
			56	GND
			57	GND
			58	N.C
			59	GND
			60	N.C
			61	GND
			62	GND
			63	GND
			64	GND
			65	GND
			66	GND
			67	GND
			68	GND
			69	GND
			70	GND
			71	GND
			72	GND
			73	GND
			74	GND
			75	GND
			76	GND
			77	GND
			78	GND
			79	GND
SSP-23	5V	I	80	VPR_AD_CS
			81	GND
			82	GND
			83	GND
			84	GND
			85	GND
			86	GND
			87	GND
			88	GND
			89	GND
			90	GND
			91	GND
SSP-23	A	I/O	92	RM_RX (-)
			93	GND
SSP-23	A	I/O	94	RM_RX (+)
			95	GND
SSP-23	A	I/O	96	RM_TX (-)
			97	GND
SSP-23	A	I/O	98	RM_TX (+)
			99	GND
			100	N.C (PRIORITY)

CL3

Mother board

MB-927 (2/4)

BOARD NO. 1-679-104-11

LOT NO. 064-

DSR-1600_MB-927_111_2

MB-927 (3/4)

KY-484/CN108

CN108

DESTINATION	LEVEL	I/O	NO.	NAME
			1	GND (UNREG)
			2	GND (UNREG)
			3	GND (UNREG)
			4	GND (UNREG)
			5	UNREG_+12V
			6	UNREG_+12V
			7	UNREG_+12V
			8	UNREG_+12V
			9	GND (REG)
			10	GND (REG)
			11	GND (REG)
			12	GND (REG)
			13	N.C
			14	N.C
			15	REG_+5V
			16	REG_+5V
IF-820	0-5V	O	17	LOC_SC_PHASE
IF-820	0-5V	O	18	LOC_SYNC_PHASE
IF-820	5V	I	19	VR_VCC
IF-820	G	I	20	VR_GND
PRE-45	G	O	21	MIC_GND
PRE-45	5V	O	22	MIC_SCK
PRE-45	5V	I/O	23	MIC_SDA
PRE-45	5V	O	24	MIC_VCC
SSP-23, IF-820	5V	I	25	SY_SCK
SSP-23, IF-820	5V	O	26	SY_SI
SSP-23, IF-820	5V	I	27	SY_SO
SSP-23	5V	I	28	KY_CS
SSP-23, IF-820, PRE-45	5V	I	29	CPU_RESET
HP-108	5V	I	30	SIRCS_DATA

HP-108/CN109

CN109

DESTINATION	LEVEL	I/O	NO.	NAME
KY-484	5V	O	1	SIRCS_DATA
			2	REG_-6V
			3	REG_+6V
			4	REG_+5V
			5	GND (REG)
			6	GND (REG)
			7	GND (REG)
IF-820	A	I	8	HP_L_OUT (X)
IF-820	G		9	HP_L_OUT (G)
IF-820	A	I	10	HP_R_OUT (X)
IF-820	G		11	HP_R_OUT (G)
SSP-23, IF-820	5V	I	12	AUDIO_OUT_MUTE

PRE-45/CN200

CN200

DESTINATION	LEVEL	I/O	NO.	NAME
			1	GND
			2	GND
			3	N.C
SSP-23	3V	I	4	PLLSRC
			5	N.C
			6	N.C
			7	N.C
			8	GND
SSP-23	3V	O	9	PB_ISCD0
SSP-23	3V	O	10	PB_ISCD1
SSP-23	3V	O	11	PB_ISCD2
SSP-23	3V	O	12	PB_ISCD3
SSP-23	3V	O	13	PB_ISCD4
SSP-23	3V	O	14	PB_AVD0
SSP-23	3V	O	15	PB_AVD1
SSP-23	3V	O	16	PB_AVD2
SSP-23	3V	O	17	PB_AVD3
SSP-23	3V	O	18	PB_AVD4
			19	GND
SSP-23	3V	O	20	PB_ITISYNP
SSP-23	3V	O	21	PB_AVSYNP
SSP-23	3V	O	22	PB_SCSYNP
SSP-23	3V	I	23	PB_ITISRC
SSP-23	3V	I	24	PB_AVSRC
SSP-23	3V	I	25	PB_SCSRC
SSP-23	3V	O	26	PB_CPCK
			27	GND
			28	REG_+5V
			29	REG_+5V
			30	REG_+5V
			31	REG_+5V
			32	REG_+5V
			33	REG_+5V
			34	REG_+6V
			35	REG_+6V
			36	REG_+6V
			37	REG_+6V
			38	REG_+6V
			39	REG_+6V
			40	GND (REG)
			41	GND (REG)
			42	GND (REG)
			43	GND (REG)
			44	GND (REG)
			45	GND (REG)

CL14 CL15

"1"49"48"47"46

PRE-45/CN201

CN201

DESTINATION	LEVEL	I/O	NO.	NAME
			1	GND
			2	GND
			3	GND
			4	GND
SSP-23, IF-820	5V	I	5	JC_RESET
KY-484	5V	I	6	MIC_VCC
KY-484	5V	I/O	7	MIC_SDA
KY-484	5V	I	8	MIC_SCK
KY-484	G	I	9	MIC_GND
			10	GND
SSP-23	3V	O	11	LOADING_SENSOR2
SSP-23	3V	O	12	LOADING_SENSOR1
SSP-23	5V	I	13	H-MOTOR_OFF
SSP-23, IF-820, KY-484	5V	I	14	CPU_RESET
			15	GND
			16	GND
SSP-23	3V	I	17	DRCKREF
			18	GND
			19	GND
			20	GND
			21	GND
			22	GND
			23	GND
			24	GND
			25	GND
			26	GND
SSP-23	3V	I	27	FLTT1_P
SSP-23	3V	I	28	TRKT1_P
			29	GND
			30	GND
			31	GND
			32	GND
			33	GND
			34	GND
			35	GND
			36	GND
SSP-23, T.P.JIG	3V	O	37	PB_SWP
T.P.JIG	A	O	38	PB_RF_MONITOR
T.P.JIG	G		39	PB_RF_GND
			40	GND
			41	GND
			42	GND
			43	GND
			44	GND
			45	GND

"1"49"48"47"46

Mother board
MB-927 (3/4)
BOARD NO. 1-679-104-11
LOT NO. 064-
DSR-1600_MB-927_111_3

15-74

FOR JIG/CN300

CN300

DESTINATION	LEVEL	I/O	NO.	NAME
			1	GND (REG)
			2	REG_+5V
			3	REG_+6V
			4	REG_-6V
			5	REG_+3.15V
			6	GND (REG)
			7	N.C
			8	UNREG_+12V
			9	GND (UNREG)
			10	UNREG_-12V

DR-428/CN301

CN301

DESTINATION	LEVEL	I/O	NO.	NAME
			1	GND (UNREG)
			2	GND (UNREG)
			3	UNREG_+12V
			4	UNREG_+12V
			5	GND (REG)
			6	GND (REG)
			7	REG_+3.15V
			8	REG_+5V
			9	REG_+6V
			10	REG_-6V

DR-428/CN302

CN302

DESTINATION	LEVEL	I/O	NO.	NAME
SSP-23	3V	I	1	GND (L_D1_MODE)
			2	N.C
			3	N.C
SSP-23	3V	O	4	LOADING_FG
SSP-23	A	I	5	L/C-MOTOR_DRIVE
SSP-23	5V	I	6	L/C-MOTOR_CONT1
SSP-23	5V	I	7	L/C-MOTOR_CONT2
SSP-23	5V	I	8	L-SOL.POWER_OFF
SSP-23	3V	I	9	SV_DR_SCK
SSP-23	3V	I	10	SV_DR_SO
SSP-23	3V	O	11	SV_DR_SI
SSP-23	3V	I	12	DR_SCOM_CS
			13	GND
SSP-23	3V	I	14	SV_EEPROM_CS
			15	GND
SSP-23	3V	O	16	DR_SCOM_BUSY
SSP-23	3V	O	17	SV_EEPROM_BUSY
SSP-23	5V	O	18	CAPSTAN_FG_A
SSP-23	5V	O	19	CAPSTAN_FG_B
SSP-23	5V	I	20	L-CAPSTAN_POWER_OFF
			21	GND
SSP-23	A	I	22	CAPSTAN_DRIVE
SSP-23	5V	I	23	CAPSTAN_DIR_CMD
			24	GND
SSP-23	5V	O	25	T-REEL_FG_A
SSP-23	5V	O	26	T-REEL_FG_B
SSP-23	5V	I	27	L-T-REEL_POWER_OFF
SSP-23	A	I	28	T-REEL_DRIVE
SSP-23	5V	I	29	T-REEL_DIR_CMD
SSP-23	5V	I	30	L/C-MOTOR_CONT3
SSP-23	5V	I	31	L-DRUM_POWER_OFF
SSP-23	A	O	32	CAPSTAN_CURRENT
SSP-23	5V	O	33	S-REEL_FG_A
SSP-23	5V	O	34	S-REEL_FG_B
SSP-23	5V	I	35	L-S-REEL_POWER_OFF
SSP-23	A	I	36	S-REEL_DRIVE
SSP-23	5V	I	37	S-REEL_DIR_CMD
			38	N.C
SSP-23	3V	I	39	SV_1/2_VD
SSP-23	5V	I	40	REF_+5V
SSP-23	A	O	41	S-TENSION
			42	GND (REF)
			43	GND
			44	GND
			45	GND

CL11 CL12 CL13 CL16

49 48 47 46

FOR T.P.JIG/CN303

CN303

DESTINATION	LEVEL	I/O	NO.	NAME
			1	GND
			2	N.C
			3	GND
			4	N.C
			5	GND
			6	N.C
			7	GND
			8	N.C
			9	GND
			10	N.C
			11	GND
PRE-45, SSP-23	3V	I	12	PB_SWP
			13	GND
PRE-45	A	I	14	PB_RF_MONITOR
			15	GND
PRE-45	G		16	PB_RF_GND
			17	REG_+6V
			18	REG_+6V
			19	GND
			20	N.C
			21	GND
			22	N.C
			23	UNREG_-12V
			24	UNREG_-12V
			25	N.C
			26	N.C
			27	UNREG_+12V
			28	UNREG_+12V
			29	N.C
			30	GND

32 31

Mother board
MB-927 (4/4)
BOARD NO. 1-679-104-11
LOT NO. 064-
DSR-1600_MB-927_111_4

A B C D E F G H

PRE-45 (1/8)

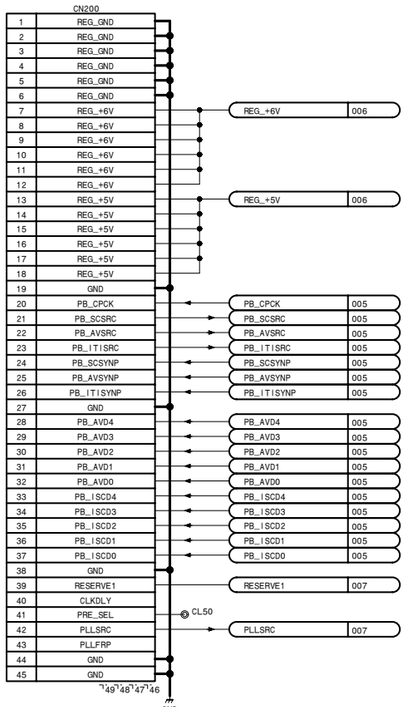

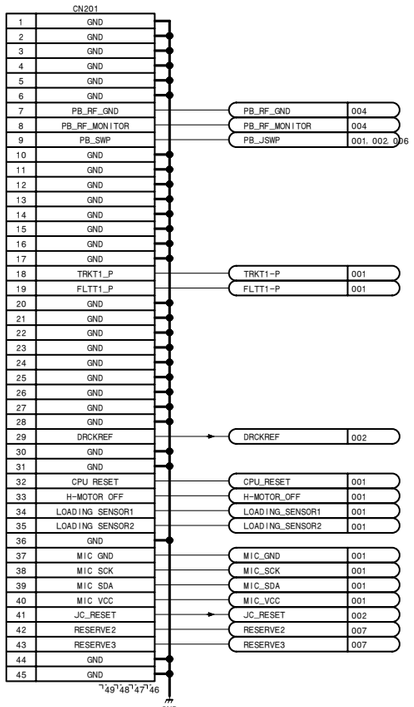

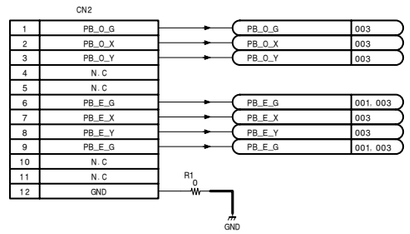

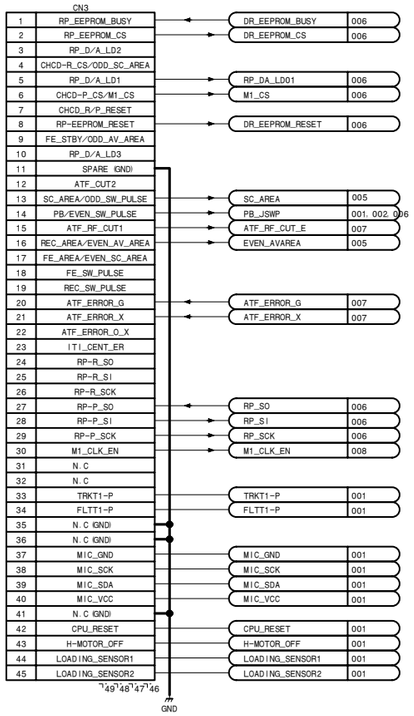

RF PB, ATF detection

PRE-45 (1/8)

BOARD NO. 1-679-105-12, 13
LOT NO. 064
DSR-1600_PRE-45_012_1

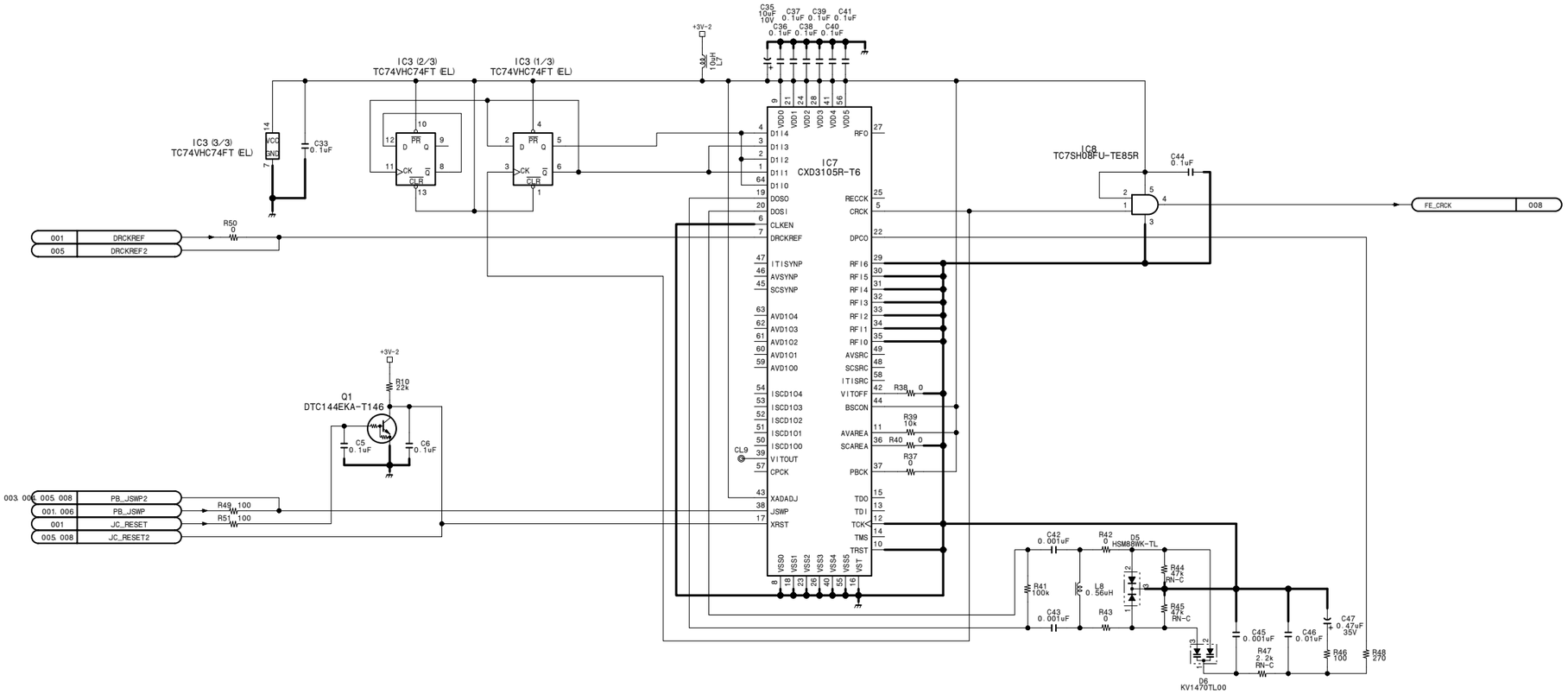

RF PB, ATF detection

PRE-45 (2/8)

BOARD NO. 1-679-105-12, 13
LOT NO. 064
DSR-1600_PRE-45_012_2

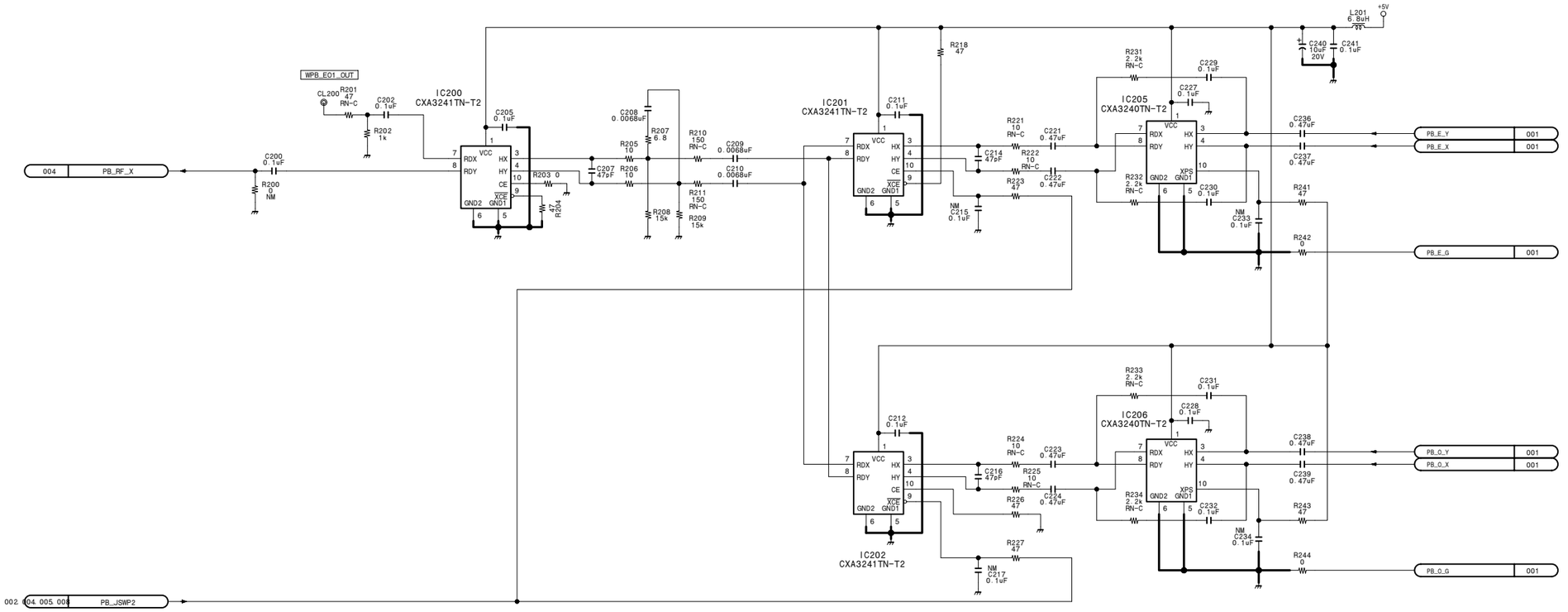

RF PB, ATF detection

PRE-45 (3/8)

BOARD NO. 1-679-105-12, 13
LOT NO. 064
DSR-1600_PRE-45_012_3

http://getMANUAL.com

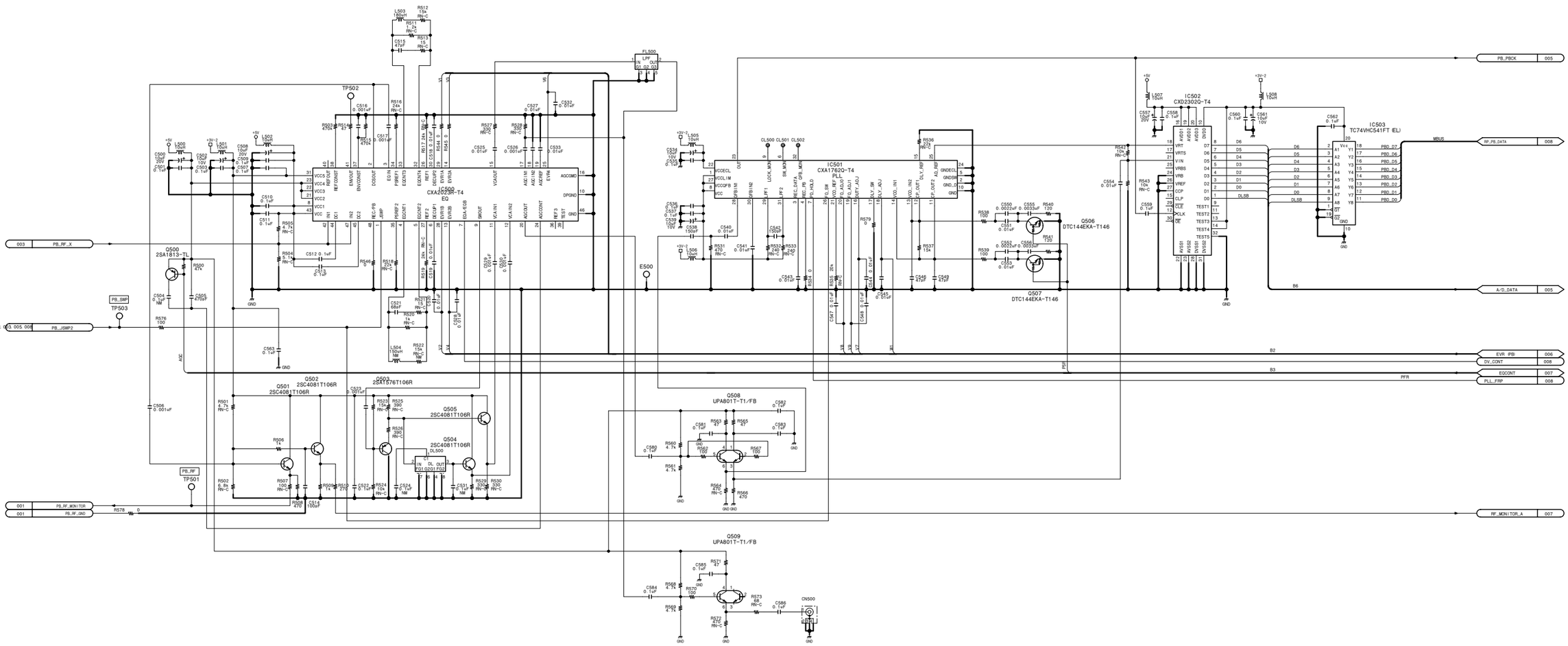

RF PB, ATF detection

PRE-45 (4/8)

BOARD NO. 1-679-105-12, 13
LOT NO. 064
DSR-1600_PRE-45_012_4

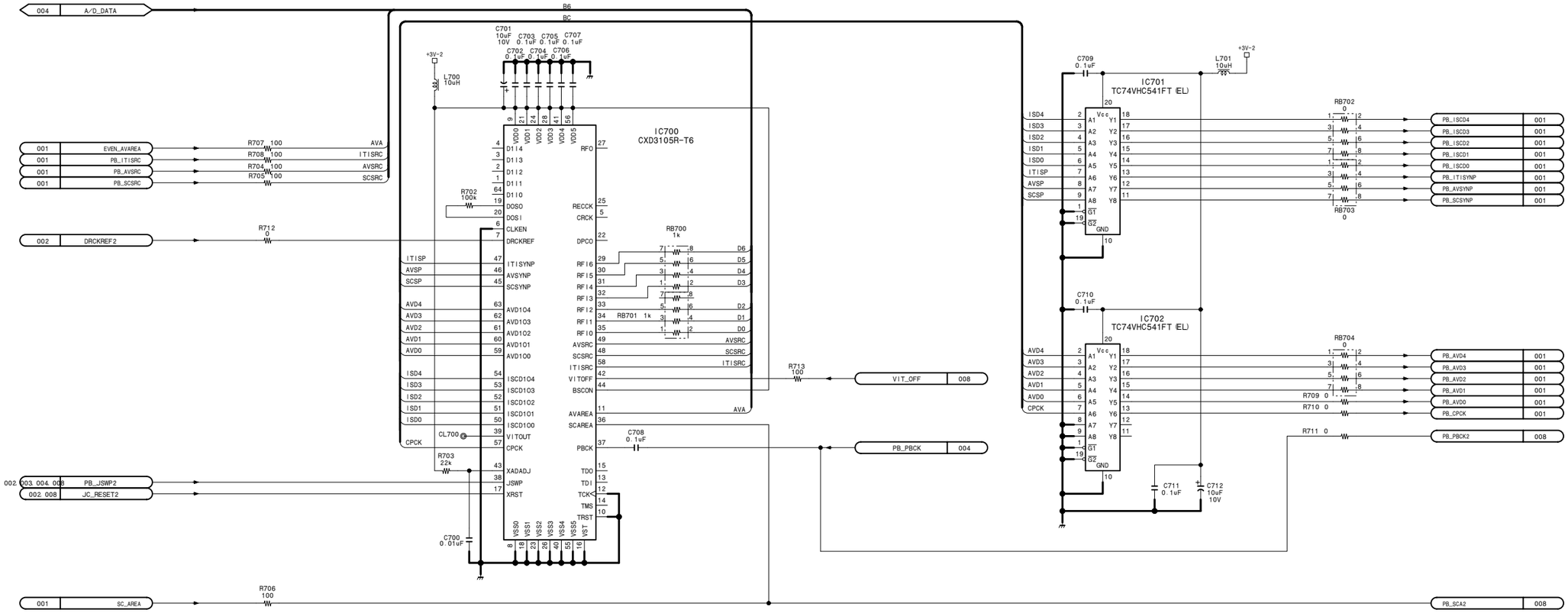

RF PB, ATF detection

PRE-45 (5/8)

BOARD NO. 1-679-105-12, 13
LOT NO. 064
DSR-1600_PRE-45_012_5

PRE-45 (6/8)

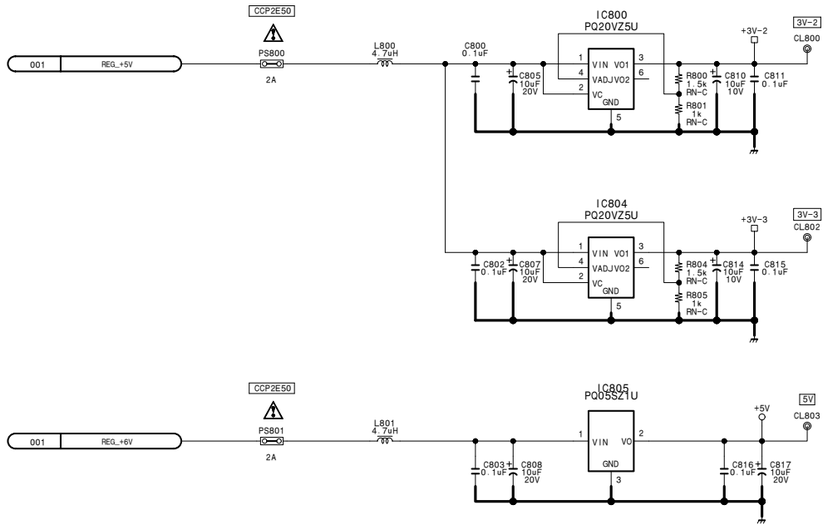

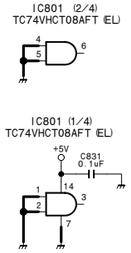

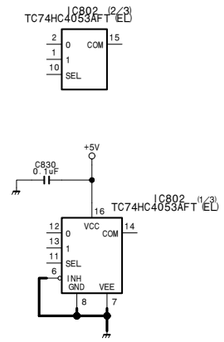

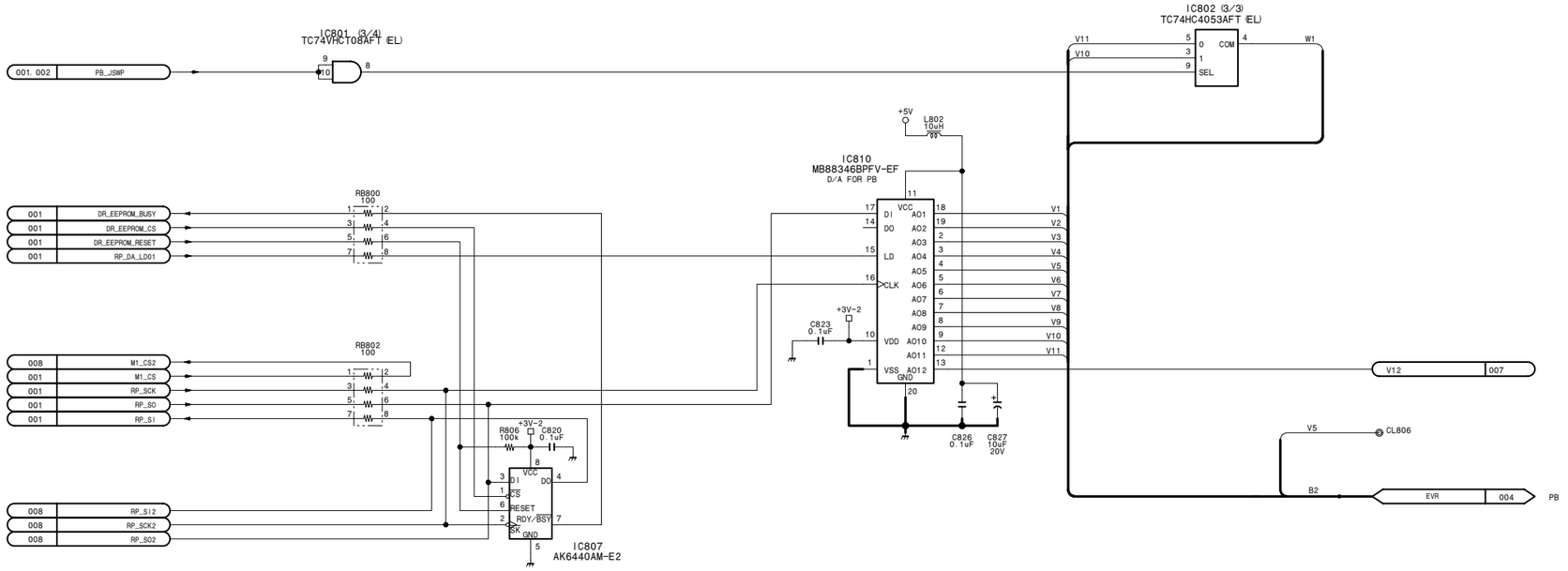

RF PB, ATF detection

PRE-45 (6/8)

BOARD NO. 1-679-105-12, 13
LOT NO. 064
DSR-1600_PRE-45_012_6

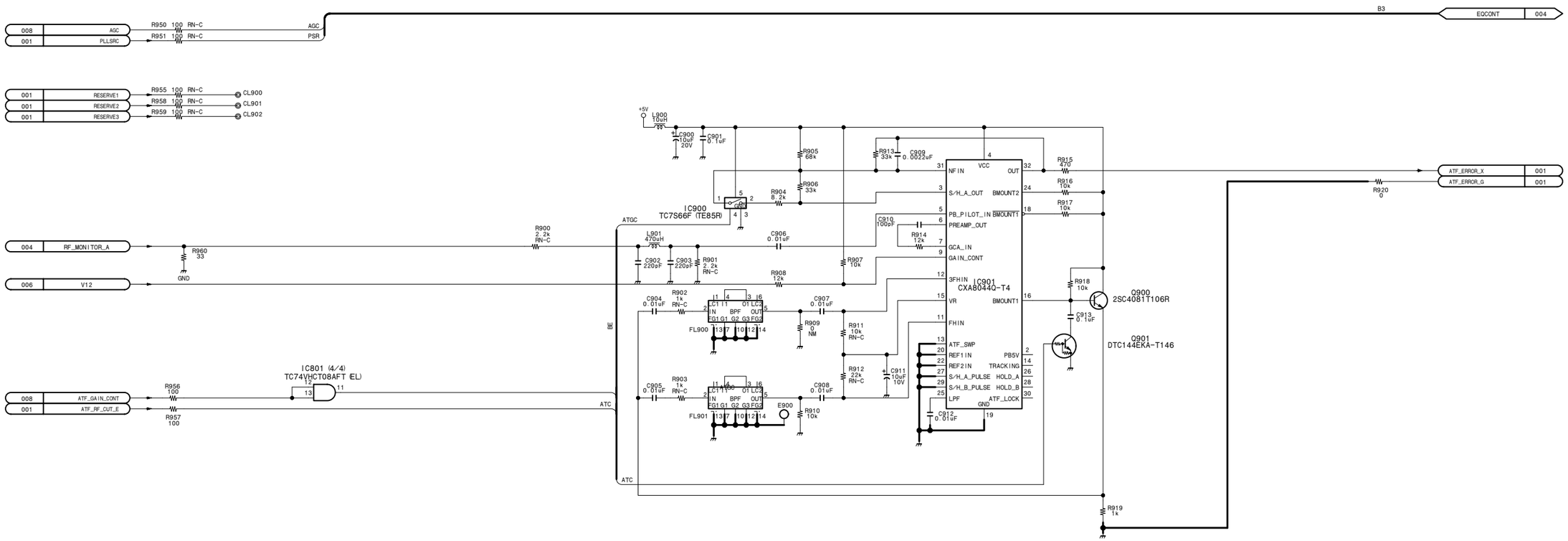

RF PB, ATF detection

PRE-45 (7/8)

BOARD NO. 1-679-105-12, 13
LOT NO. 064
DSR-1600_PRE-45_012_7

PRE-45 (8/8)

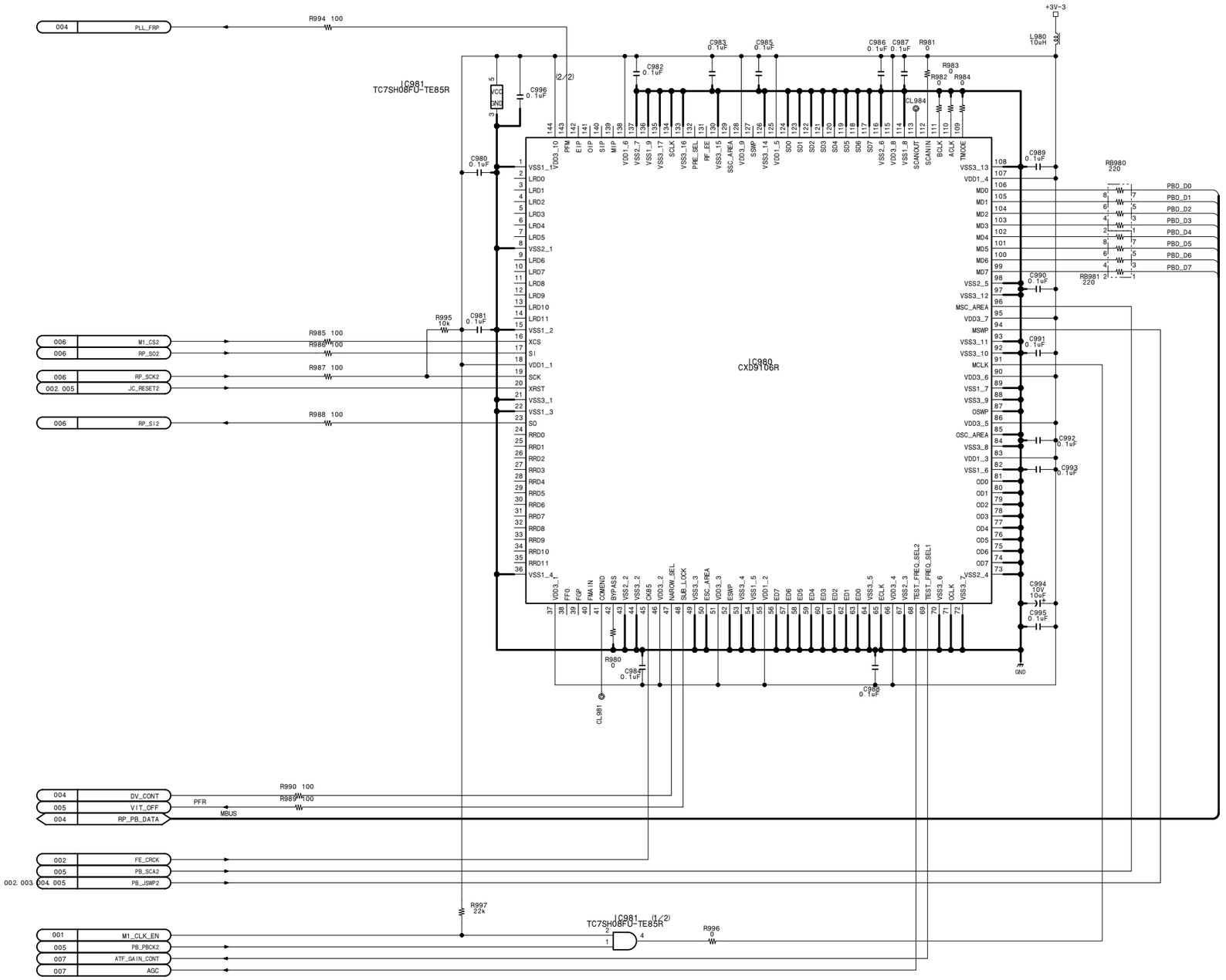

RF PB, ATF detection

PRE-45 (8/8)

BOARD NO. 1-679-105-12, 13
LOT NO. 064
DSR-1600_PRE-45_012_8

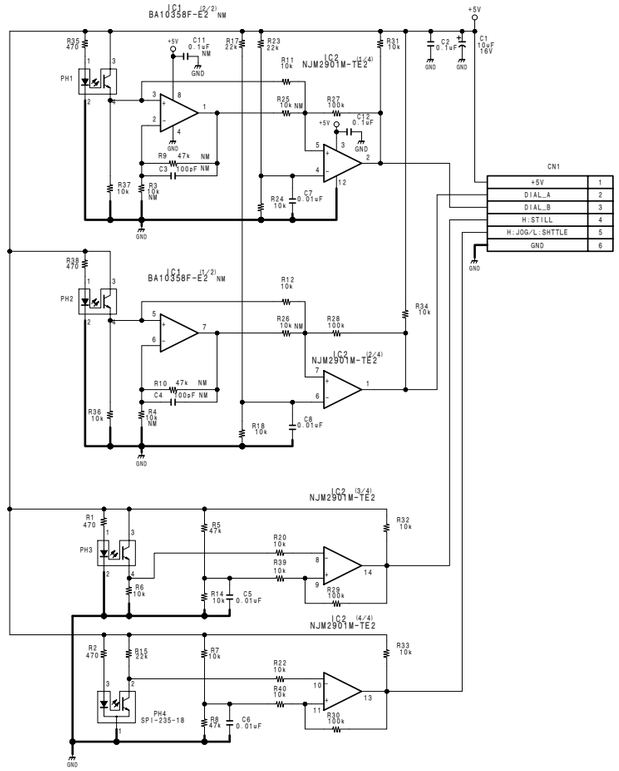

Search dial sensor

PTC-100

BOARD NO. 1-675-520-13
LOT NO. 064-
DSR-2000_PTC-100_C12_1

RP-120 (1/12)

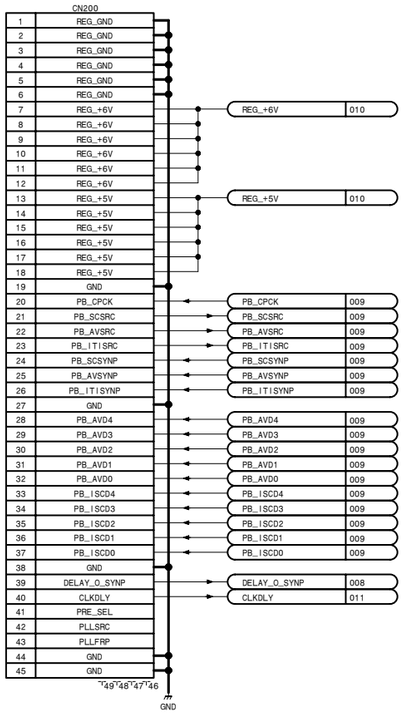

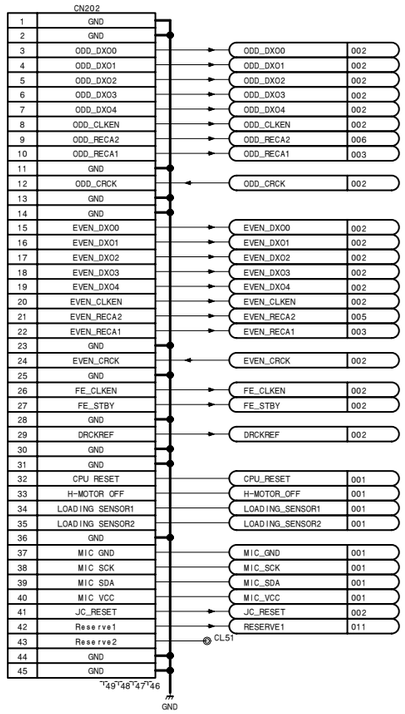

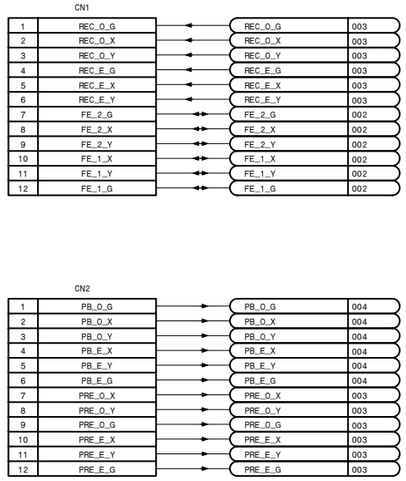

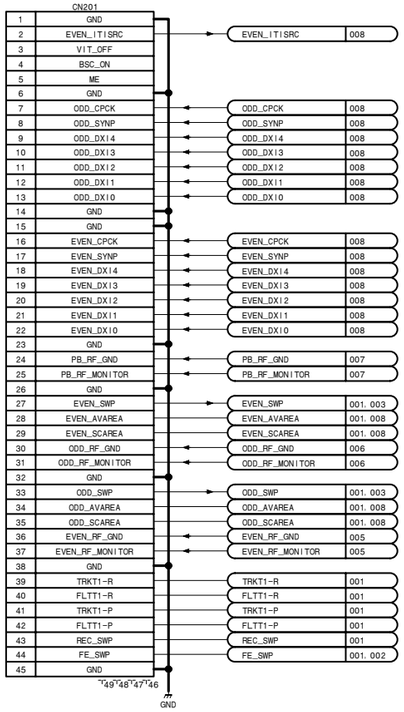

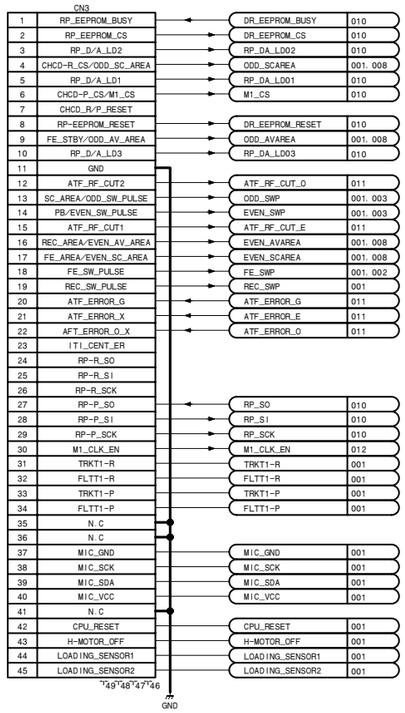

RF REC/PB, ATF detection

RP-120 (1/12)

BOARD NO. 1-679-115-12, 13
LOT NO. 064-

DSR-1800_RP-120_013_1

RP-120 (2/12)

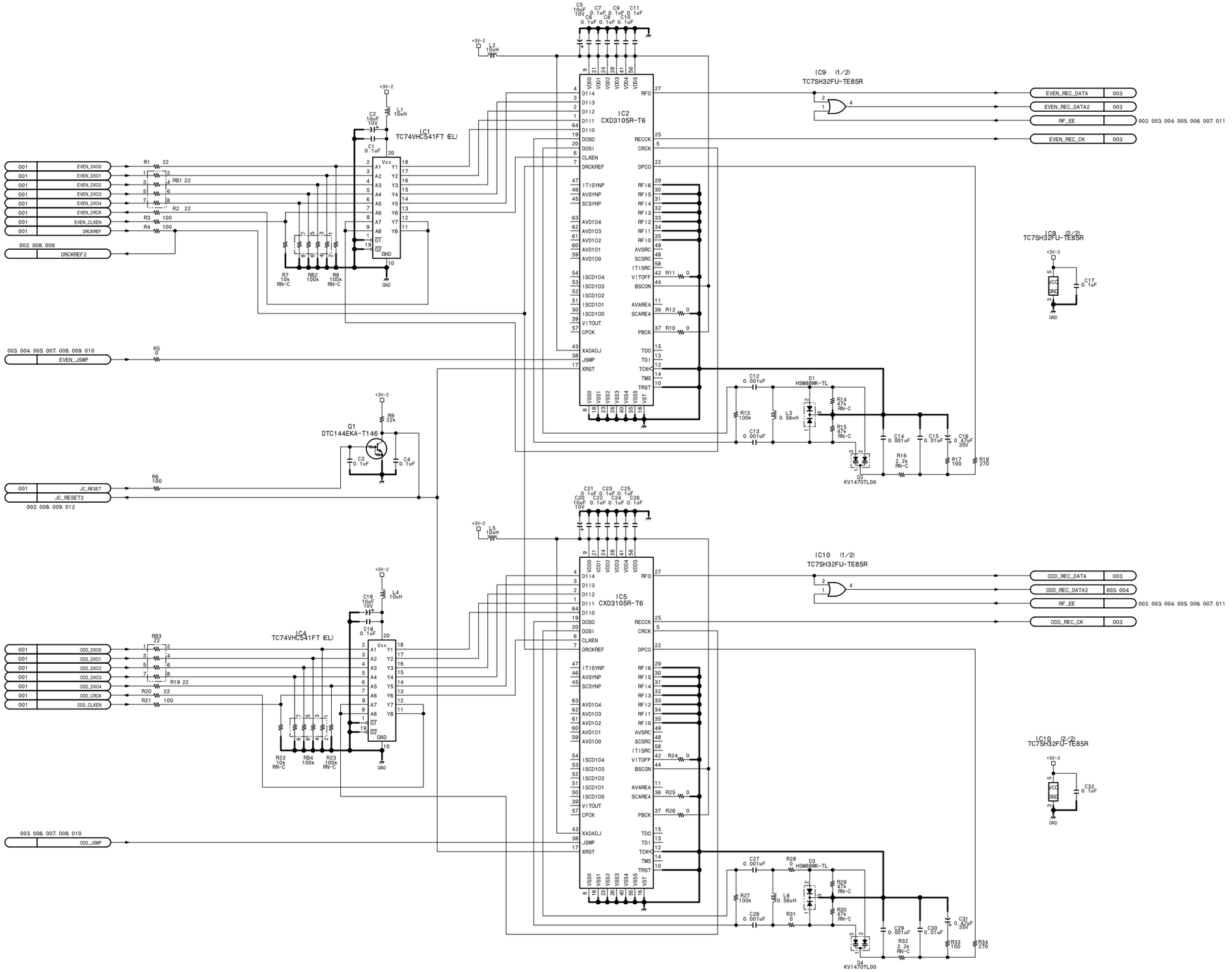

15-86

RP-120 (2/12)

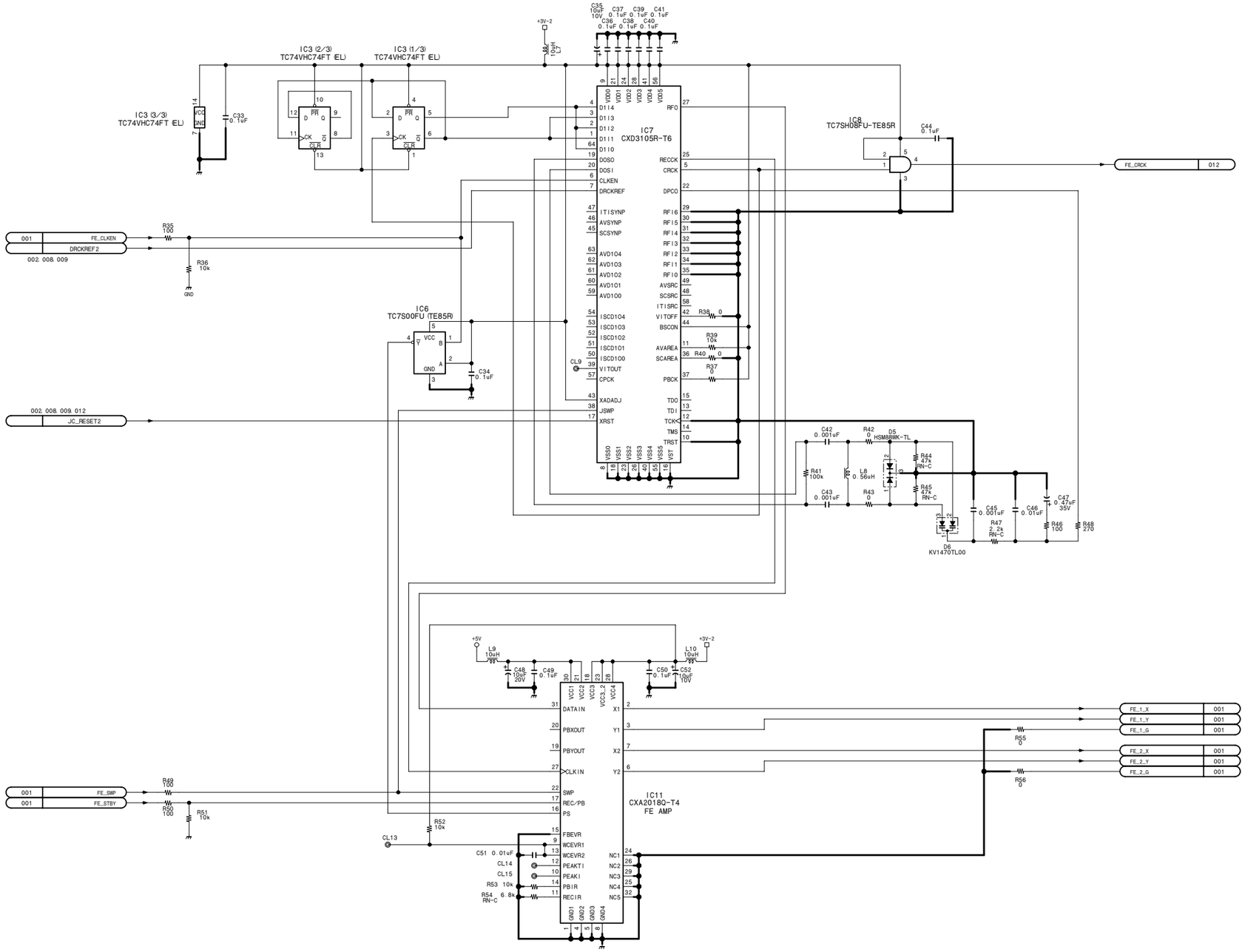

RF REC/PB, ATF detection

RP-120 (2/12)

BOARD NO. 1-679-115-12, 13
LOT NO. 064-
DSR-1800_RP-120_013_2

15-87

RP-120 (3/12)

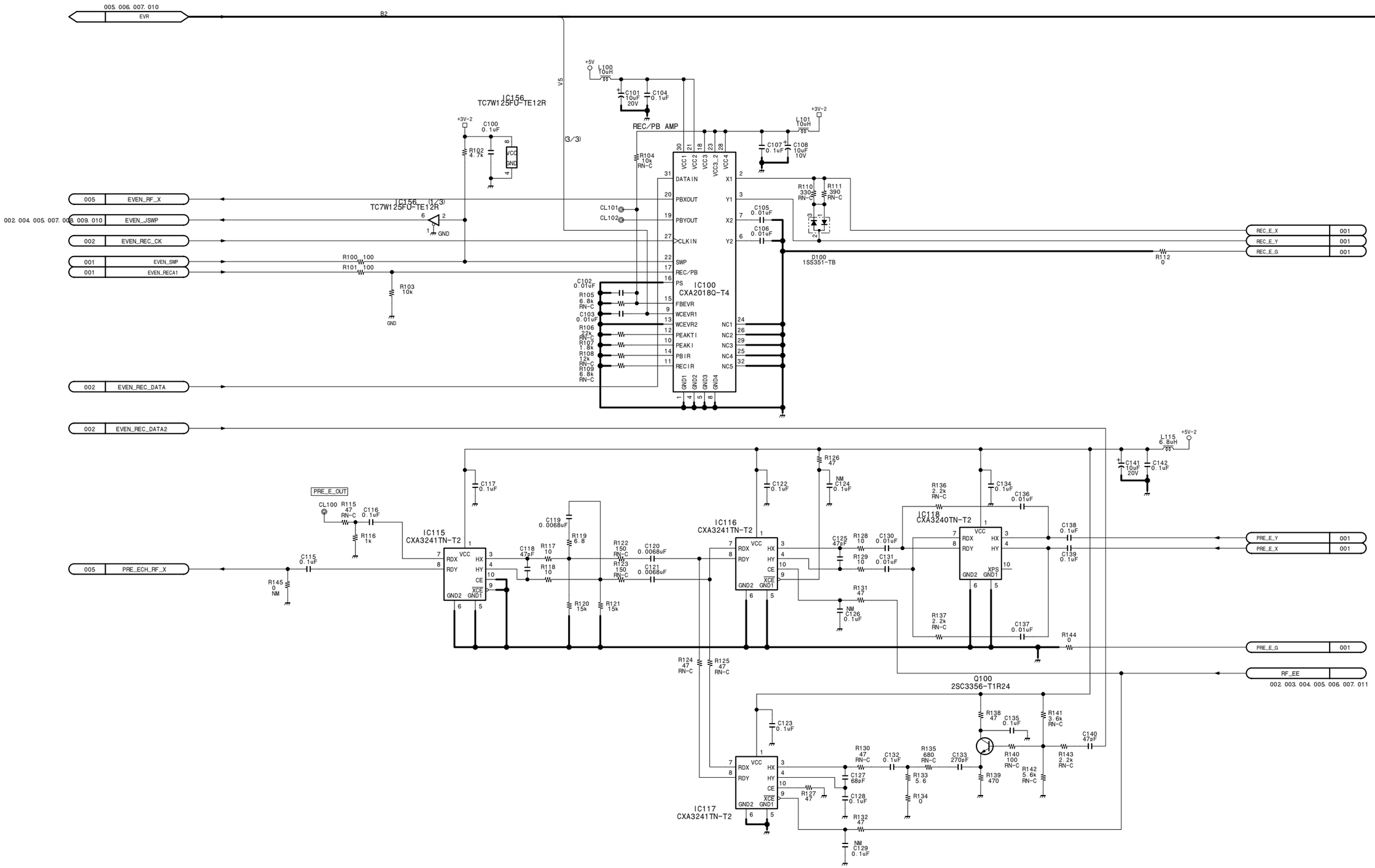
005, 006, 007, 010
EVR
B2
+5V
L100 10uH
C101 10uF 20V
C104 0.1uF
V5
IC156 TC7W125FU-TE12R
+3V-2
C100 0.1uF
R102 4.7k
VCC
GND
(3/3)
REC/PB AMP
L101 10uH
C107 0.1uF
C108 10uF 10V
R104 10k RN-C
005 EVEN_RF_X
002, 004, 005, 007, 008, 009, 010 EVEN_JSWP
002 EVEN_REC_CK
001 EVEN_SWP
001 EVEN_RECA1
002 EVEN_REC_DATA
IC156 (1/3) TC7W125FU-TE12R
GND
R100 100
R101 100
R103 10k
CL101
CL102
C102 0.01uF
C103 0.01uF
R105 6.8k RN-C
R106 22k RN-C
R107 1.8k
R108 12k RN-C
R109 6.8k RN-C
IC100 CXA2018Q-T4
DATAIN
PBXOUT
PBYOUT
CLKIN
SWP
REC/PB
PS
FBEVR
WCEVR1
WCEVR2
PEAKTI
PEAKI
PBIR
RECIR
VCC1
VCC2
VCC3
VCC3_2
VCC4
GND1
GND2
GND3
GND4
X1
Y1
X2
Y2
NC1
NC2
NC3
NC4
NC5
R110 330 RN-C
R111 390 RN-C
C105 0.01uF
C106 0.01uF
D100 1SS351-TB
R112 0
REC_E_X 001
REC_E_Y 001
REC_E_G 001
002 EVEN_REC_DATA2
PRE_E_OUT
CL100
R115 47 RN-C
C116 0.1uF
R116 1k
005 PRE_ECH_RF_X
C115 0.1uF
R145 0 NM
IC115 CXA3241TN-T2
C117 0.1uF
C118 47pF
R117 10
R118 10
C119 0.0068uF
R119 6.8
R120 15k
R121 15k
R122 150 RN-C
R123 150 RN-C
C120 0.0068uF
C121 0.0068uF
IC116 CXA3241TN-T2
C122 0.1uF
R126 47
NM C124 0.1uF
C125 47pF
R128 10
R129 10
C130 0.01uF
C131 0.01uF
R131 47
NM C126 0.1uF
IC118 CXA3240TN-T2
C134 0.1uF
C136 0.01uF
R136 2.2k RN-C
R137 2.2k RN-C
C137 0.01uF
C138 0.1uF
C139 0.1uF
R144 0
PRE_E_Y 001
PRE_E_X 001
PRE_E_G 001
RF_EE
002, 003, 004, 005, 006, 007, 011
L115 6.8uH
C141 10uF 20V
C142 0.1uF
R124 47 RN-C
R125 47 RN-C
Q100 2SC3356-T1R24
C123 0.1uF
IC117 CXA3241TN-T2
R130 47 RN-C
C127 68pF
C128 0.1uF
R127 47
R132 47
NM C129 0.1uF
C132 0.1uF
R135 680 RN-C
R133 5.6
R134 0
C133 270pF
R138 47
C135 0.1uF
R139 470
R140 100 RN-C
R141 3.6k RN-C
R142 5.6k RN-C
R143 2.2k RN-C
C140 47pF

http://getMANUAL.com

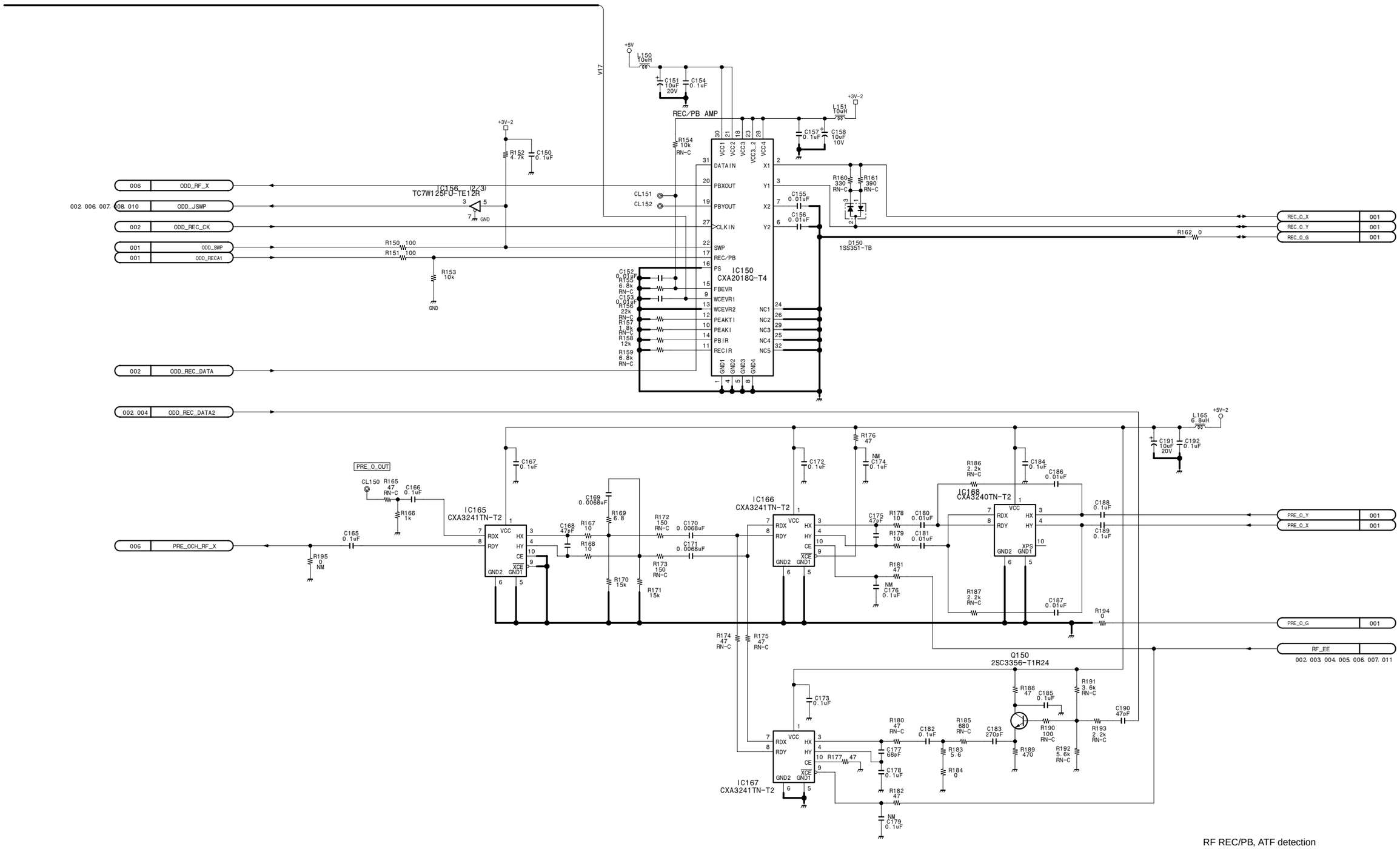

RF REC/PB, ATF detection

RP-120 (3/12)

BOARD NO. 1-679-115-12, 13

LOT NO. 064-

DSR-1800_RP-120_013_3

RP-120 (4/12)

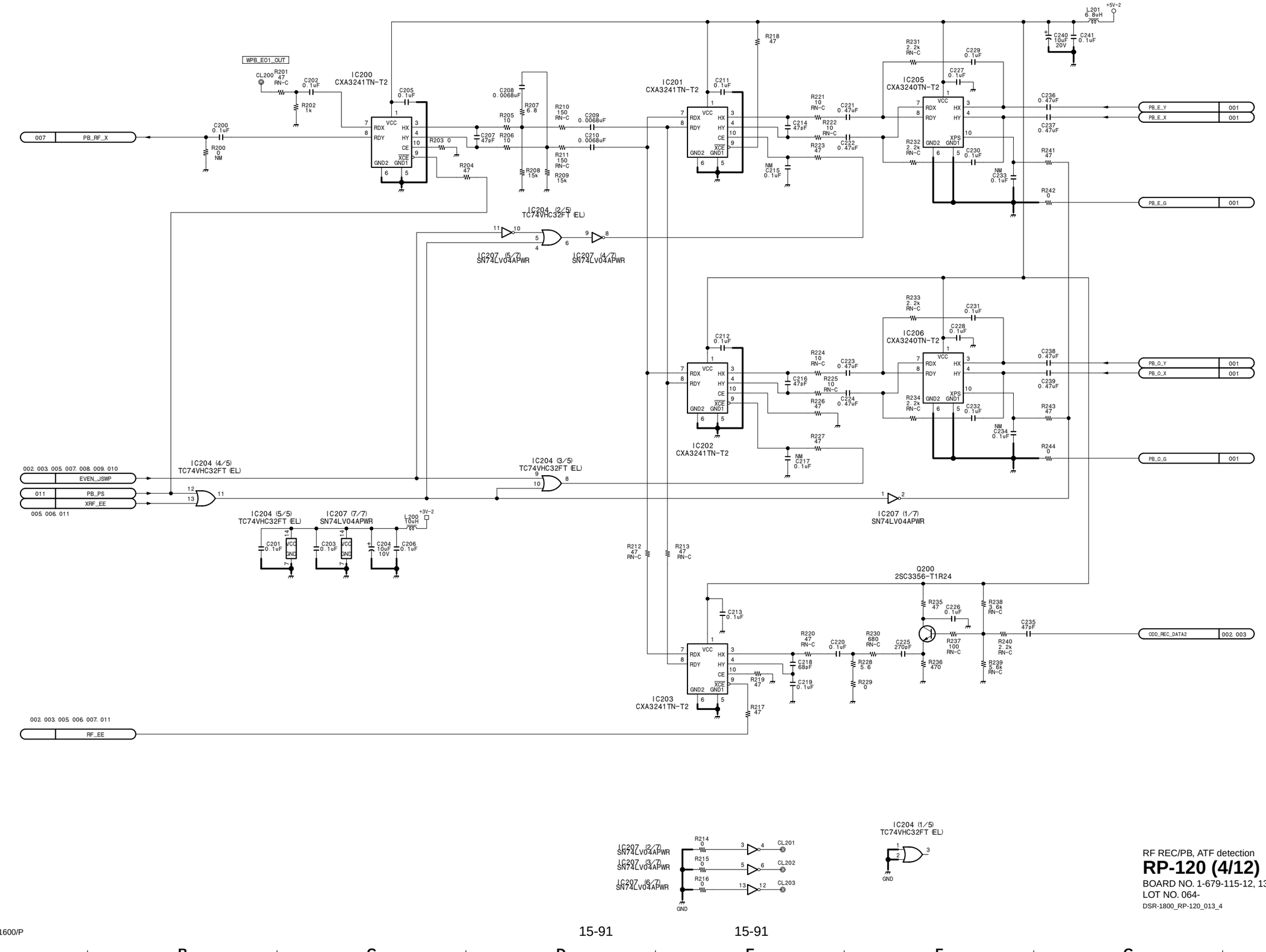

RF REC/PB, ATF detection

RP-120 (4/12)

BOARD NO. 1-679-115-12, 13
LOT NO. 064-

DSR-1800_RP-120_013_4

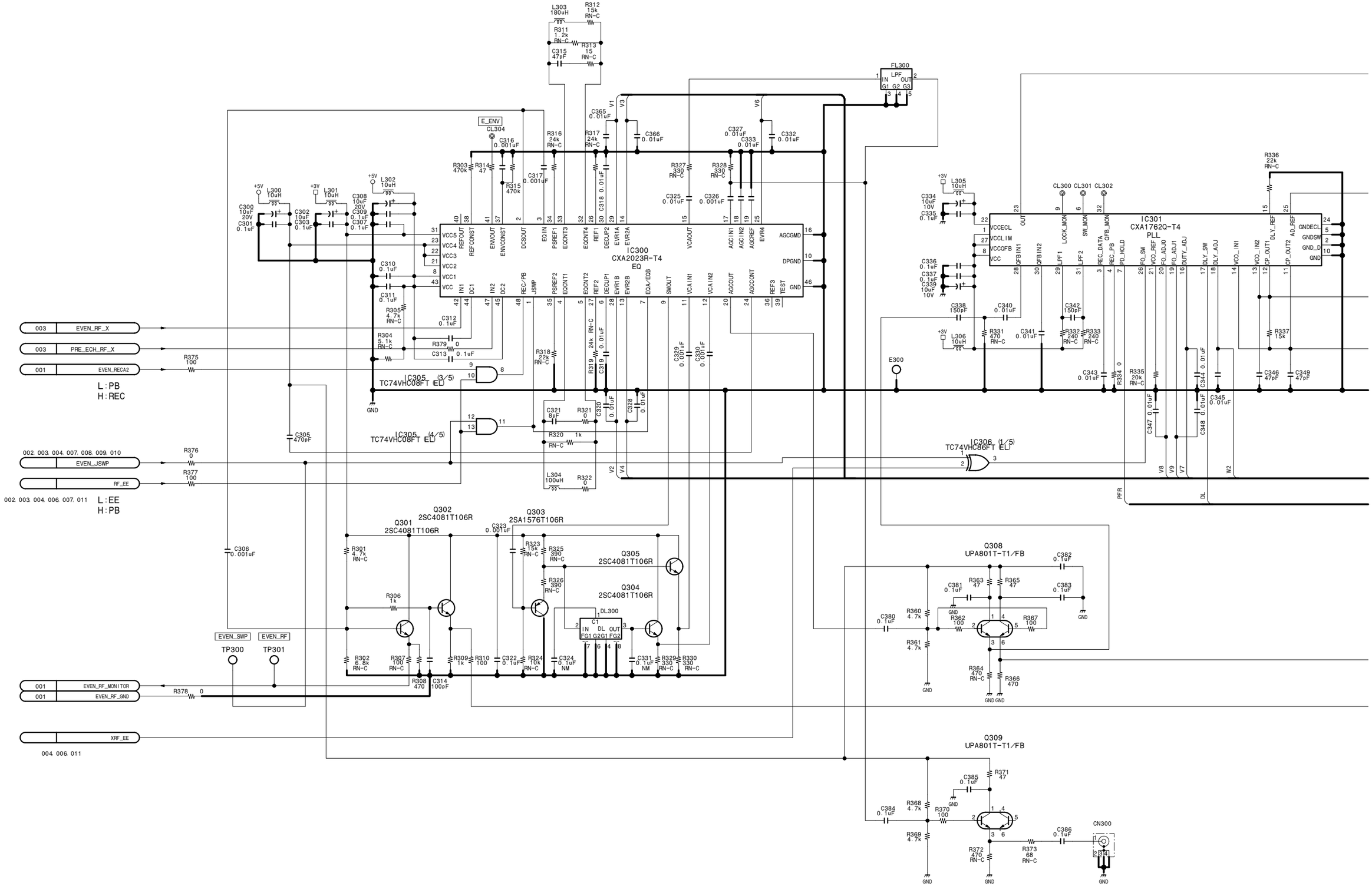
IC300
CXA2023R-T4
EQ
IC301
CXA1762Q-T4
PLL
IC305 (3/5)
TC74VHC08FT (EL)
IC305 (4/5)
TC74VHC08FT (EL)
IC306 (1/5)
TC74VHC86FT (EL)
FL300
E_ENV
CL304
E300
CL300 CL301 CL302
Q301
2SC4081T106R
Q302
2SC4081T106R
Q303
2SA1576T106R
Q304
2SC4081T106R
Q305
2SC4081T106R
Q308
UPA801T-T1/FB
Q309
UPA801T-T1/FB
DL300
TP300
TP301
EVEN_SWP
EVEN_RF
003 EVEN_RF_X
003 PRE_ECH_RF_X
001 EVEN_RECA2
L:PB
H:REC
002. 003. 004. 007. 008. 009. 010 EVEN_JSWP
RF_EE
002. 003. 004. 006. 007. 011 L:EE H:PB
001 EVEN_RF_MONITOR
001 EVEN_RF_GND
XRF_EE
004. 006. 011
CN300
GND

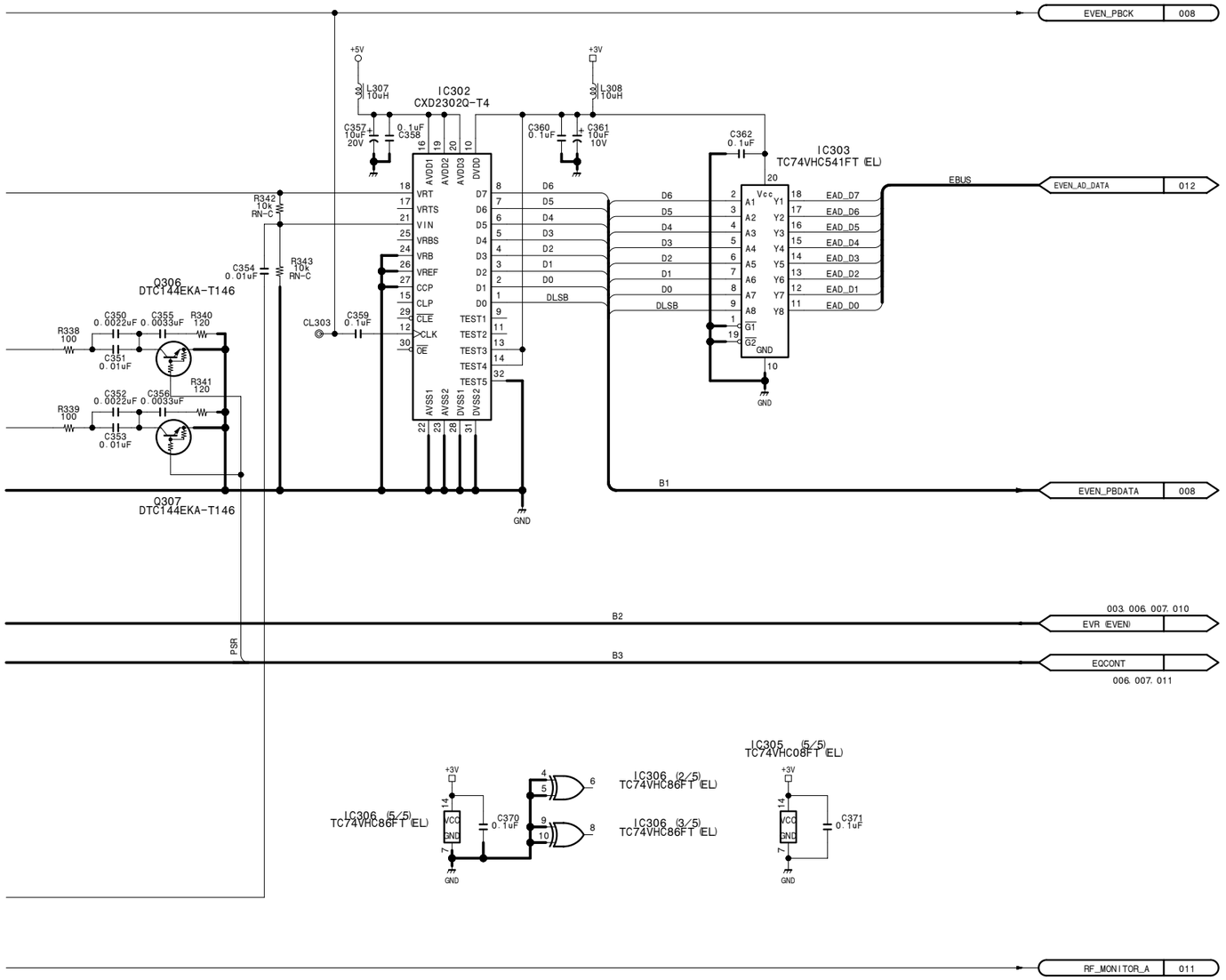

RF REC/PB, ATF detection

RP-120 (5/12)

BOARD NO. 1-679-115-12, 13
LOT NO. 064-
DSR-1800_RP-120_013_5

RP-120 (6/12)

1

2

3

4

5

IC400 CXA2023R-T4 EQ

IC401 CXA1762Q-T4 PLL

IC305 (1/5) TC74VHC08FT (EL)

IC305 (2/5) TC74VHC08FT (EL)

IC306 (4/5) TC74VHC86FT (EL)

FL400 LPF

E400

Q401 2SC4081T106R

Q402 2SC4081T106R

Q403 2SA1576T106R

Q404 2SC4081T106R

Q405 2SC4081T106R

Q408 UPA801T-T1/FB

Q409 UPA801T-T1/FB

DL400

CN400

TP400

TP401

003 ODD_RF_X

003 PRE_OCH_RF_X

001 ODD_RECA2

L : PB
H : REC

002. 003. 007. 008. 010 ODD_JSWP

RF_EE

002. 003. 004. 005. 007. 011

L : EE
H : PB

001 ODD_RF_MONITOR

001 ODD_RF_GND

XRF_EE

004. 005. 011

15-94

A B C D E F G H

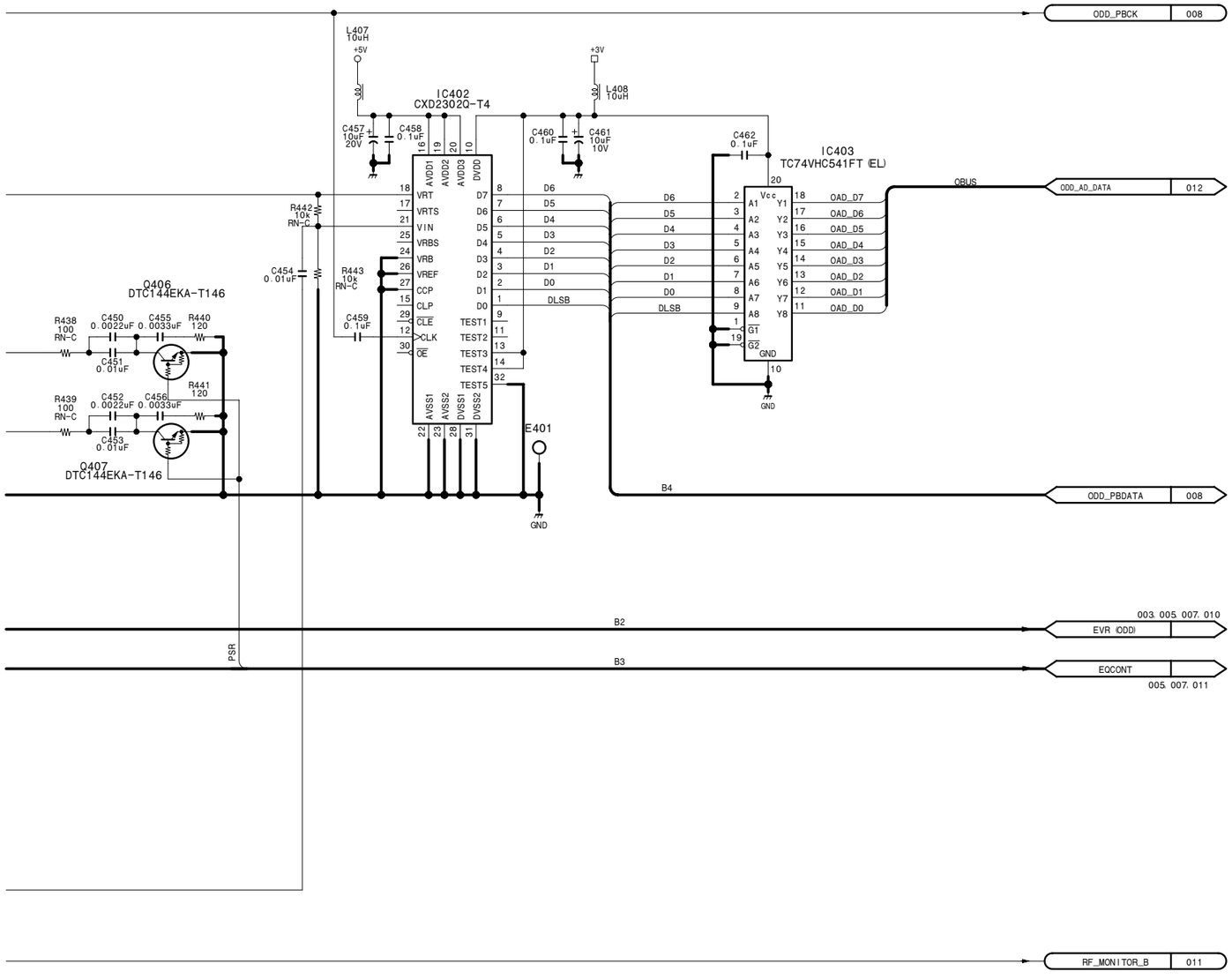

RF REC/PB, ATF detection

RP-120 (6/12)

BOARD NO. 1-679-115-12, 13
LOT NO. 064-

DSR-1800_RP-120_013_6

RP-120 (7/12)

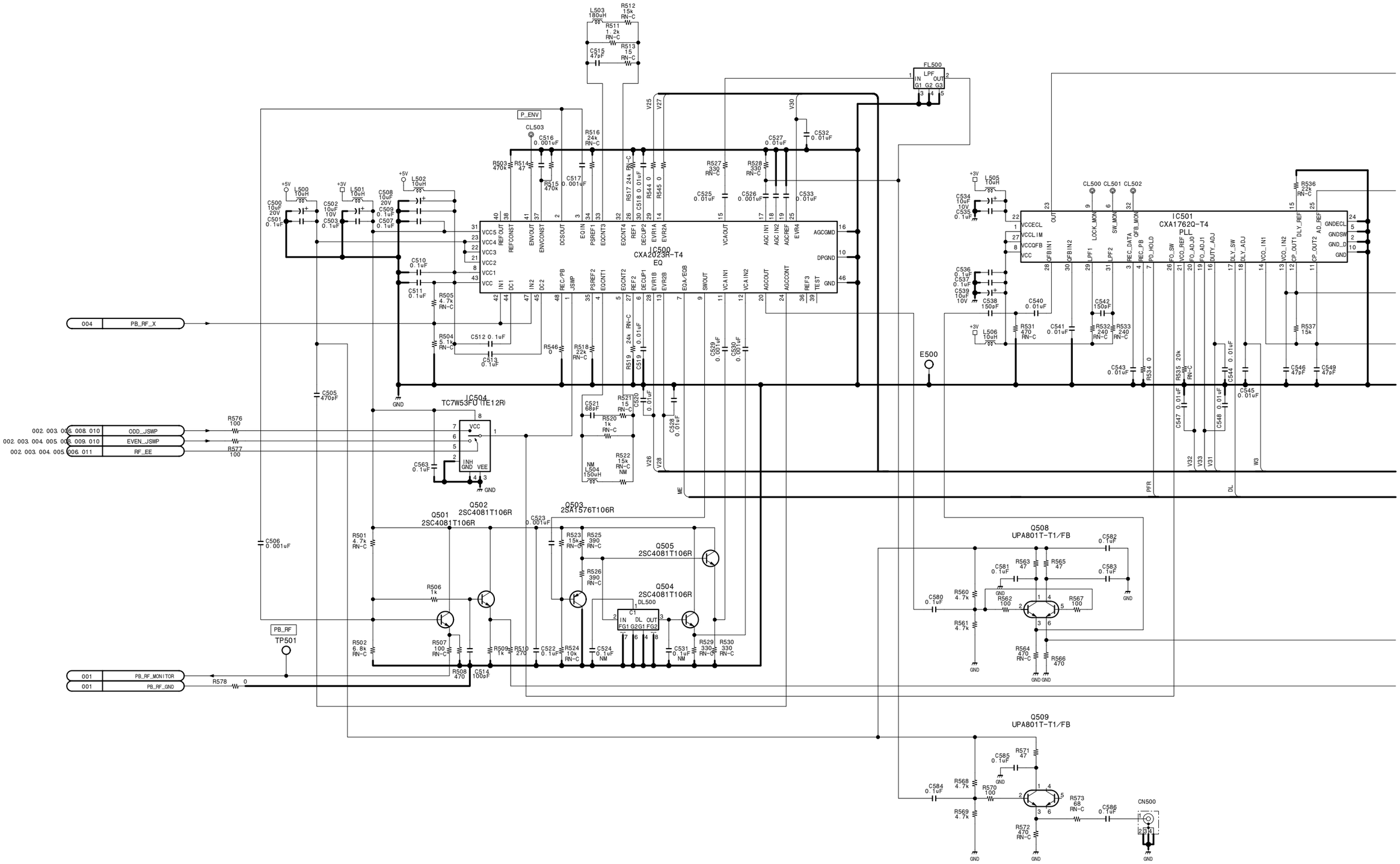
IC500
CXA2023R-T4
EQ
IC501
CXA1762Q-T4
PLL
IC504
TC7W53FU (TE12R)
Q501
2SC4081T106R
Q502
2SC4081T106R
Q503
2SA1576T106R
Q504
2SC4081T106R
Q505
2SC4081T106R
Q508
UPA801T-T1/FB
Q509
UPA801T-T1/FB
FL500
E500
TP501
CN500
P_ENV
PB_RF
004 PB_RF_X
002. 003. 006. 008. 010 ODD_JSWP
002. 003. 004. 005. 009. 010 EVEN_JSWP
002. 003. 004. 005. 006. 011 RF_EE
001 PB_RF_MONITOR
001 PB_RF_GND
GND
+5V
+3V

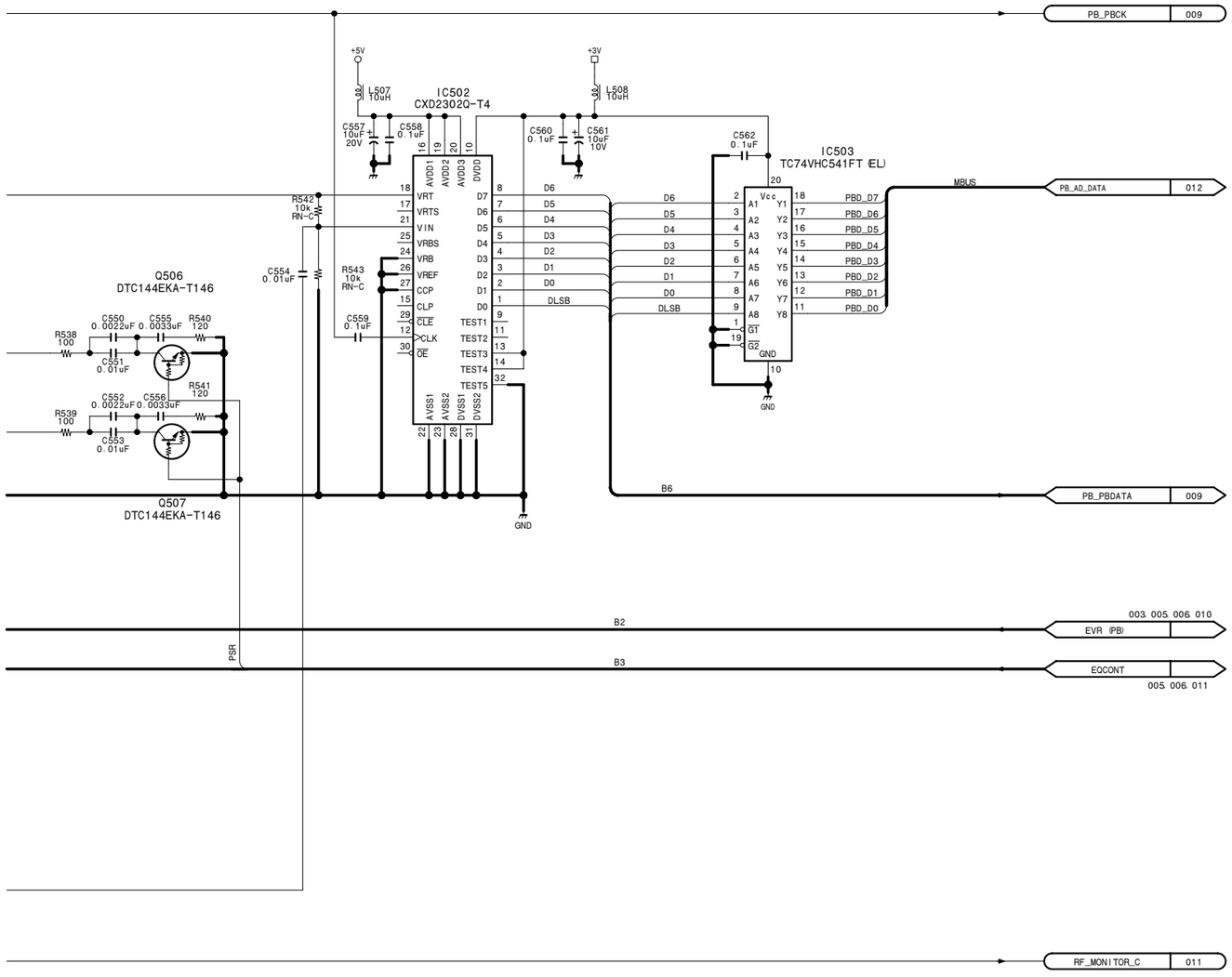

RF REC/PB, ATF detection

RP-120 (7/12)

BOARD NO. 1-679-115-12, 13
LOT NO. 064-
DSR-1800_RP-120_013_7

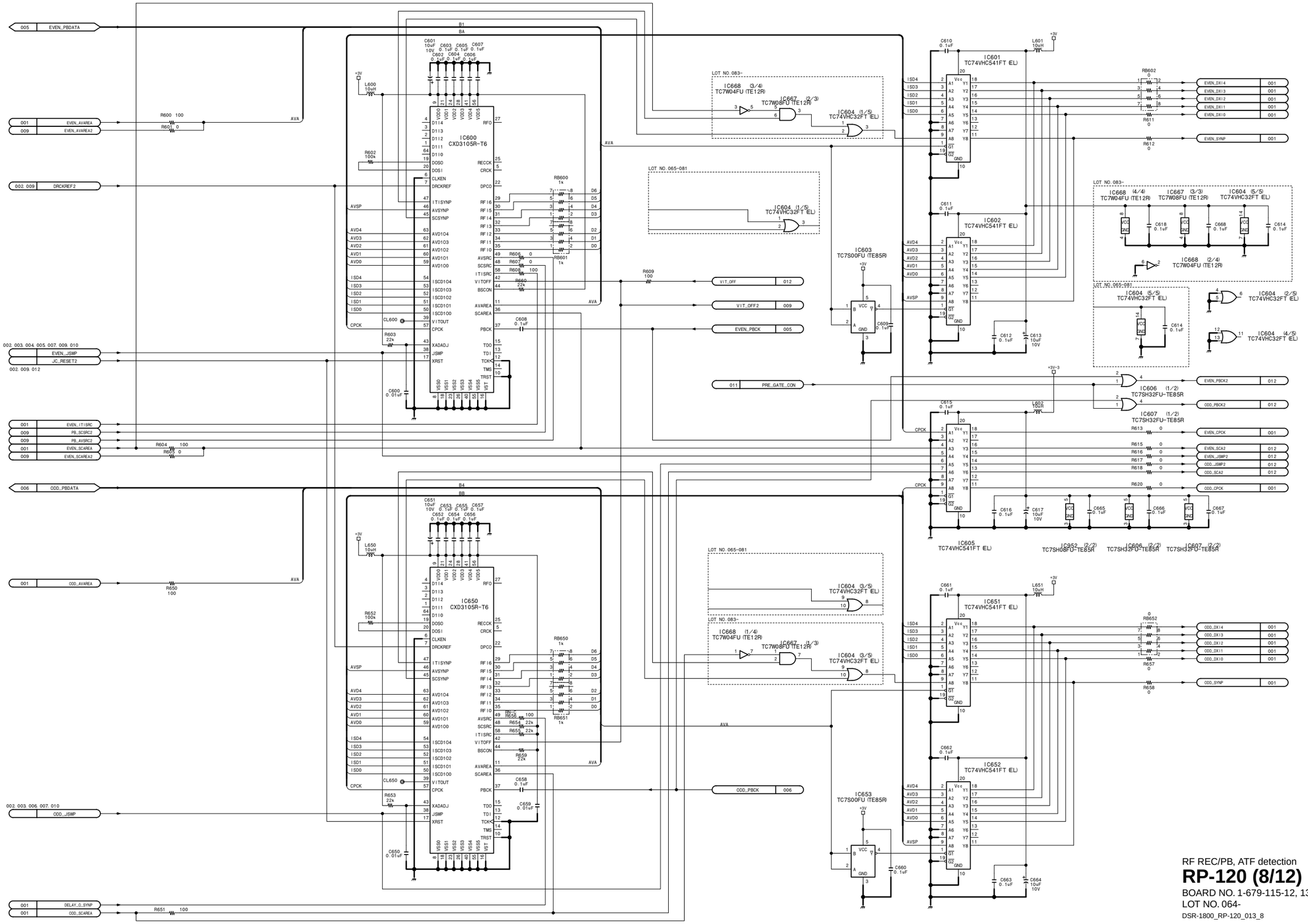
005 EVEN_PBDATA
001 EVEN_AVAREA
009 EVEN_AVAREA2
002. 009 DRCKREF2
002. 003. 004. 005. 007. 009. 010 EVEN_JSWP
JC_RESET2
002. 009. 012
001 EVEN_IT1SRC
009 PB_SCSRC2
009 PB_AVSRC2
001 EVEN_SCAREA
009 EVEN_SCAREA2
006 ODD_PBDATA
001 ODD_AVAREA
002. 003. 006. 007. 010 ODD_JSWP
001 DELAY_0_SYNP
001 ODD_SCAREA
IC600 CXD3105R-T6
IC650 CXD3105R-T6
IC601 TC74VHC541FT (EL)
IC602 TC74VHC541FT (EL)
IC605 TC74VHC541FT (EL)
IC651 TC74VHC541FT (EL)
IC652 TC74VHC541FT (EL)
IC603 TC7S00FU (TE85R)
IC653 TC7S00FU (TE85R)
IC668 (3/4) TC7W04FU (TE12R)
IC667 (2/3) TC7W08FU (TE12R)
IC604 (1/5) TC74VHC32FT (EL)
IC604 (2/5) TC74VHC32FT (EL)
IC604 (3/5) TC74VHC32FT (EL)
IC604 (4/5) TC74VHC32FT (EL)
IC604 (5/5) TC74VHC32FT (EL)
IC668 (4/4) TC7W04FU (TE12R)
IC667 (3/3) TC7W08FU (TE12R)
IC668 (2/4) TC7W04FU (TE12R)
IC606 (1/2) TC7SH32FU-TE85R
IC607 (1/2) TC7SH32FU-TE85R
IC652 (2/2) TC7SH08FU-TE85R
IC606 (2/2) TC7SH32FU-TE85R
IC607 (2/2) TC7SH32FU-TE85R
LOT NO.083-
LOT NO.065-081
VIT_OFF 012
VIT_OFF2 009
EVEN_PBCK 005
011 PRE_GATE_CON
ODD_PBCK 006
EVEN_DX14 001
EVEN_DX13 001
EVEN_DX12 001
EVEN_DX11 001
EVEN_DX10 001
EVEN_SYNP 001
EVEN_PBCK2 012
ODD_PBCK2 012
EVEN_CPCK 001
EVEN_SCA2 012
EVEN_JSWP2 012
ODD_JSWP2 012
ODD_SCA2 012
ODD_CPCK 001
ODD_DX14 001
ODD_DX13 001
ODD_DX12 001
ODD_DX11 001
ODD_DX10 001
ODD_SYNP 001
AVA
AVSP
CPCK
RF REC/PB, ATF detection
RP-120 (8/12)
BOARD NO. 1-679-115-12, 13
LOT NO. 064-
DSR-1800_RP-120_013_8

http://getMANUAL.com

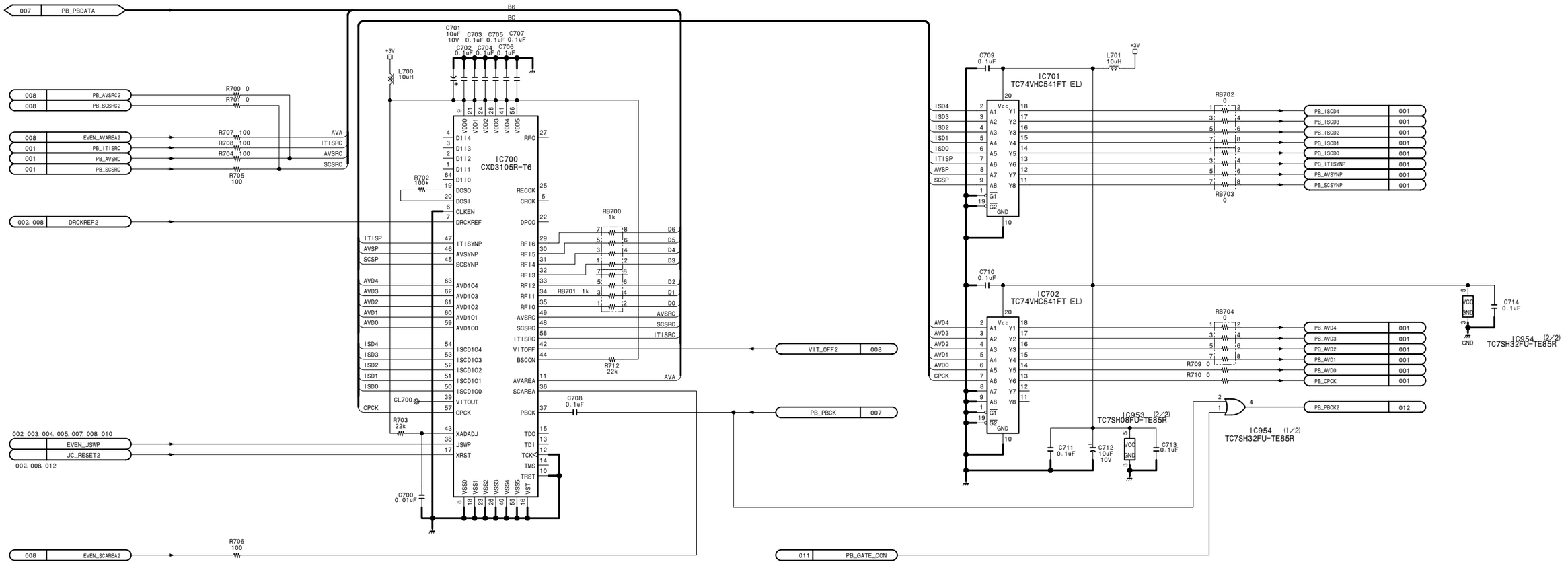

RF REC/PB, ATF detection

RP-120 (9/12)

BOARD NO. 1-679-115-12, 13
LOT NO. 064-
DSR-1800_RP-120_013_9

RP-120 (10/12)

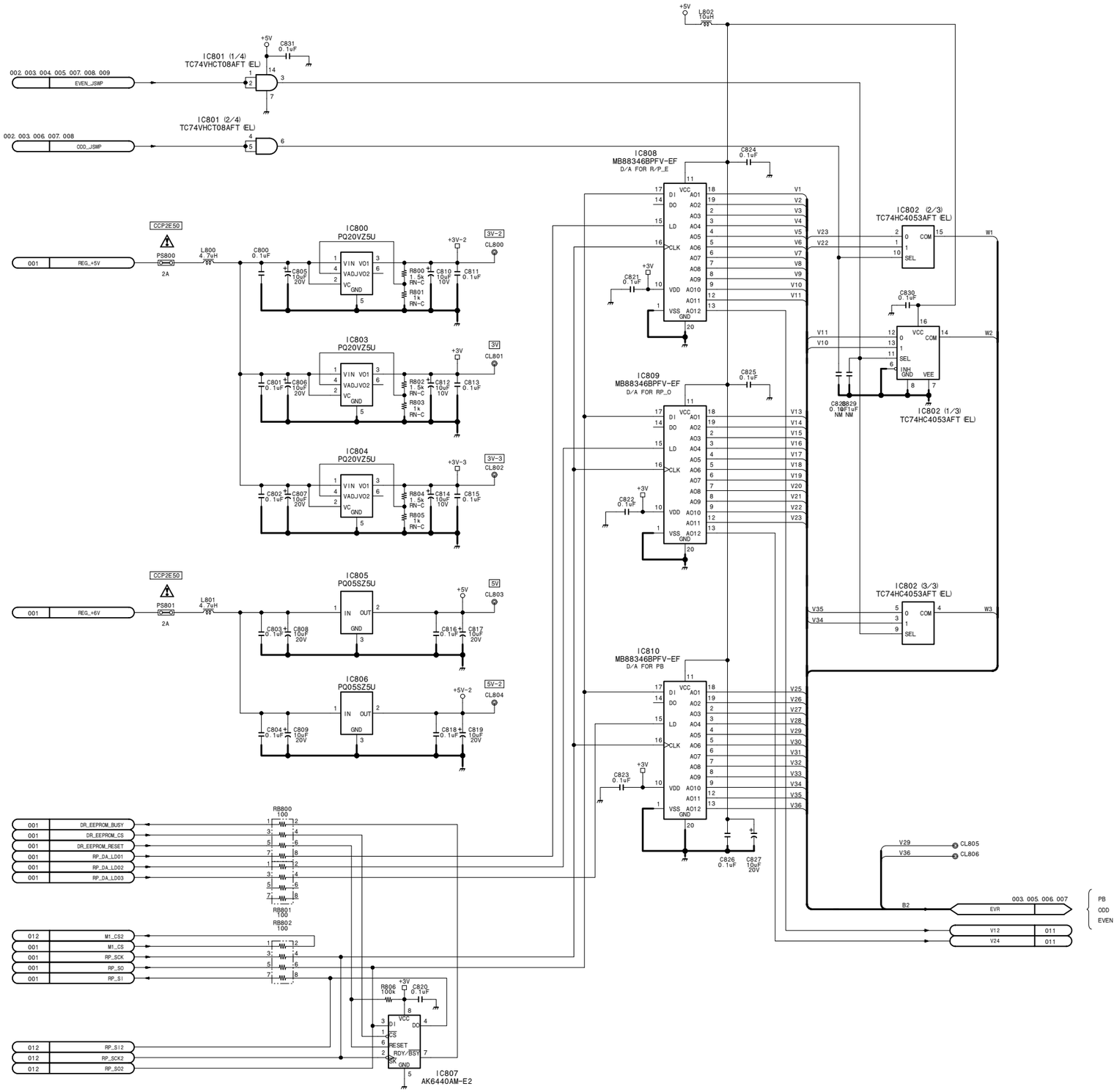

RF REC/PB, ATF detection

RP-120 (10/12)

BOARD NO. 1-679-115-12, 13
LOT NO. 064-

DSR-1800_RP-120_013_10

15-100

DSR-1800/P/1600/P

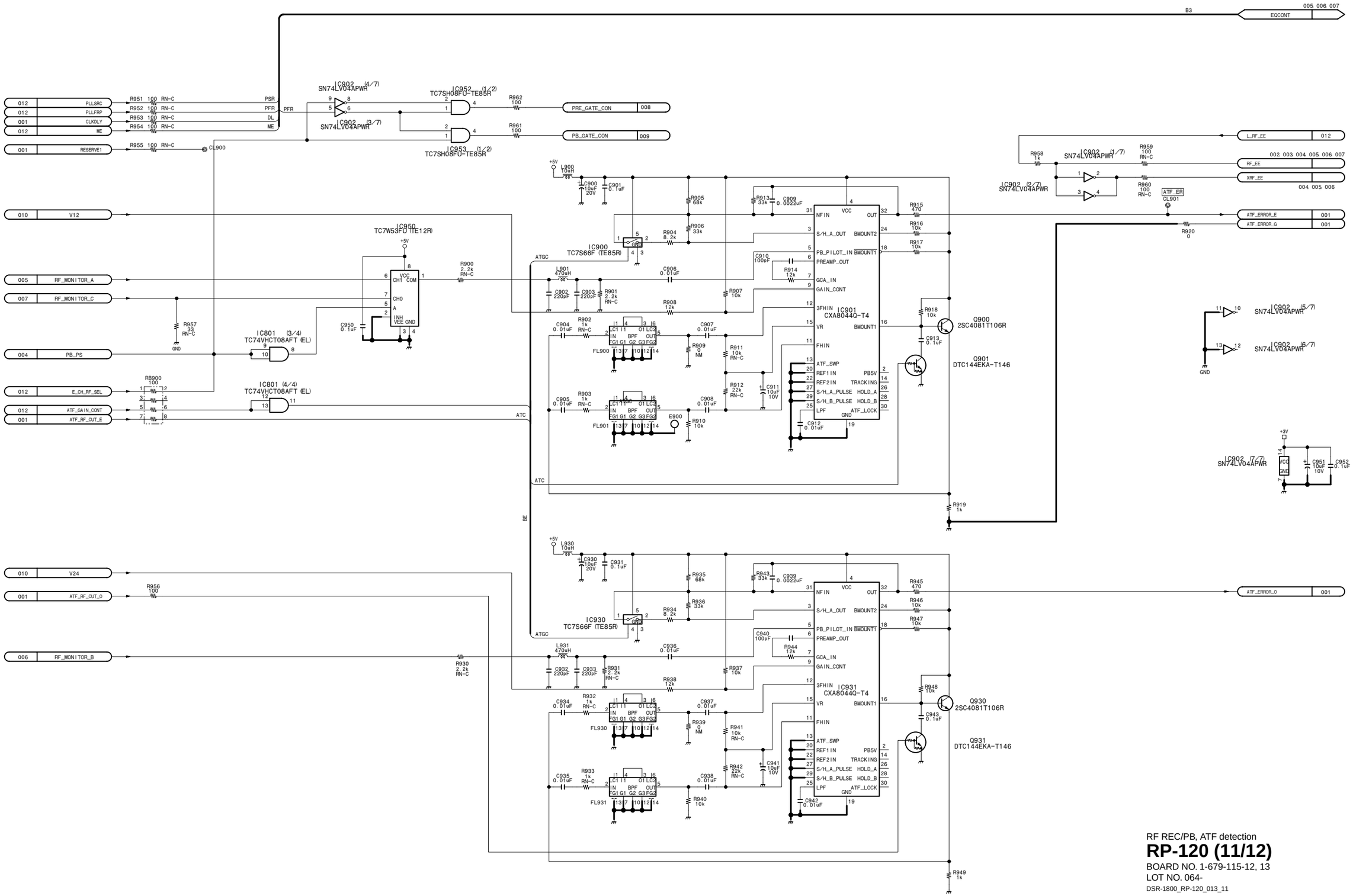

RF REC/PB, ATF detection

RP-120 (11/12)

BOARD NO. 1-679-115-12, 13
LOT NO. 064-

DSR-1800_RP-120_013_11

RP-120 (12/12)

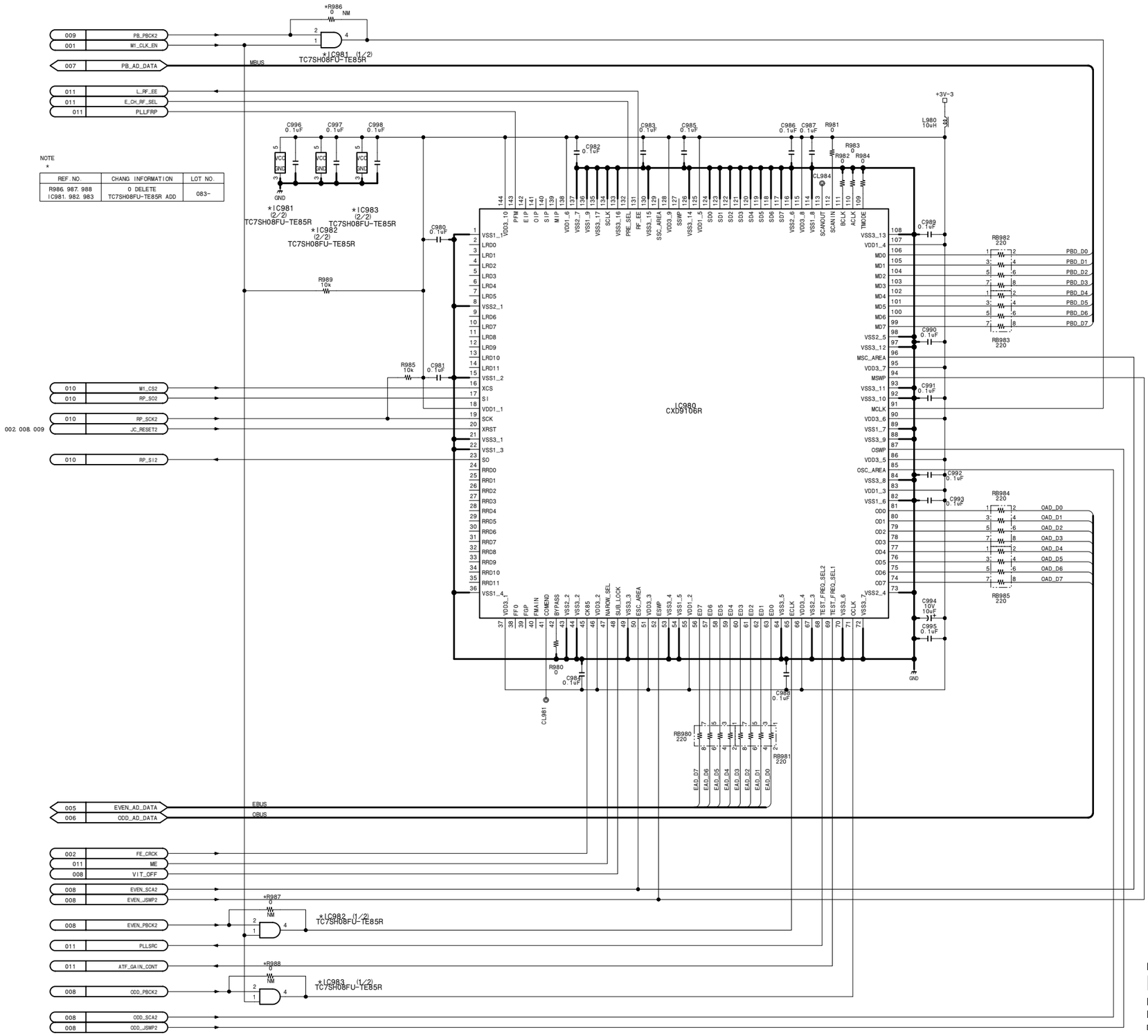

RF REC/PB, ATF detection

RP-120 (12/12)

BOARD NO. 1-679-115-12, 13
LOT NO. 064-
DSR-1800_RP-120_013_12

SDI-61/61A (1/4)

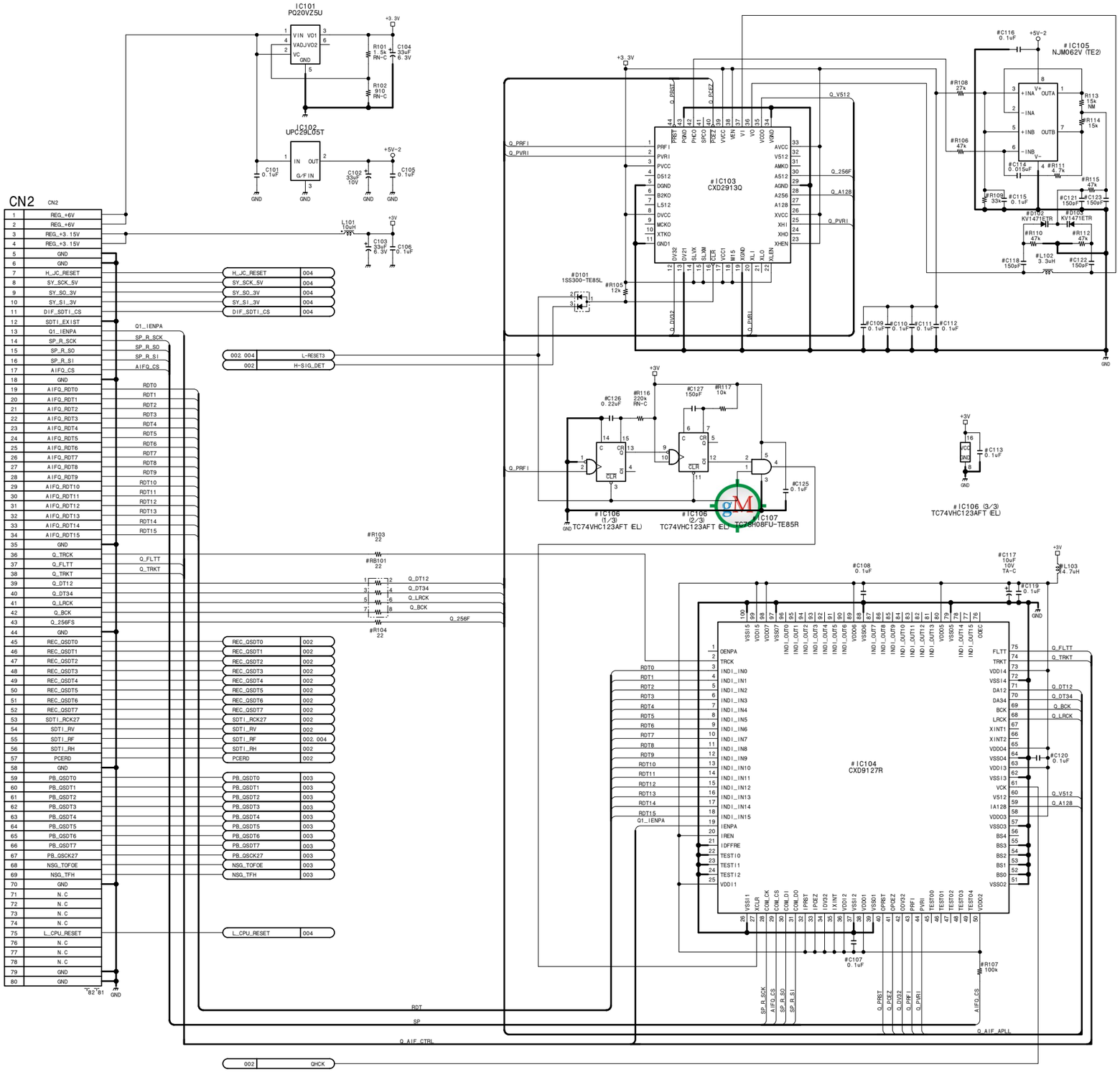

#	REC	PB
C107	0.1uF 16V B	NM
C108	0.1uF 16V B	NM
C109	0.1uF 16V B	NM
C110	0.1uF 16V B	NM
C111	0.1uF 16V B	NM
C112	0.1uF 16V B	NM
C113	0.1uF 16V B	NM
C114	0.015uF 50V B	NM
C115	0.1uF 16V B	NM
C116	0.1uF 16V B	NM
C117	10uF 10V 20%	NM
C118	150pF 50V CH	NM
C119	0.1uF 16V B	NM
C120	0.1uF 16V B	NM
C121	150pF 50V CH	NM
C122	150pF 50V CH	NM
C123	150pF 50V CH	NM
C125	0.1uF 16V B	NM
C126	0.22uF 10V B	NM
C127	150pF 50V CH	NM
D101	1SS300-TE8	NM
D102	KV1471ETR	NM
D103	KV1471ETR	NM
IC103	CXD2913Q	NM
IC104	CXD9127R	NM
IC105	NJM062V (TE)	NM
IC106	TC74VHC123	NM
IC107	TC7SH08FU-	NM
L102	3.3uH 10%	NM
L103	4.7uH 20%	NM

#	REC	PB
R103	22 1/16W 5%	NM
R104	22 1/16W 5%	NM
R105	12k 1/16W 0.5%	NM
R106	47k 1/16W 5%	NM
R107	100k 1/16W 5%	NM
R108	27k 1/16W 5%	NM
R109	33k 1/16W 5%	NM
R110	47k 1/16W 5%	NM
R111	4.7k 1/16W 5%	NM
R112	47k 1/16W 5%	NM
R114	15k 1/16W 0.5%	NM
R115	47k 1/16W 5%	NM
R116	220k 1/16W 0.5%	NM
R117	10k 1/16W 5%	NM
PB101	22	NM

SDTI (QSDI) input/output board (Option: DSBK-1802)

SDI-61 (1/4)

SDTI (QSDI) output board (Option: DSBK-1602)

SDI-61A (1/4)

BOARD NO. 1-679-106-12
LOT NO. 064-
DSBK-1802_SDI-61_012_1

15-104

SDI-61/61A (2/4)

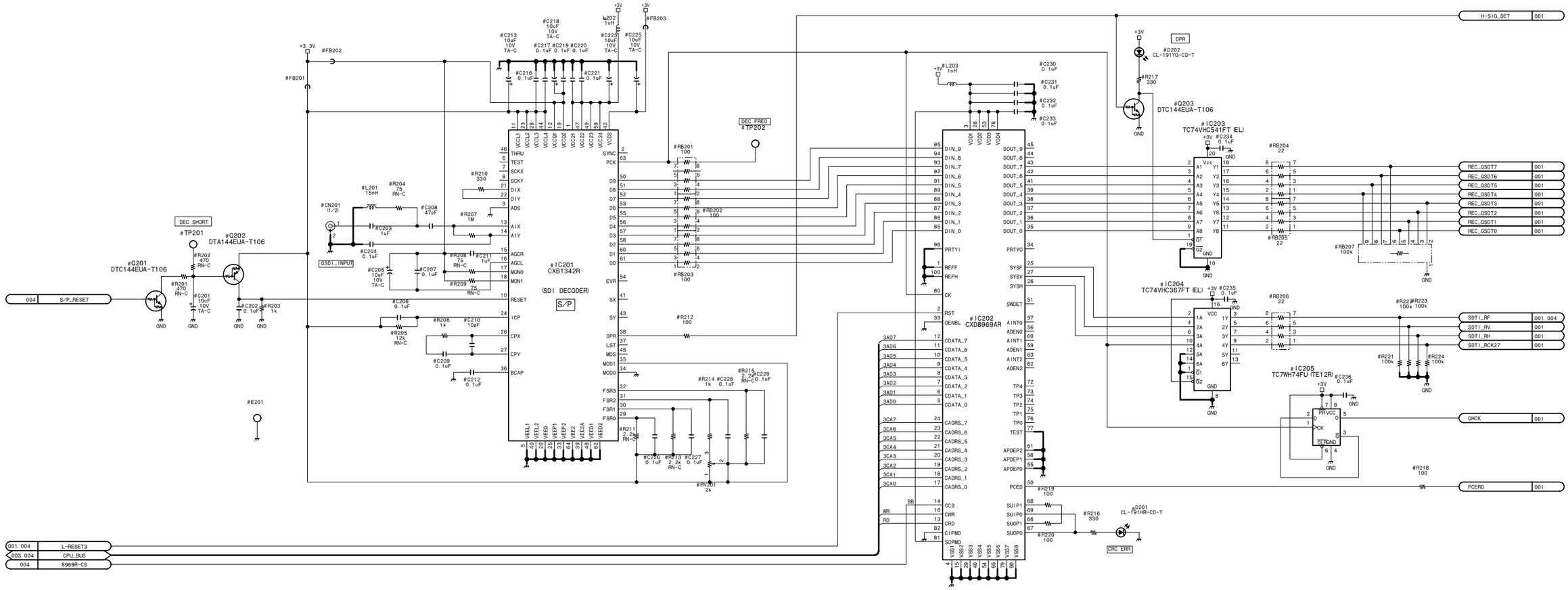

#	REC	P/B
C201	10uF 10V 20%	NM
C202	0.1uF 16V B	NM
C203	1uF 10V B	NM
C204	0.1uF 16V B	NM
C205	10uF 10V 20%	NM
C206	0.1uF 16V B	NM
C207	0.1uF 16V B	NM
C208	47pF 50V CH	NM
C209	0.1uF 16V B	NM
C210	10pF 50V CH	NM
C211	1uF 10V B	NM
C212	0.1uF 16V B	NM
C213	10uF 10V 20%	NM
C216	0.1uF 16V B	NM
C217	0.1uF 16V B	NM
C218	10uF 10V 20%	NM
C219	0.1uF 16V B	NM
C220	0.1uF 16V B	NM
C221	0.1uF 16V B	NM
C223	10uF 10V 20%	NM
C225	10uF 10V 20%	NM
C226	0.1uF 16V B	NM
C227	0.1uF 16V B	NM
C228	0.1uF 16V B	NM
C229	0.1uF 16V B	NM
C230	0.1uF 16V B	NM
C231	0.1uF 16V B	NM
C232	0.1uF 16V B	NM
C233	0.1uF 16V B	NM
C234	0.1uF 16V B	NM
C235	0.1uF 16V B	NM
C236	0.1uF 16V B	NM
CN201	17948511	17948611
D201	CL-191HR-C	NM
D202	CL-191YG-C	NM
E201	1535877 22	NM
FB201	——	NM
FB202	——	NM
FB203	——	NM
IC201	CXB1342R	NM
IC202	CXD8969AR	NM
IC203	TC74VHC541	NM
IC204	TC74VHC367	NM
IC205	TC7WH74FU	NM
L201	15nH	NM
L202	1uH 5%	NM
L203	1uH 5%	NM
Q201	DTC144EUA-	NM
Q202	DTA144EUA-	NM
Q203	DTC144EUA-	NM

#	REC	P/B
R201	470 1/16W 0.5%	NM
R202	470 1/16W 0.5%	NM
R203	1k 1/16W 5%	NM
R204	75 1/16W 0.5%	NM
R205	12k 1/16W 0.5%	NM
R206	1k 1/16W 5%	NM
R207	1M 1/16W 5%	NM
R208	75 1/16W 0.5%	NM
R209	75 1/16W 0.5%	NM
R210	330 1/16W 5%	NM
R211	2.2k 1/16W 0.5%	NM
R212	100 1/16W 5%	NM
R213	2.2k 1/16W 0.5%	NM
R214	1k 1/16W 5%	NM
R215	2.2k 1/16W 0.5%	NM
R216	330 1/16W 5%	NM
R217	330 1/16W 5%	NM
R218	100 1/16W 5%	NM
R219	100 1/16W 5%	NM
R220	100 1/16W 5%	NM
R221	100x 1/16W 5%	NM
R222	100x 1/16W 5%	NM
R223	100x 1/16W 5%	NM
R224	100x 1/16W 5%	NM
RB201	100	NM
RB202	100	NM
RB203	100	NM
RB204	22	NM
RB205	22	NM
RB206	22	NM
RB207	100x	NM
RV201	2k——	NM
TP201	1535877 22	NM
TP202	1535877 22	NM

SDTI (QSDI) input/output board (Option: DSBK-1802)

SDI-61 (2/4)

SDTI (QSDI) output board (Option: DSBK-1602)

SDI-61A (2/4)

BOARD NO. 1-679-106-12
LOT NO. 064-
DSBK-1802_SDI-61_012_2

SDI-61/61A (3/4)

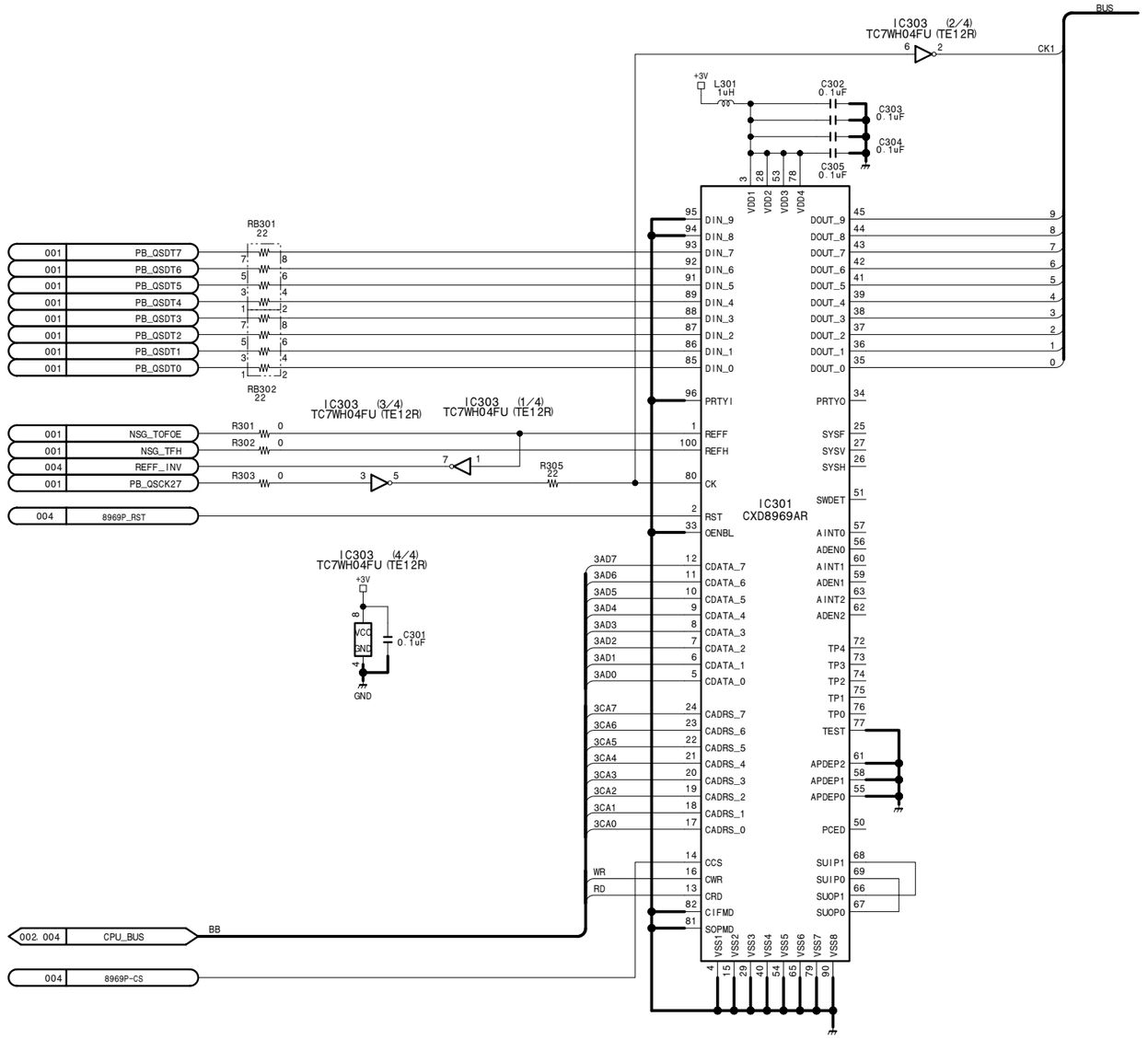

15-106

SDI-61/61A (3/4)

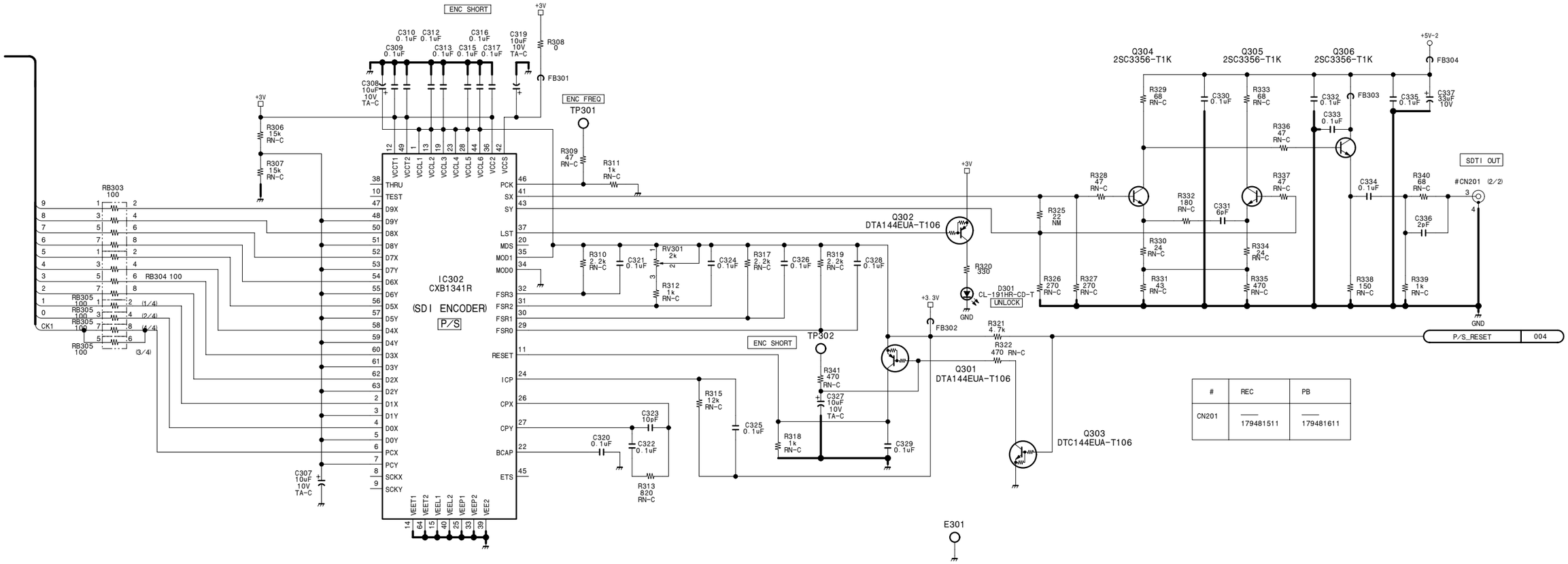

#	REC	PB
CN201	—— 179481511	—— 179481611

SDTI (QSDI) input/output board (Option: DSBK-1802)

SDI-61 (3/4)

SDTI (QSDI) output board (Option: DSBK-1602)

SDI-61A (3/4)

BOARD NO. 1-679-106-12

LOT NO. 064-

DSBK-1802_SDI-61_012_3

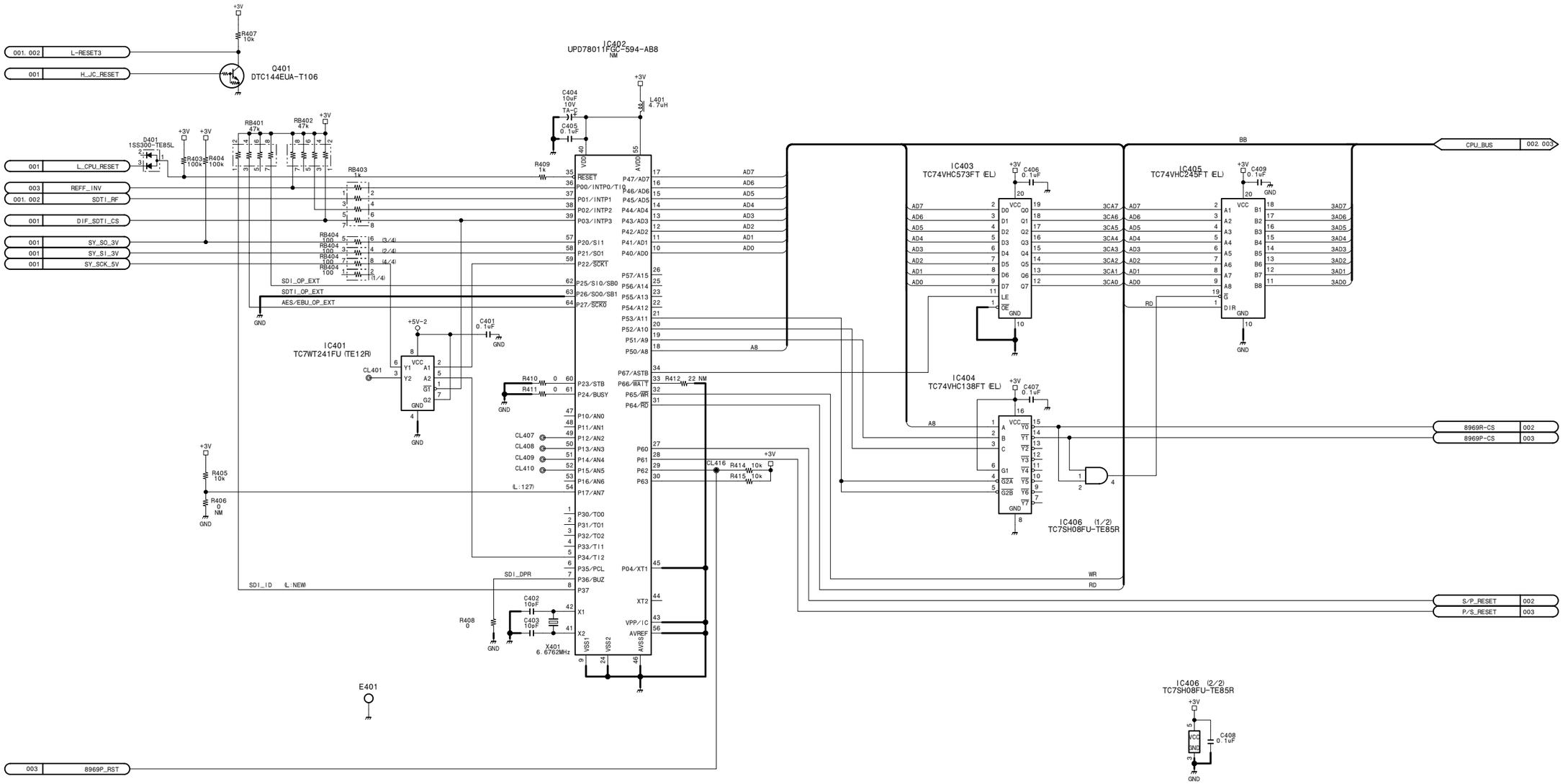

SDTI (QSDI) input/output board (Option: DSBK-1802)

SDI-61 (4/4)

SDTI (QSDI) output board (Option: DSBK-1602)

SDI-61A (4/4)

BOARD NO. 1-679-106-12
LOT NO. 064-
DSBK-1802_SDI-61_012_4

http://getMANUAL.com

SDI-62/62A (1/7)

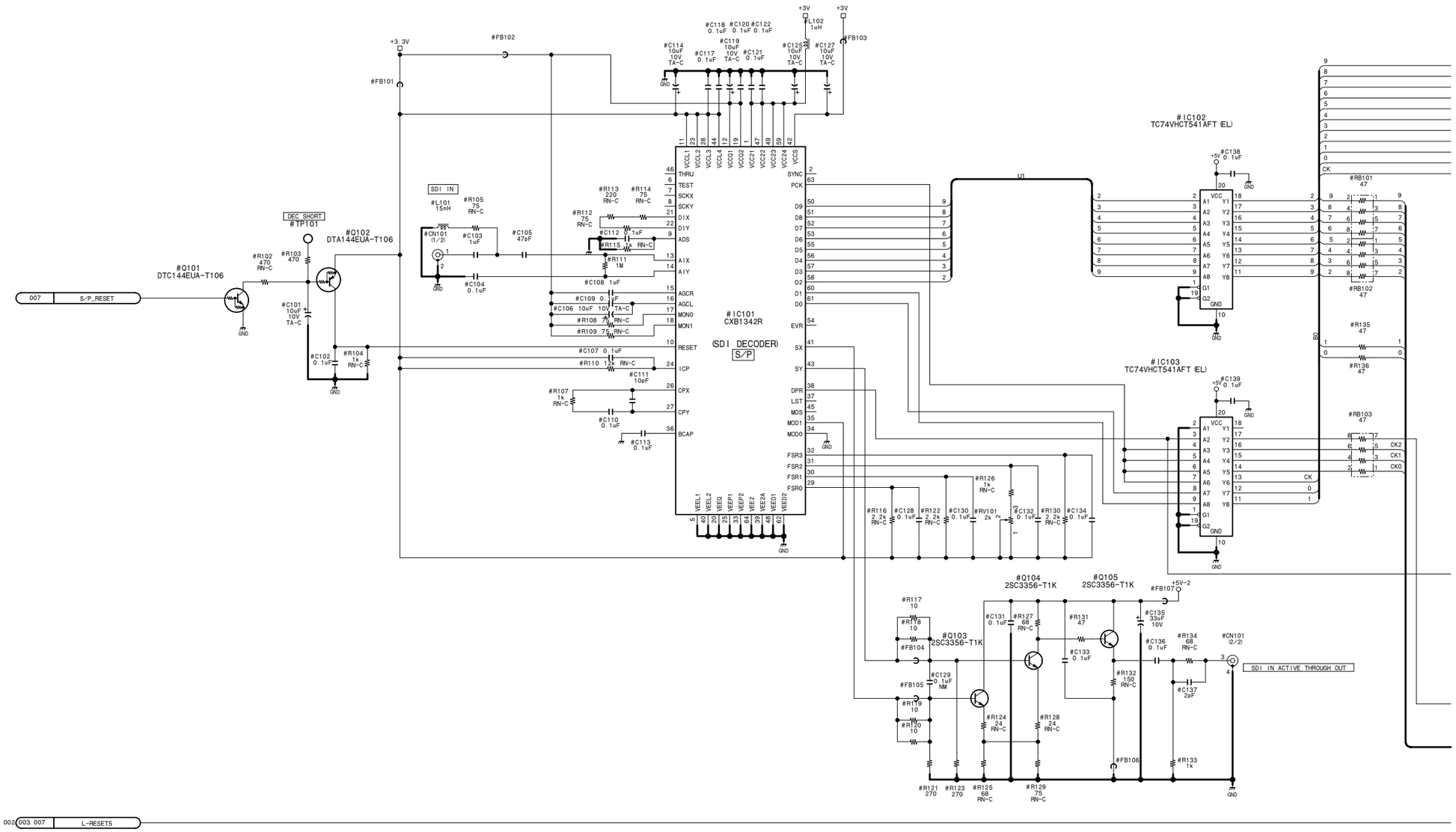

15-110

SDI-62/62A (1/7)

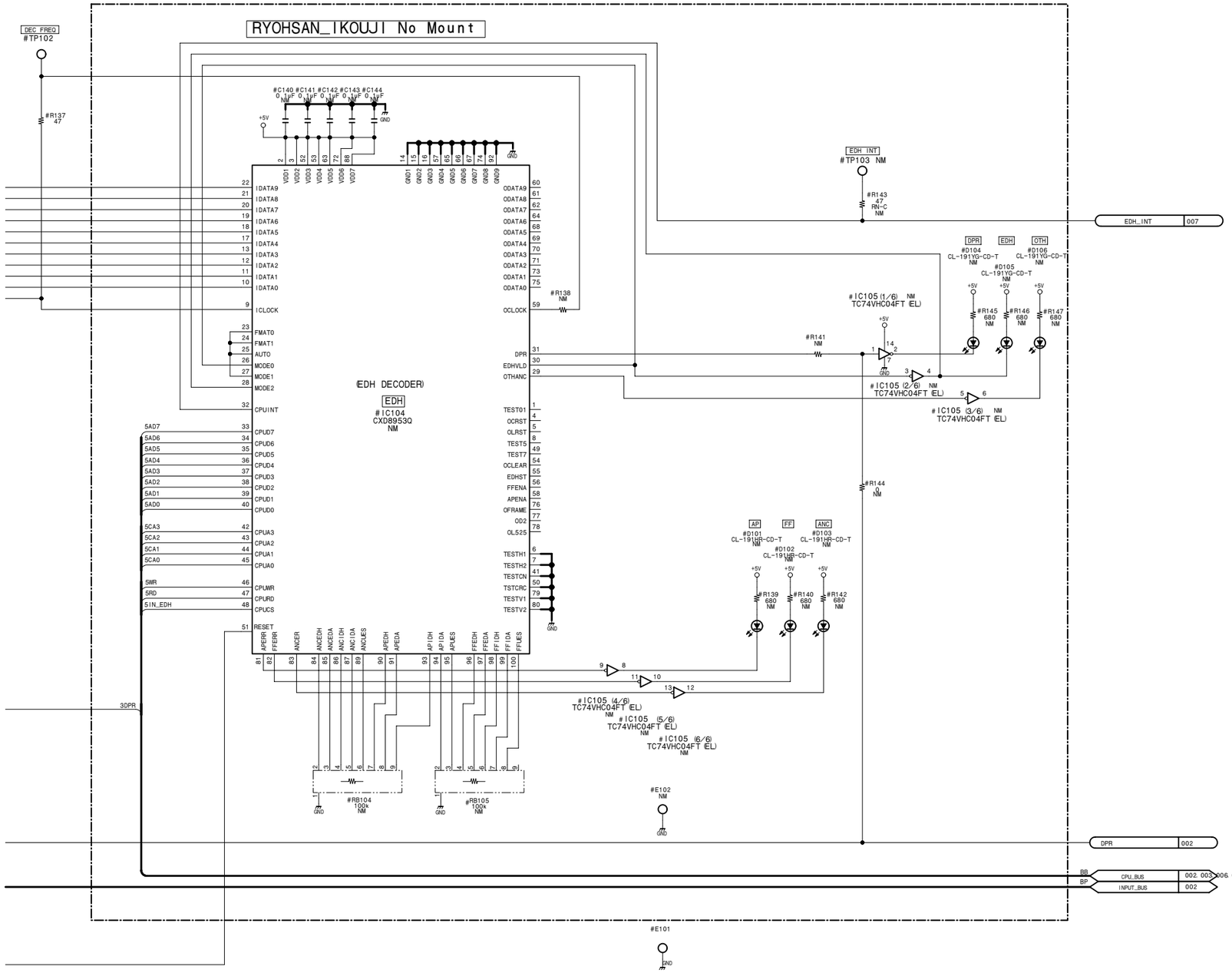

#	REC	PB
C101	10uF 10V 20%	NM
C102	0.1uF 16V B	NM
C103	1uF 10V B	NM
C104	0.1uF 16V B	NM
C105	47pF 50V CH	NM
C106	10uF 10V 20%	NM
C107	0.1uF 16V B	NM
C108	1uF 10V B	NM
C109	0.1uF 16V B	NM
C110	0.1uF 16V B	NM
C111	10pF 50V CH	NM
C112	0.1uF 16V B	NM
C113	0.1uF 16V B	NM
C114	10uF 10V 20%	NM
C117	0.1uF 16V B	NM
C118	0.1uF 16V B	NM
C119	10uF 10V 20%	NM
C120	0.1uF 16V B	NM
C121	0.1uF 16V B	NM
C122	0.1uF 16V B	NM
C125	10uF 10V 20%	NM
C127	10uF 10V 20%	NM
C128	0.1uF 16V B	NM
C130	0.1uF 16V B	NM
C131	0.1uF 16V B	NM
C132	0.1uF 16V B	NM
C133	0.1uF 16V B	NM
C134	0.1uF 16V B	NM
C135	33uF 10V	NM
C136	0.1uF 16V B	NM

#	REC	PB
C137	2pF 50V CH	NM
C138	0.1uF 16V B	NM
C139	0.1uF 16V B	NM
CN101	—— 179481511	NM
E101	153587722	NM
FB101	——	NM
FB102	——	NM
FB103	——	NM
FB104	——	NM
FB105	——	NM
FB106	——	NM
FB107	——	NM
IC101	CXB1342R	NM
IC102	TC74VHCT54	NM
IC103	TC74VHCT54	NM
L101	15nH 5%	NM
L102	1uH 5%	NM
Q101	DTC144EUA~	NM
Q102	DTA144EUA~	NM
Q103	2SC3356-T1	NM
Q104	2SC3356-T1	NM
Q105	2SC3356-T1	NM
R102	470 1/16W 0.5%	NM
R103	470 1/16W 5%	NM
R104	1k 1/16W 0.5%	NM
R105	75 1/16W 0.5%	NM
R107	1k 1/16W 0.5%	NM
R108	75 1/16W 0.5%	NM
R109	75 1/16W 0.5%	NM
R110	12k 1/16W 0.5%	NM
R111	1M 1/16W 5%	NM
R112	75 1/16W 0.5%	NM
R113	220 1/16W 0.5%	NM
R114	75 1/16W 0.5%	NM
R115	1k 1/16W 0.5%	NM
R116	2.2k 1/16W 0.5%	NM
R117	10 1/16W 5%	NM

#	REC	PB
R118	10 1/16W 5%	NM
R119	10 1/16W 5%	NM
R120	10 1/16W 5%	NM
R121	270 1/16W 0.5%	NM
R122	2.2k 1/16W 0.5%	NM
R123	270 1/16W 0.5%	NM
R124	24 1/16W 0.5%	NM
R125	68 1/16W 0.5%	NM
R126	1k 1/16W 0.5%	NM
R127	68 1/16W 0.5%	NM
R128	24 1/16W 0.5%	NM
R129	75 1/16W 0.5%	NM
R130	2.2k 1/16W 0.5%	NM
R131	47 1/16W 5%	NM
R132	150 1/16W 0.5%	NM
R133	1k 1/16W 5%	NM
R134	68 1/16W 0.5%	NM
R135	47 1/16W 5%	NM
R136	47 1/16W 5%	NM
R137	47 1/16W 5%	NM
PB101	47	NM
PB102	47	NM
PB103	47	NM
RV101	2k ——	NM
TP101	153587722	NM
TP102	153587722	NM

SDI, AES/EBU input/output board (Option: DSBK-1801)

SDI-62 (1/7)

SDI, AES/EBU output board (Option: DSBK-1601)

SDI-62A (1/7)

BOARD NO. 1-679-107-12
LOT NO. 064-
DSBK-1801_SDI-62_012_1

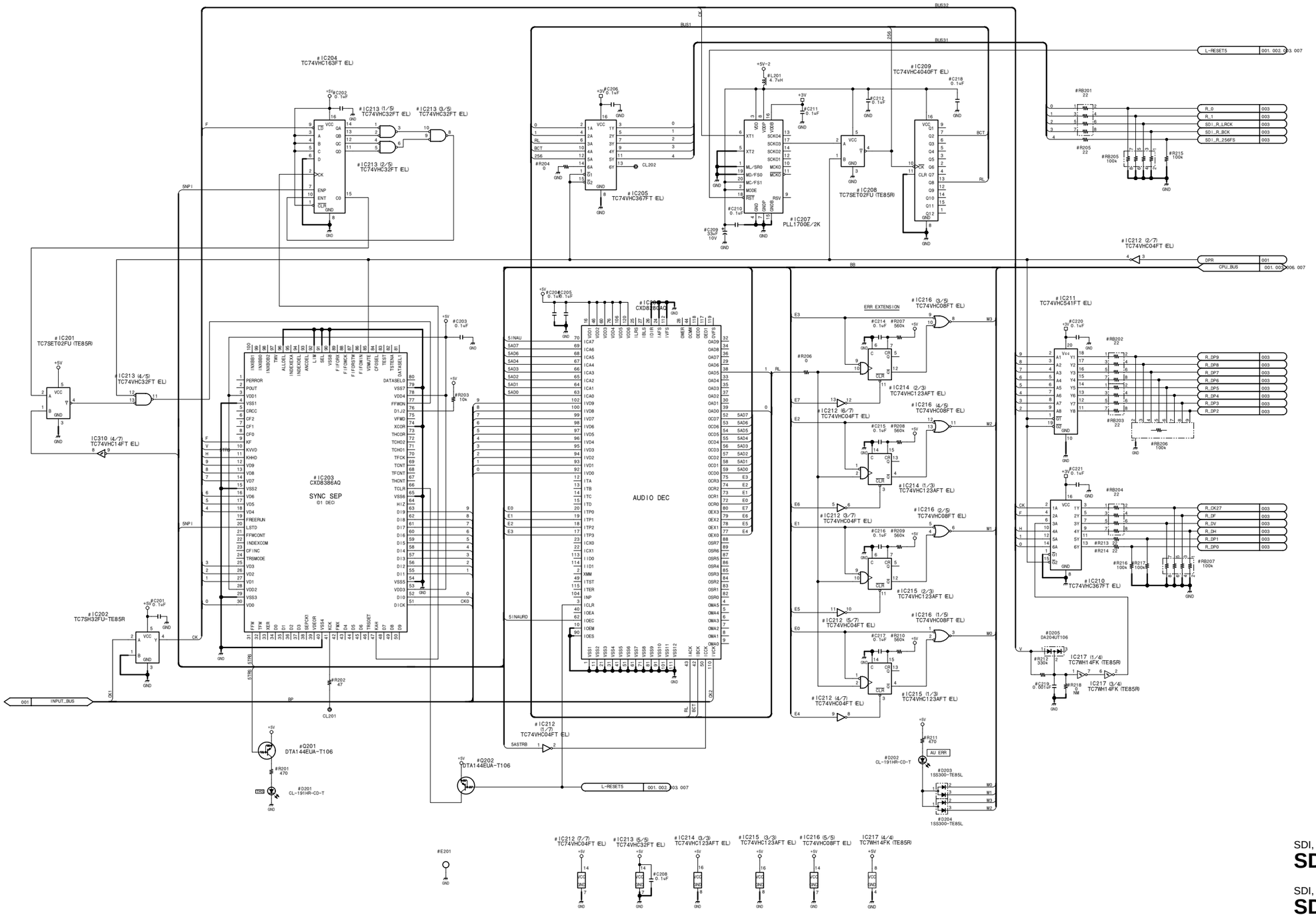

#	REC	PB
C201	0.1uF 16V B	NM
C202	0.1uF 16V B	NM
C203	0.1uF 16V B	NM
C204	0.1uF 16V B	NM
C205	0.1uF 16V B	NM
C206	0.1uF 16V B	NM
C208	0.1uF 16V B	NM
C209	33uF 10V	NM
C210	0.1uF 16V B	NM
C211	0.1uF 16V B	NM
C212	0.1uF 16V B	NM
C214	0.1uF 16V B	NM
C215	0.1uF 16V B	NM
C216	0.1uF 16V B	NM
C217	0.1uF 16V B	NM
C218	0.1uF 16V B	NM
C219	0.001uF 25V CH	NM
C220	0.1uF 16V B	NM
C221	0.1uF 16V B	NM
CL201	CL	NM
CL202	CL	NM
D201	CL-191HR-C	NM
D202	CL-191HR-C	NM
D203	1SS300-TE8	NM
D204	1SS300-TE8	NM
D205	DA204UT106	NM
E201	153587722	NM
IC201	TC7SET02FU	NM
IC202	TC7SH32FU-	NM
IC203	CXD8386AQ	NM
IC204	TC74VHC163	NM
IC205	TC74VHC367	NM
IC206	CXD8280AQ	NM
IC207	PLL1700E/2	NM
IC208	TC7SET02FU	NM
IC209	TC74VHC404	NM
IC210	TC74VHC367	NM
IC211	TC74VHC541	NM
IC212	TC74VHC04F	NM
IC213	TC74VHC32F	NM
IC214	TC74VHC123	NM
IC215	TC74VHC123	NM
IC216	TC74VHC08F	NM
L201	4.7uH 5%	NM
Q201	DTA144EUA-	NM
Q202	DTA144EUA-	NM

#	REC	PB
R201	470 1/16W 5%	NM
R202	47 1/16W 5%	NM
R203	10k 1/16W 5%	NM
R204	0	NM
R205	22 1/16W 5%	NM
R206	0	NM
R207	560k 1/16W 5%	NM
R208	560k 1/16W 5%	NM
R209	560k 1/16W 5%	NM
R210	560k 1/16W 5%	NM
R211	470 1/16W 5%	NM
R212	330k 1/16W 5%	NM
R213	22 1/16W 5%	NM
R214	22 1/16W 5%	NM
R215	100k 1/16W 5%	NM
R216	100k 1/16W 5%	NM
R217	100k 1/16W 5%	NM
R218	NM	0
PB201	22	NM
PB202	22	NM
PB203	22	NM
PB204	22	NM
PB205	100k	NM
PB206	100k	NM
PB207	100k	NM

SDI, AES/EBU input/output board (Option: DSBK-1801)

SDI-62 (2/7)

SDI, AES/EBU output board (Option: DSBK-1601)

SDI-62A (2/7)

BOARD NO. 1-679-107-12
LOT NO. 064-
DSBK-1801_SDI-62_012_2

SDI-62/62A (3/7)

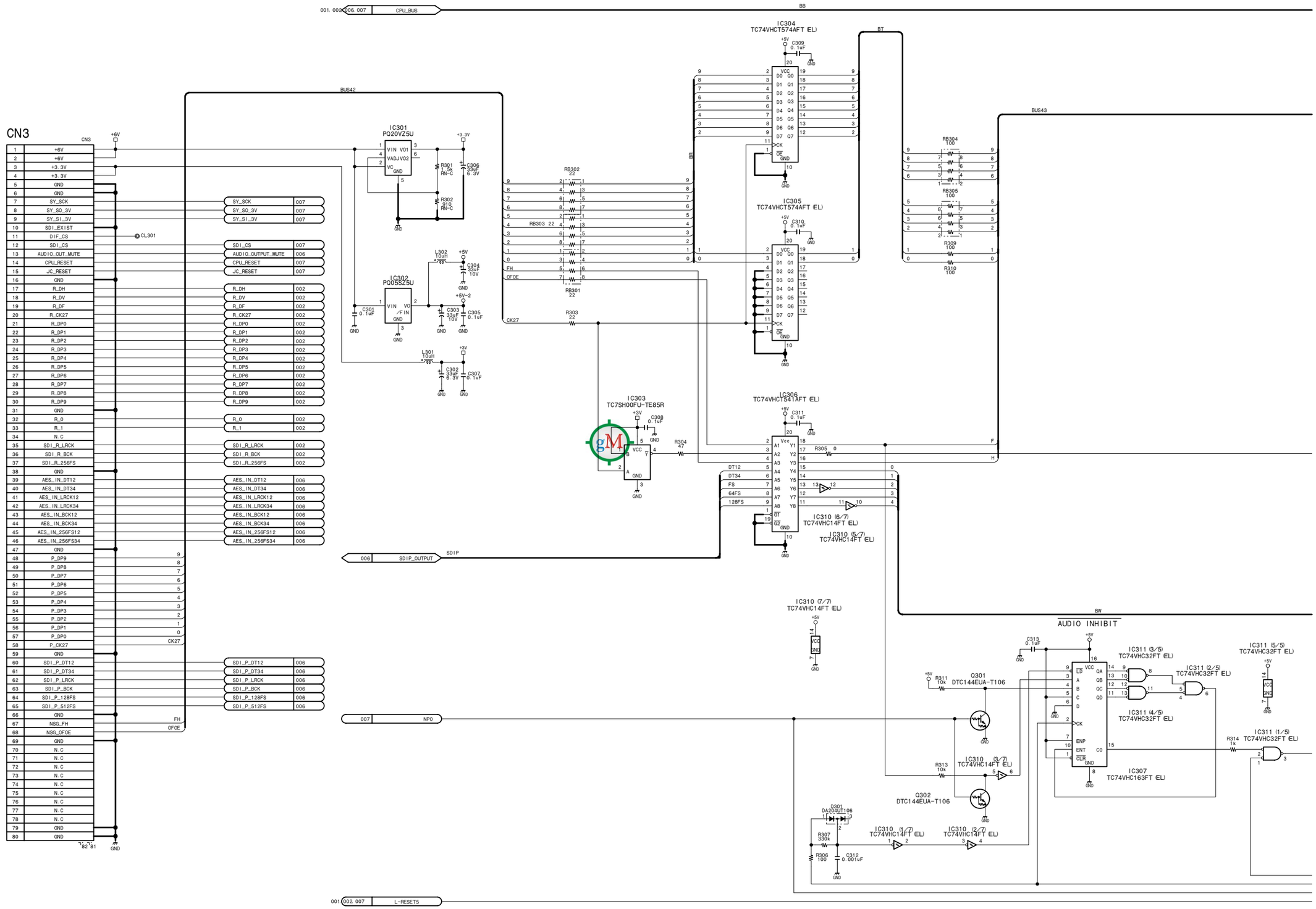

15-114 15-114

DSR-1800/P/1600/P

SDI-62/62A (3/7)

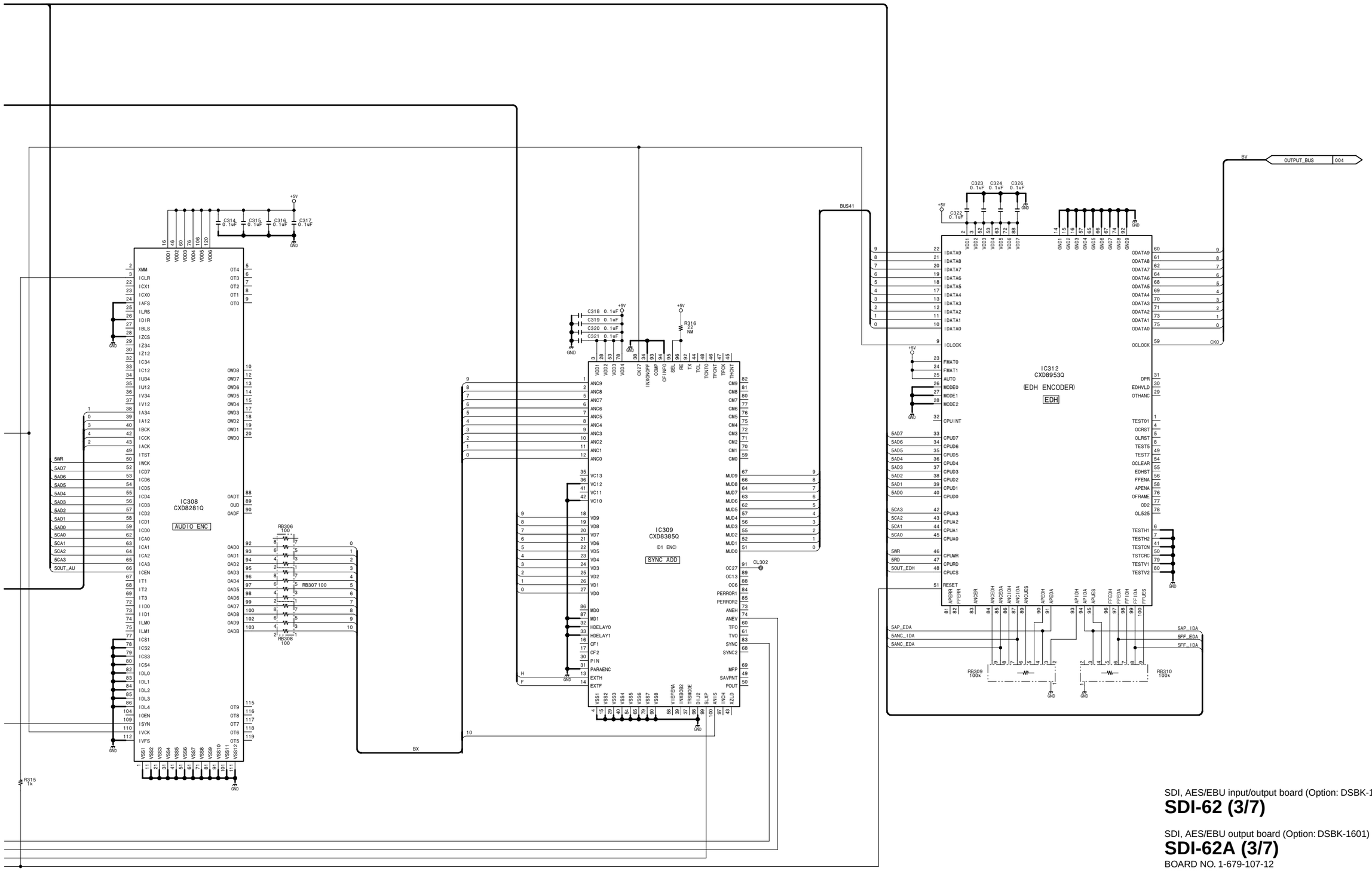

SDI, AES/EBU input/output board (Option: DSBK-1801)

SDI-62 (3/7)

SDI, AES/EBU output board (Option: DSBK-1601)

SDI-62A (3/7)

BOARD NO. 1-679-107-12
LOT NO. 064-
DSBK-1801_SDI-62_012_3

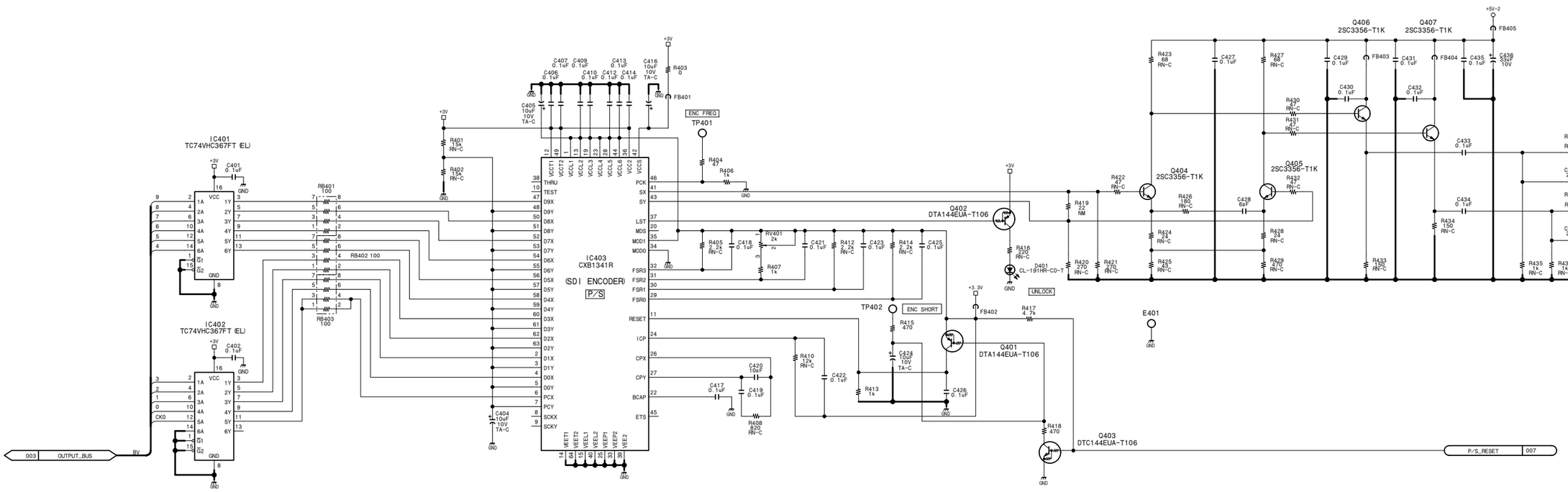

SDI, AES/EBU input/output board (Option: DSBK-1801)

SDI-62 (4/7)

SDI, AES/EBU output board (Option: DSBK-1601)

SDI-62A (4/7)

BOARD NO. 1-679-107-12
LOT NO. 064-
DSBK-1801_SDI-62_012_4

SDI-62/62A (5/7)

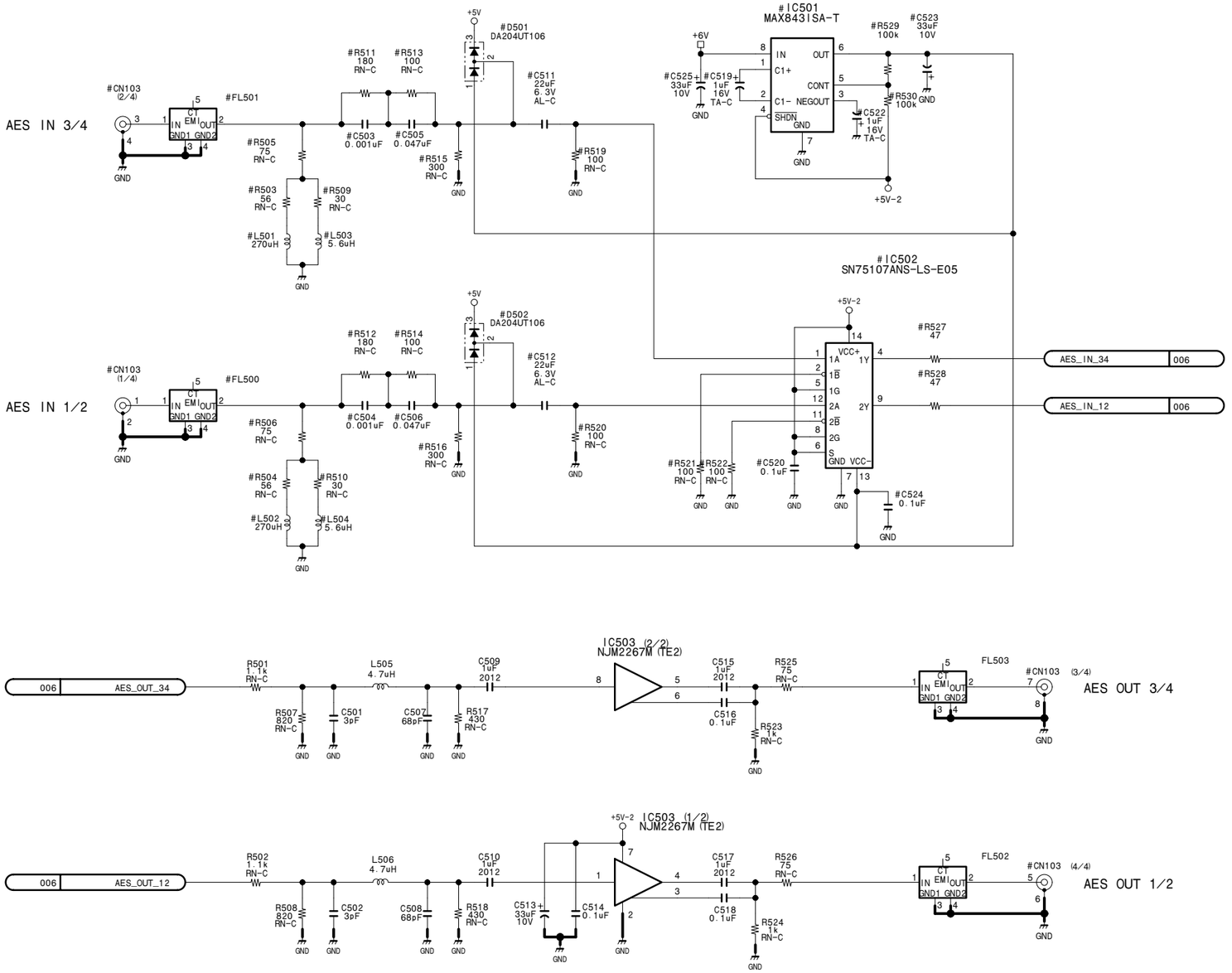

#	REC	PB
C503	0.001uF 25V CH	NM
C504	0.001uF 25V CH	NM
C505	0.047uF 16V B	NM
C506	0.047uF 16V B	NM
C511	22uF 6.3V	NM
C512	22uF 6.3V	NM
C519	1uF 16V 20%	NM
C520	0.1uF 16V B	NM
C522	1uF 16V 20%	NM
C523	33uF 10V	NM
C524	0.1uF 16V B	NM
C525	33uF 10V	NM
CN103	8P 177496611	8P 179487311
D501	DA204UT106	NM
D502	DA204UT106	NM
FL500	123989622	NM
FL501	123989622	NM
IC501	MAX843ISA-	NM
IC502	SN75107ANS	NM
L501	270uH 5%	NM
L502	270uH 5%	NM
L503	5.6uH 5%	NM
L504	5.6uH 5%	NM

#	REC	PB
R503	56 1/16W 0.5%	NM
R504	56 1/16W 0.5%	NM
R505	75 1/16W 0.5%	NM
R506	75 1/16W 0.5%	NM
R509	30 1/16W 0.5%	NM
R510	30 1/16W 0.5%	NM
R511	180 1/16W 0.5%	NM
R512	180 1/16W 0.5%	NM
R513	100 1/16W 0.5%	NM
R514	100 1/16W 0.5%	NM
R515	300 1/16W 0.5%	NM
R516	300 1/16W 0.5%	NM
R519	100 1/16W 0.5%	NM
R520	100 1/16W 0.5%	NM
R521	100 1/16W 0.5%	NM
R522	100 1/16W 0.5%	NM
R527	47 1/16W 5%	NM
R528	47 1/16W 5%	NM
R529	100k 1/16W 5%	NM
R530	100k 1/16W 5%	NM

SDI, AES/EBU input/output board (Option: DSBK-1801)

SDI-62 (5/7)

SDI, AES/EBU output board (Option: DSBK-1601)

SDI-62A (5/7)

BOARD NO. 1-679-107-12
LOT NO. 064-

DSBK-1801_SDI-62_012_5

15-117

SDI-62/62A (6/7)

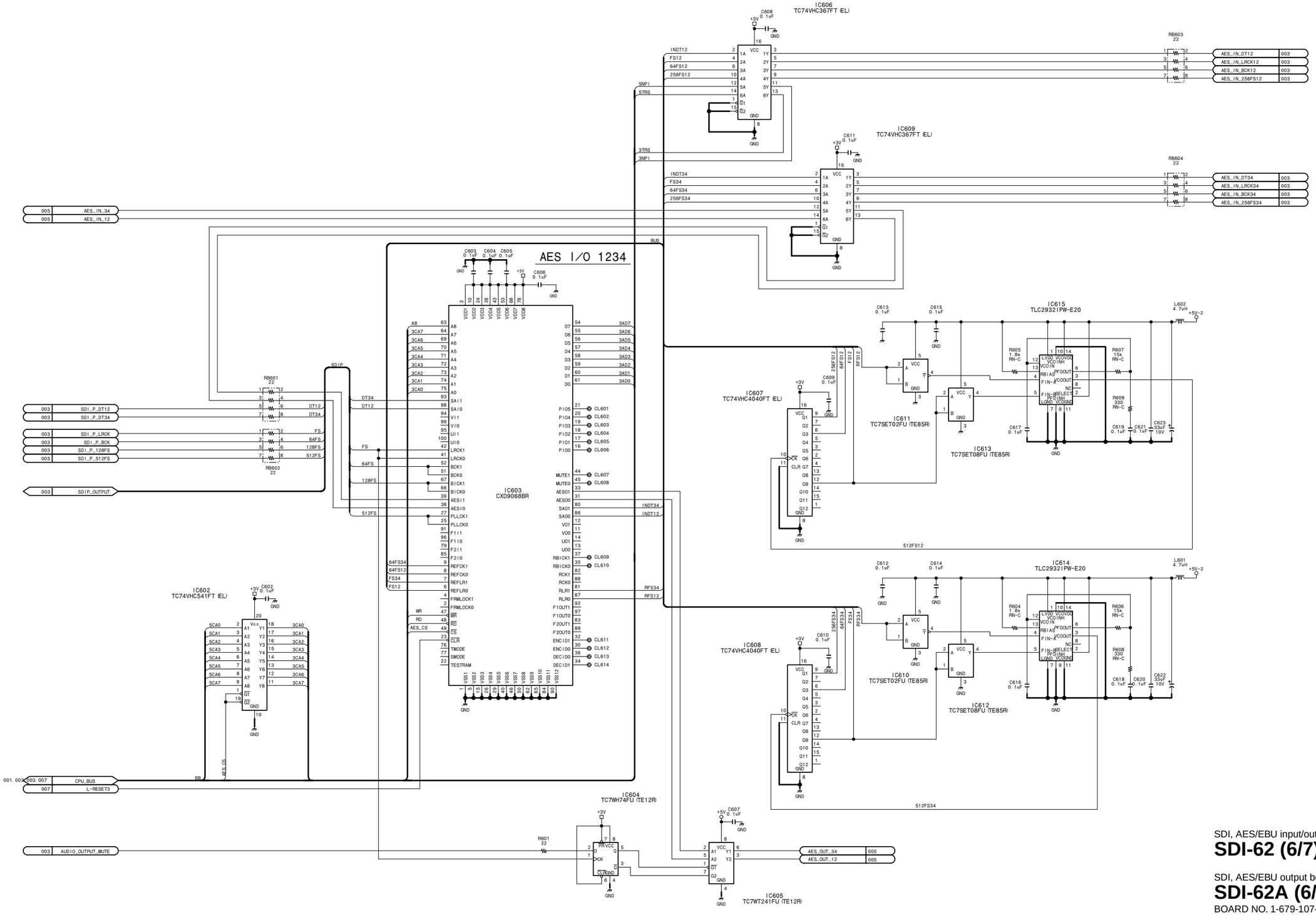

#	REC	PB
C608	0.1uF 16V B	NM
C609	0.1uF 16V B	NM
C610	0.1uF 16V B	NM
C611	0.1uF 16V B	NM
C612	0.1uF 16V B	NM
C613	0.1uF 16V B	NM
C614	0.1uF 16V B	NM
C615	0.1uF 16V B	NM
C616	0.1uF 16V B	NM
C617	0.1uF 16V B	NM
C618	0.1uF 16V B	NM
C619	0.1uF 16V B	NM
C620	0.1uF 16V B	NM
C621	0.1uF 16V B	NM
C622	33uF 10V	NM
C623	33uF 10V	NM
IC606	TC74VHC367	NM
IC607	TC74VHC404	NM
IC608	TC77VHC404	NM
IC609	TC74VHC367	NM
IC610	TC7SET02FU	NM
IC611	TC7SET02FU	NM
IC612	TC7SET08FU	NM
IC613	TC7SET08FU	NM
IC614	TLC2932IPW	NM
IC615	TLC2932IPW	NM
L601	4.7uH 5%	NM
L602	4.7uH 5%	NM
R604	1.8k 1/16W 0.5%	NM
R605	1.8k 1/16W 0.5%	NM
R606	15k 1/16W 0.5%	NM
R607	15k 1/16W 0.5%	NM
R608	330 1/16W 0.5%	NM
R609	330 1/16W 0.5%	NM
RB603	22	NM
RB604	22	NM

SDI, AES/EBU input/output board (Option: DSBK-1801)

SDI-62 (6/7)

SDI, AES/EBU output board (Option: DSBK-1601)

SDI-62A (6/7)

BOARD NO. 1-679-107-12
LOT NO. 064-
DSBK-1801_SDI-62_012_6

http://getMANUAL.com

SDI-62/62A (7/7)

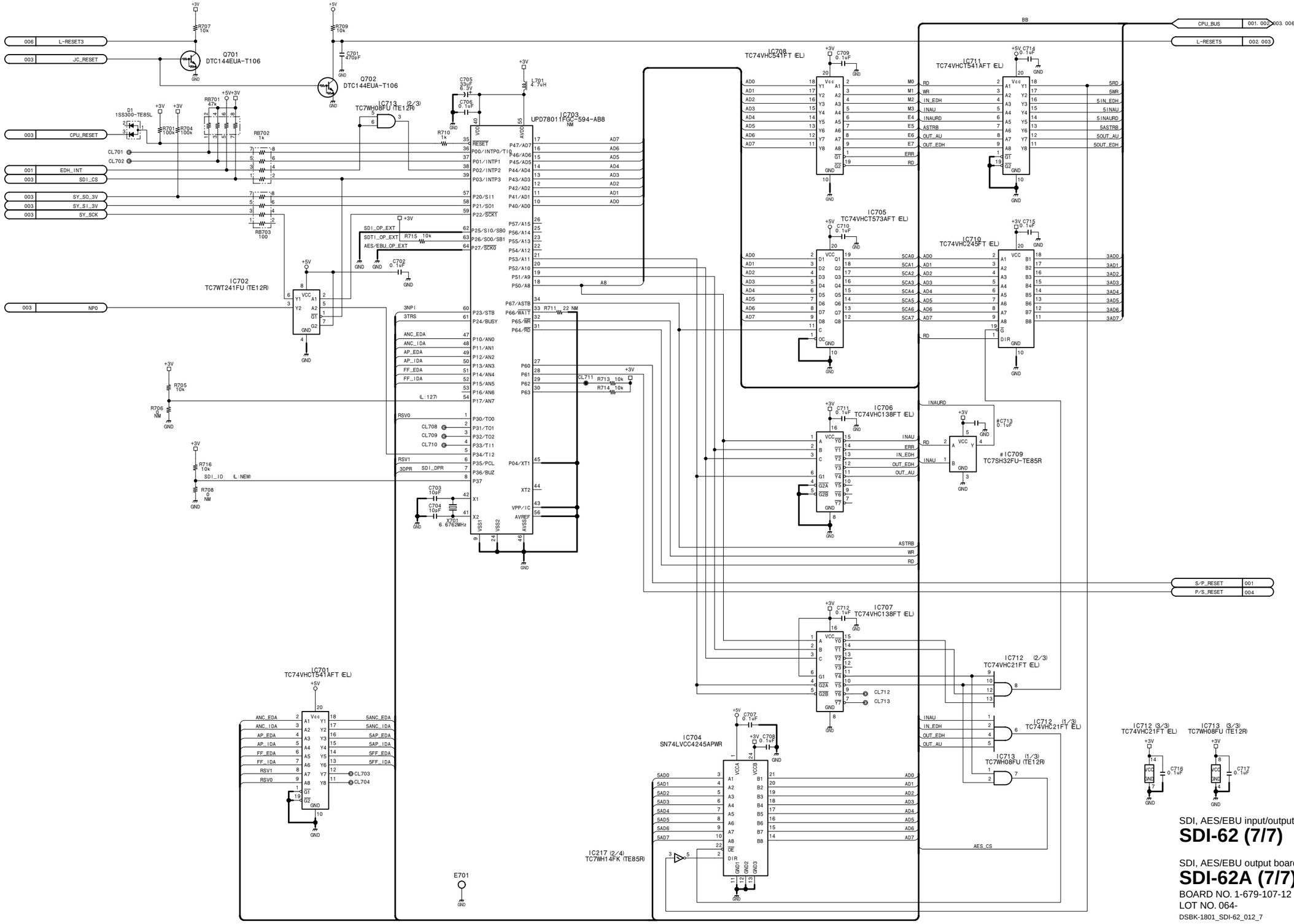

#	REC	PB
C713	0.1uF 16V B	NM
IC709	TC7SH32FU-	NM

SDI, AES/EBU input/output board (Option: DSBK-1801)

SDI-62 (7/7)

SDI, AES/EBU output board (Option: DSBK-1601)

SDI-62A (7/7)

BOARD NO. 1-679-107-12
LOT NO. 064-
DSBK-1801_SDI-62_012_7

SE-521, SE-522, SE-525, SE-538

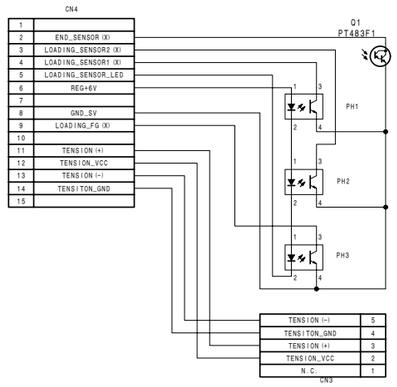

Mode sensor/tape end sensor/loading motor FG sensor

SE-521

BOARD NO. 1-673-532-11
LOT NO. 064-
DSR-2000_SE-521_C11_1

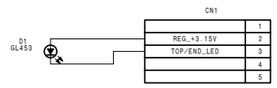

LED signal board

SE-525

BOARD NO. 1-675-522-11
LOT NO. 064-
DSR-2000_SE-525_C11_1

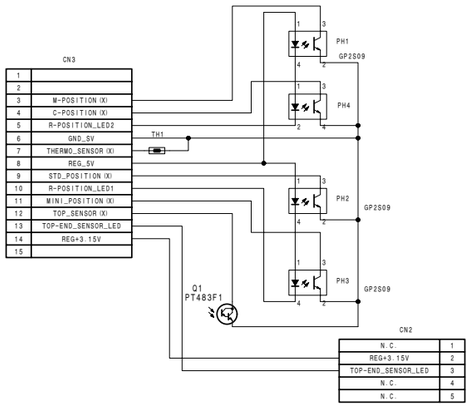

Tape top sensor/reel position sensor (Mini/M/Standard)

SE-522

BOARD NO. 1-675-546-11
LOT NO. 064-
DSR-2000_SE-522_C11_1

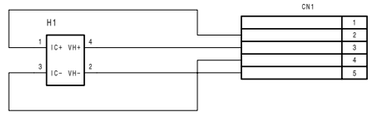

Tension sensor

SE-538

BOARD NO. 1-675-527-11
LOT NO. 064-
DSR-2000_SE-538_C11_1

SSP-23 (1/16)

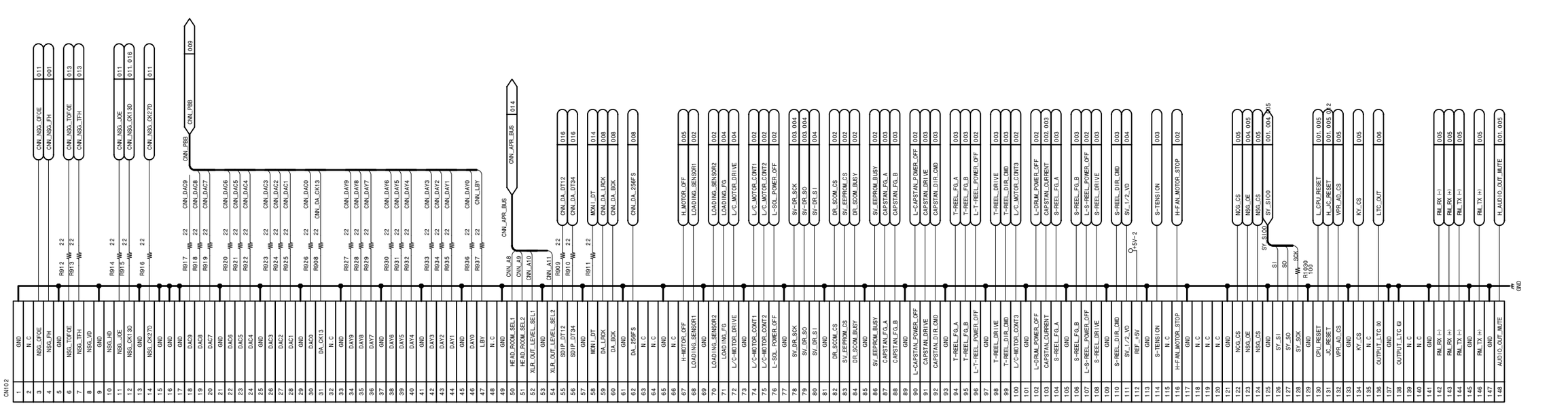

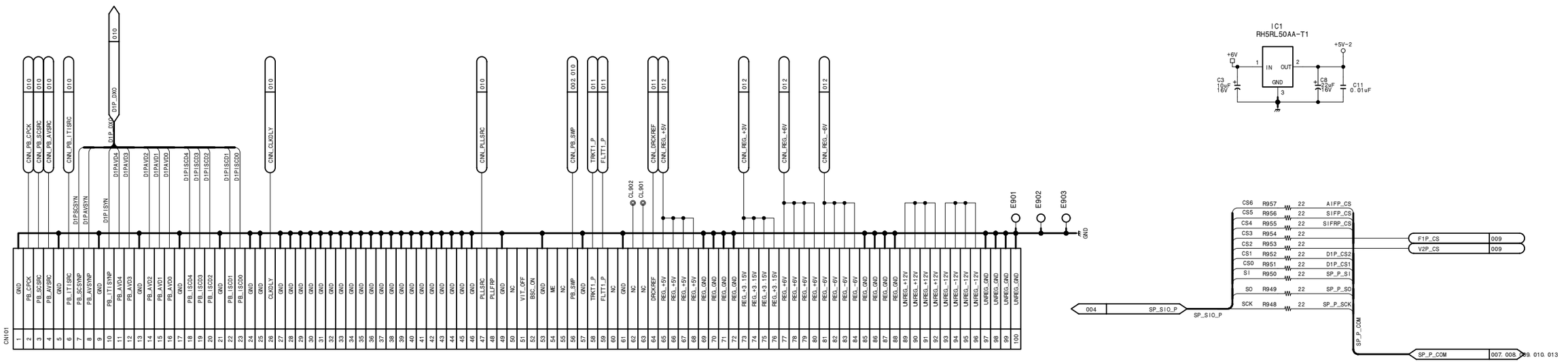

15-122

i.LINK

CN1001

1	+6V		
2	+6V	+6V	001, 012
3	+3.3V	+3V	001, 012
4	+3.3V		
5	GND		
6	GND		
7	JC_RESET	H_JC_RESET	001, 005, 012
8	PLD_RESET	PLD_RESET	005, 012
9	CPU_RESET	L_CPU_RESET	001, 005
10	DV_EXIST	L_DV_EXIST	006
11	SY_SCK	SCK	
12	SY_SO_3V	SYSO	
13	SY_SI_3V	SYSI	
14	DV_CS	SY_SIO0	001, 004, 005
15	SP_R_SCK	DV_CS	005
16	SP_R_SI		
17	SP_R_SO		
18	AIFI_CS		
19	GND		
20	FLTE		
21	RDT0		
22	RDT1		
23	RDT2		
24	RDT3		
25	RDT4		
26	RDT5		
27	RDT6		
28	RDT7		
29	RDT8		
30	RDT9		
31	RDT10		
32	RDT11		
33	RDT12		
34	RDT13		
35	RDT14		
36	RDT15		
37	GND		
38	R_TRCK		
39	R_FLTT		
40	R_TRKT		
41	R_IENPA		
42	R_IENPV		
43	GND		
44	Q_FLTT		
45	Q_TRKT		
46	GND		
47	IDT12		
48	IDT34		
49	IBCK		
50	ILRCK		
51	I256FS		
52	N.C		
53	GND		
54	Q1_IENPA		
55	PDT0	P1_DT0	R960 22
56	PDT1	P1_DT1	R961 22
57	PDT2	P1_DT2	R962 22
58	PDT3	P1_DT3	R963 22
59	PDT4	P1_DT4	R964 22
60	PDT5	P1_DT5	R965 22
61	PDT6	P1_DT6	R966 22
62	PDT7	P1_DT7	R967 22
63	PDT8	P1_DT8	R968 22
64	PDT9	P1_DT9	R969 22
65	PDT10	P1_DT10	R970 22
66	PDT11	P1_DT11	R971 22
67	PDT12	P1_DT12	R972 22
68	PDT13	P1_DT13	R973 22
69	PDT14	P1_DT14	R974 22
70	PDT15	P1_DT15	R975 22
71	GND		
72	P_TRCK	P_TRCK2	009
73	P_FLTT	I_FLTT	013
74	P_TRKT	P_TRKT	R938 22
75	P_IENPA	PIENPA	D1P_CTRL
76	P_IENPV	PIENPV	D1P_CTRL
77	GND		007, 008, 009, 010, 011, 012, 013, 015
78	N.C		CL904
79	N.C		CL905 GND
80	N.C		CL906

P_AIF_IN → P_AIF_IN 007, 008

SYCOM → SYCOM 001, 005, 011

SDTI

CN1002

1	+6V	+6V	001, 012
2	+6V		
3	+3.3V	+3V	001, 012
4	+3.3V		
5	GND		
6	GND		
7	JC_RESET	H_JC_RESET	001, 005, 012
8	SY_SCK	SCK	R976 22
9	SY_SO_3V	SYSO	R977 22
10	SY_SI_3V	SYSI	R978 22
11	DIF_CS	DIF_CS	R979 22
12	SDTI_EXIST	L_SDTI_EXIST	006
13	Q1_IENPA		
14	SP_R_SCK		
15	SP_R_SO_3V		
16	SP_R_SI_3V		
17	AIFI_CS		
18	GND		
19	Q_RDT0		
20	Q_RDT1		
21	Q_RDT2		
22	Q_RDT3		
23	Q_RDT4		
24	Q_RDT5		
25	Q_RDT6		
26	Q_RDT7		
27	Q_RDT8		
28	Q_RDT9		
29	Q_RDT10		
30	Q_RDT11		
31	Q_RDT12		
32	Q_RDT13		
33	Q_RDT14		
34	Q_RDT15		
35	GND		
36	Q_TRCK		
37	Q_FLTT		
38	Q_TRKT		
39	Q_DT12		
40	Q_DT34		
41	Q_LRCK		
42	Q_BCK		
43	Q_256FS		
44	GND		
45	R_QSDT0	CNN_PB_SDTI0	
46	R_QSDT1	CNN_PB_SDTI1	
47	R_QSDT2	CNN_PB_SDTI2	
48	R_QSDT3	CNN_PB_SDTI3	
49	R_QSDT4	CNN_PB_SDTI4	CNN_PB_SDTI
50	R_QSDT5	CNN_PB_SDTI5	
51	R_QSDT6	CNN_PB_SDTI6	
52	R_QSDT7	CNN_PB_SDTI7	
53	R_QSCK27		
54	SYSV		
55	SYSF		
56	SYSH		
57	PCERD		
58	GND		
59	P_QSDT0		
60	P_QSDT1		
61	P_QSDT2		
62	P_QSDT3		
63	P_QSDT4		
64	P_QSDT5		
65	P_QSDT6		
66	P_QSDT7		
67	PCK27	CNN_PCK27	011
68	REFF	REFF	013
69	REFH	REFH	013
70	GND		
71	N.C		CL907
72	N.C		CL908
73	N.C		CL909
74	N.C		CL910
75	N.C	L_CPU_RESET	001, 005
76	N.C		
77	N.C		
78	N.C		
79	GND		
80	GND		

SY_SIO0 → SY_SIO0 001, 004, 005

SYCOM → SYCOM 001, 005, 011

CNN_PB_SDTI → CNN_PB_SDTI 013

SDI_AES/EBU

CN1003

1	+6V	+6V	001, 012
2	+6V		
3	+3.3V	+3V	001, 012
4	+3.3V		
5	GND	SY_SIO0	001, 004, 005
6	GND		
7	SY_SCK	SCK	R1004 22
8	SY_SO_3V	SYSO	R1005 22
9	SY_SI_3V	SYSI	R1006 22
10	SDI_EXIST	L_SDI_EXIST	R1007 22
11	DIF_CS		R1008 22 CL918
12	SDI_CS	SDI_CS	R1009 22
13	AUDIO_OUTPUT_MUTE	H_AUDIO_OUT_MUTE	R1010 22
14	CPU_RESET	L_CPU_RESET	R1011 22
15	JC_RESET	H_JC_RESET	R1012 22
16	GND		
17	R_DH		
18	R_DV		
19	R_DF		
20	R_CK27		
21	R_DP0		
22	R_DP1		
23	R_DP2		
24	R_DP3		
25	R_DP4		
26	R_DP5		
27	R_DP6		
28	R_DP7		
29	R_DP8		
30	R_DP9		
31	GND		
32	R_0		
33	R_1		
34	N.C		
35	SDI_R_LRCK		
36	SDI_R_BCK		
37	SDI_R_256FS		
38	GND		
39	AES_IN_DT12		
40	AES_IN_DT34		
41	AES_IN_LRCK12		
42	AES_IN_LRCK34		
43	ARE_IN_BCK12		
44	ARE_IN_BCK_34		
45	AES_IN_256FS12		
46	AES_IN_256FS34		
47	GND		
48	P_DP9	CNN_SDIP_DT9	
49	P_DP8	CNN_SDIP_DT8	
50	P_DP7	CNN_SDIP_DT7	
51	P_DP6	CNN_SDIP_DT6	
52	P_DP5	CNN_SDIP_DT5	
53	P_DP4	CNN_SDIP_DT4	CNN_SDIP
54	P_DP3	CNN_SDIP_DT3	
55	P_DP2	CNN_SDIP_DT2	
56	P_DP1	CNN_SDIP_DT1	
57	P_DP0	CNN_SDIP_DT0	
58	P_CK27	CNN_SDIP_CK27	
59	GND		
60	SDI_P_DT12	SDIP_DT12	R1026 22
61	SDI_P_DT34	SDIP_DT34	R1027 22
62	SDI_P_LRCK	SDIP_LRCK	
63	SDI_P_BCK	SDIP_BCK	
64	SDI_P_128FS	SDIP_128FS	
65	SDI_P_512FS	SDIP_512FS	
66	GND		
67	NSG_FH	CNN_NSG_FH	R1028 22
68	NSG_OFOE	NSG_OFOE	R1029 22
69	GND		
70	N.C		
71	N.C		CL911
72	N.C		CL912
73	N.C		CL913
74	N.C		CL914
75	N.C		
76	N.C		
77	N.C		
78	N.C		
79	N.C		
80	N.C		

CNN_SDIP → CNN_SDIP 009

SDIP_DT12 → SDIP_DT12 014

SDIP_DT34 → SDIP_DT34 014

SDIP_LRCK → SDIP_LRCK 016

SDIP_BCK → SDIP_BCK 016

SDIP_128FS → SDIP_128FS 016

SDIP_512FS → SDIP_512FS 016

CNN_NSG_FH → CNN_NSG_FH 001

NSG_OFOE → NSG_OFOE 011

SYCOM → SYCOM 001, 005, 011

SDI_CS → SDI_CS 005

H_AUDIO_OUT_MUTE → H_AUDIO_OUT_MUTE 001, 005

L_CPU_RESET → L_CPU_RESET 001, 005

H_JC_RESET → H_JC_RESET 001, 005, 012

System/servo/analog audio input・output process

SSP-23 (1/16)

BOARD NO. 1-679-103-11

LOT NO. 064-

DSR-1600_SSP-23_011_1

SSP-23 (2/16)

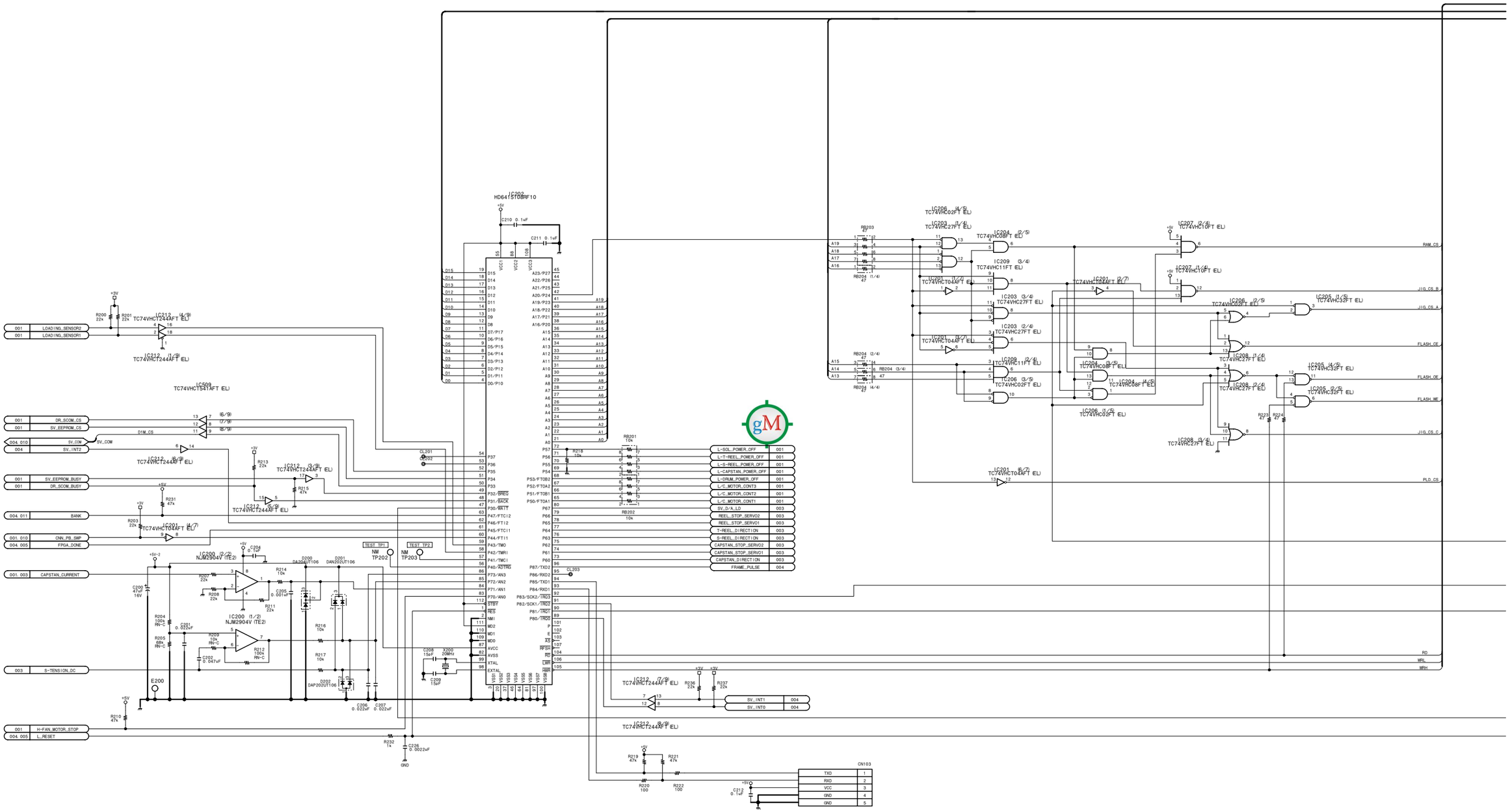

15-124

SSP-23 (2/16)

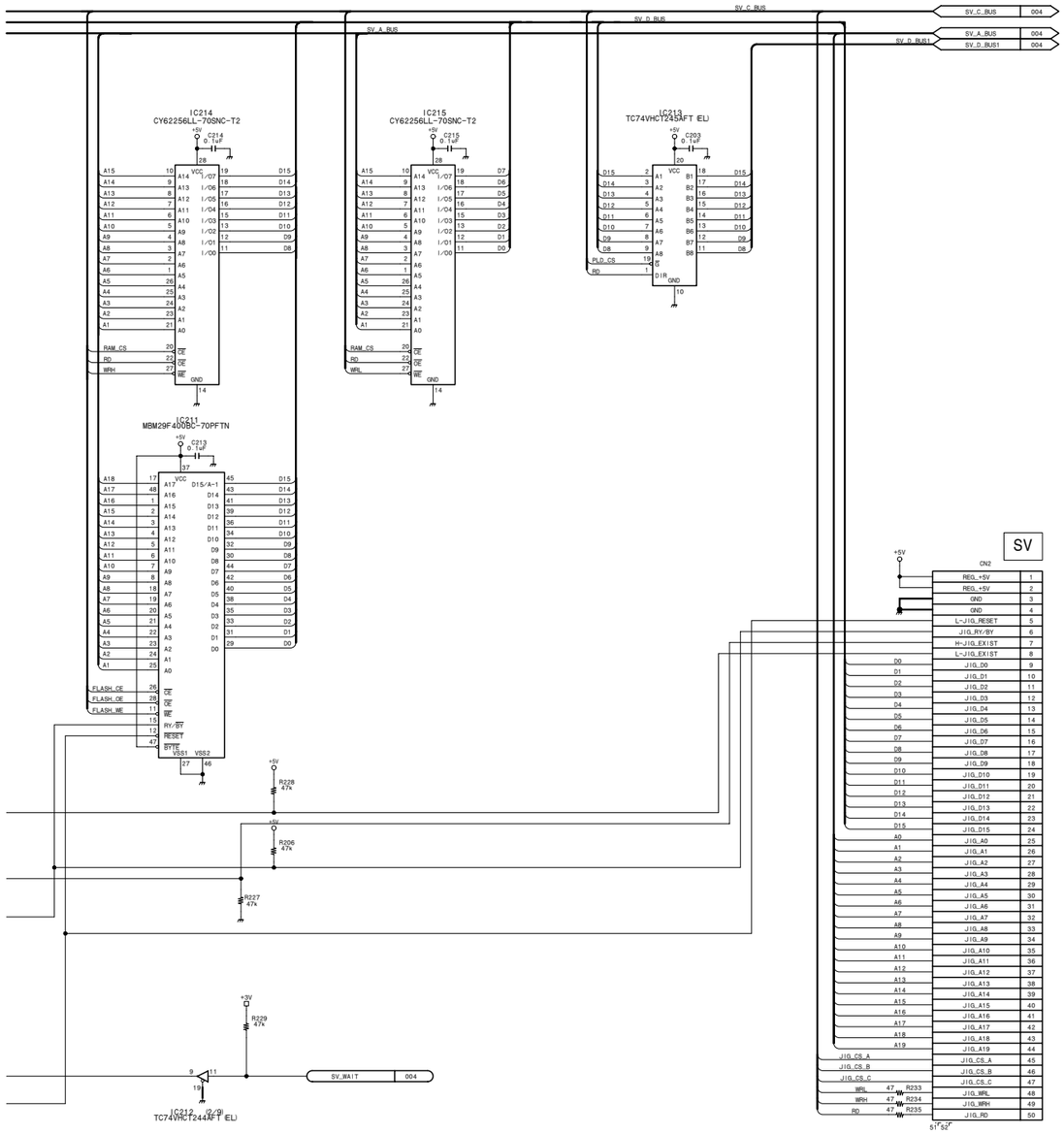

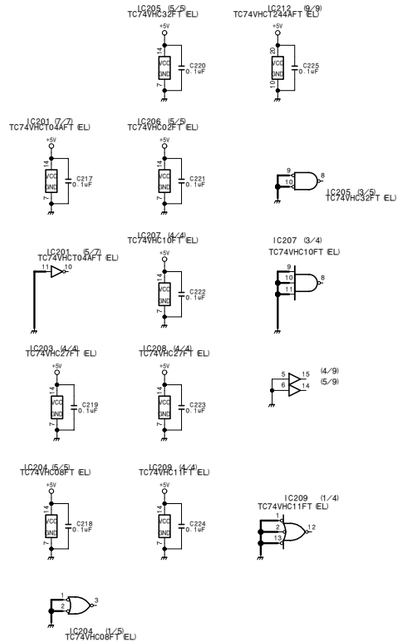

System/servo/analog audio input・output process

SSP-23 (2/16)

BOARD NO. 1-679-103-11
LOT NO. 064-

DSR-1600_SSP-23_011_2

SSP-23 (3/16)

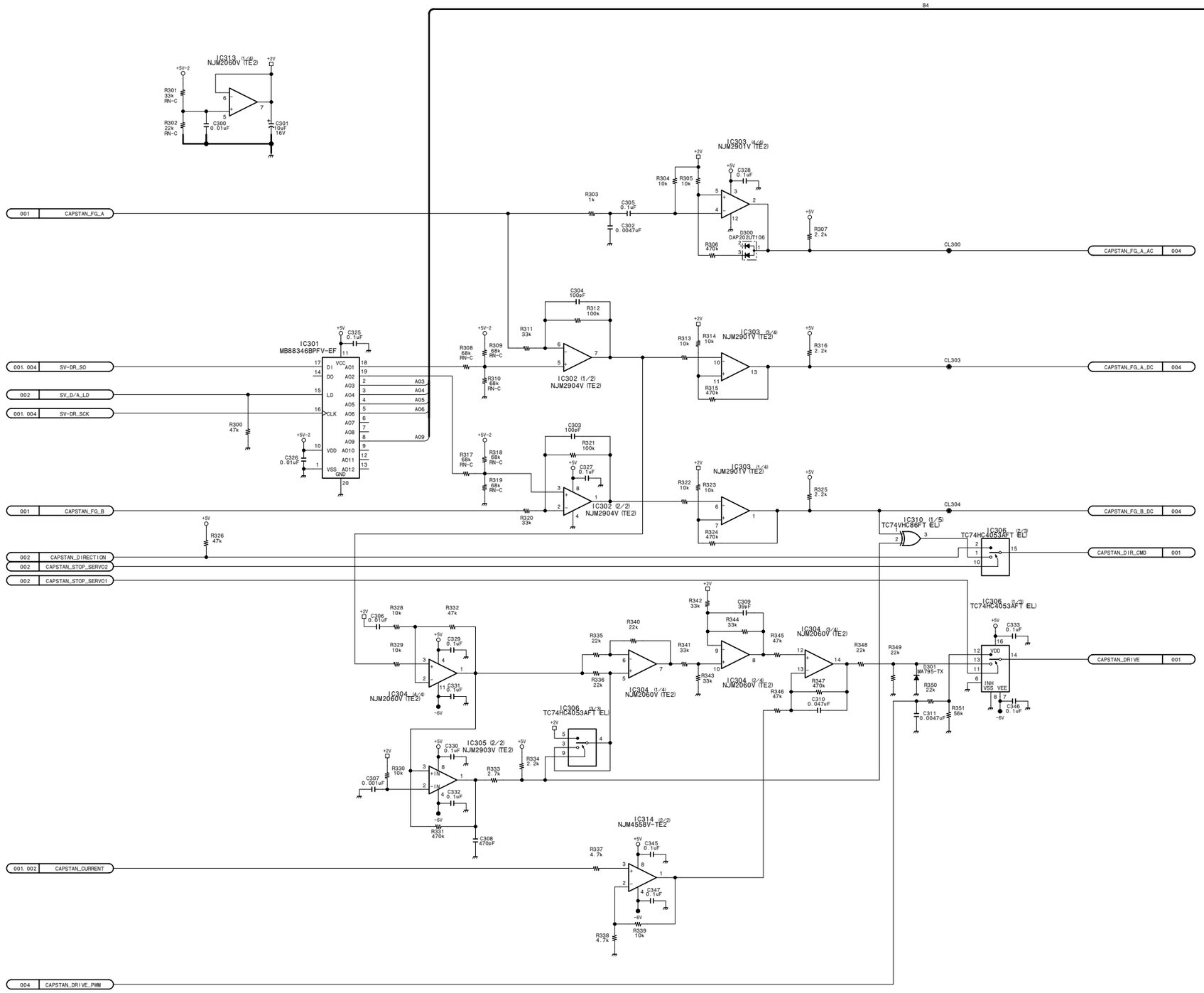

15-126

SSP-23 (3/16)

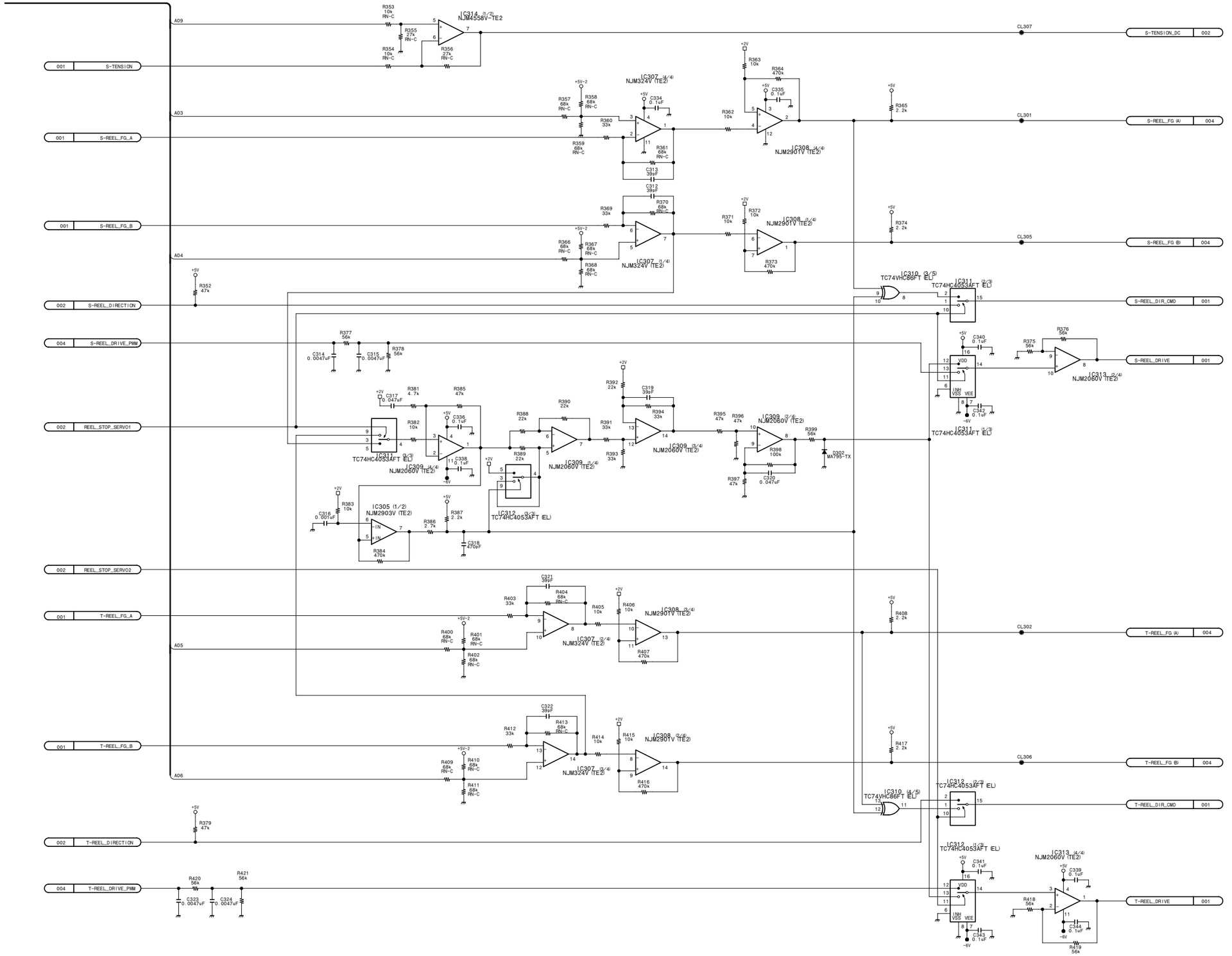

System/servo/analog audio input・output process

SSP-23 (3/16)

BOARD NO. 1-679-103-11
LOT NO. 064-
DSR-1600_SSP-23_011_3

http://getMANUAL.com

System/servo/analog audio input・output process

SSP-23 (4/16)

BOARD NO. 1-679-103-11
LOT NO. 064-
DSR-1600_SSP-23_011_4

SSP-23 (5/16)

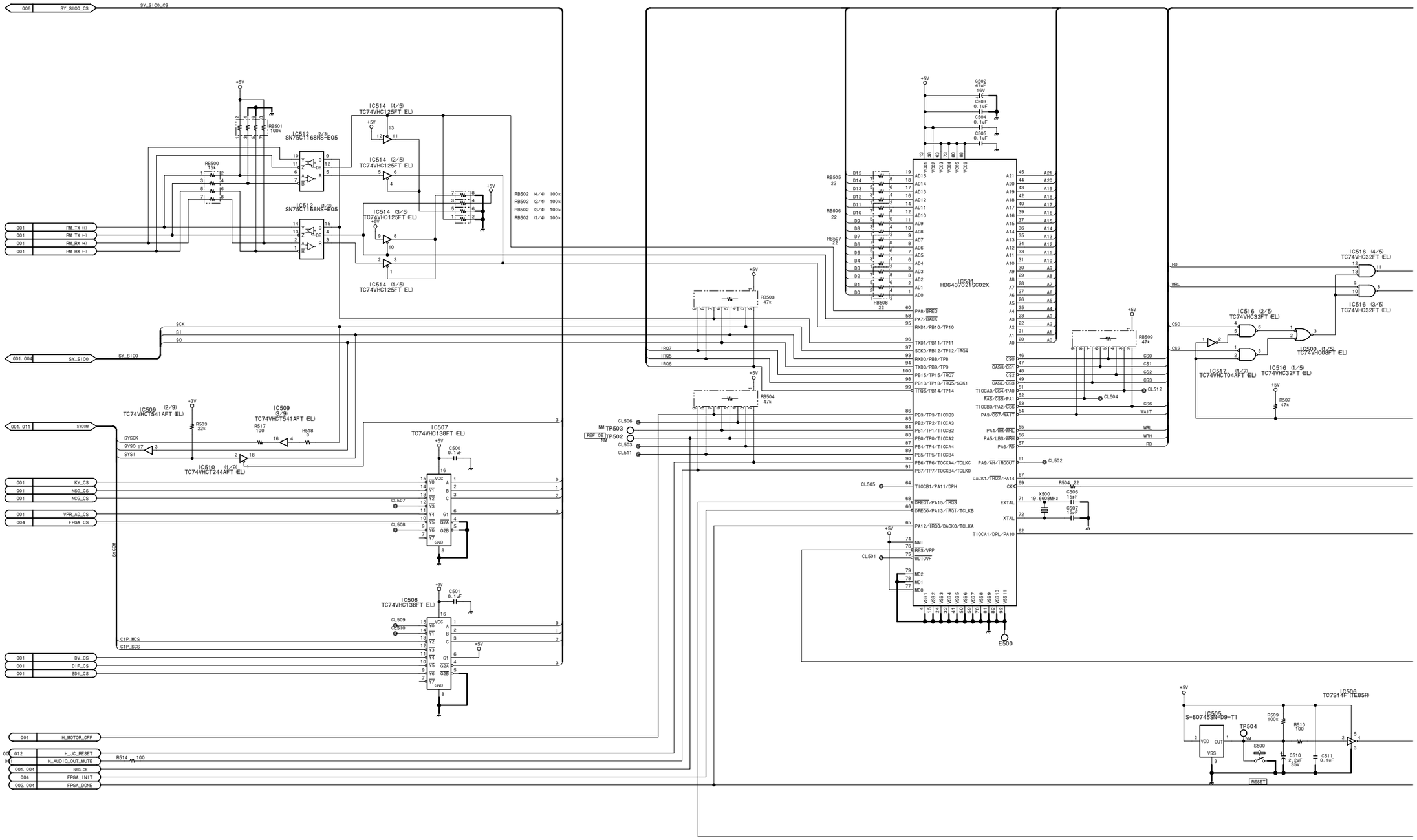

15-130

SSP-23 (5/16)

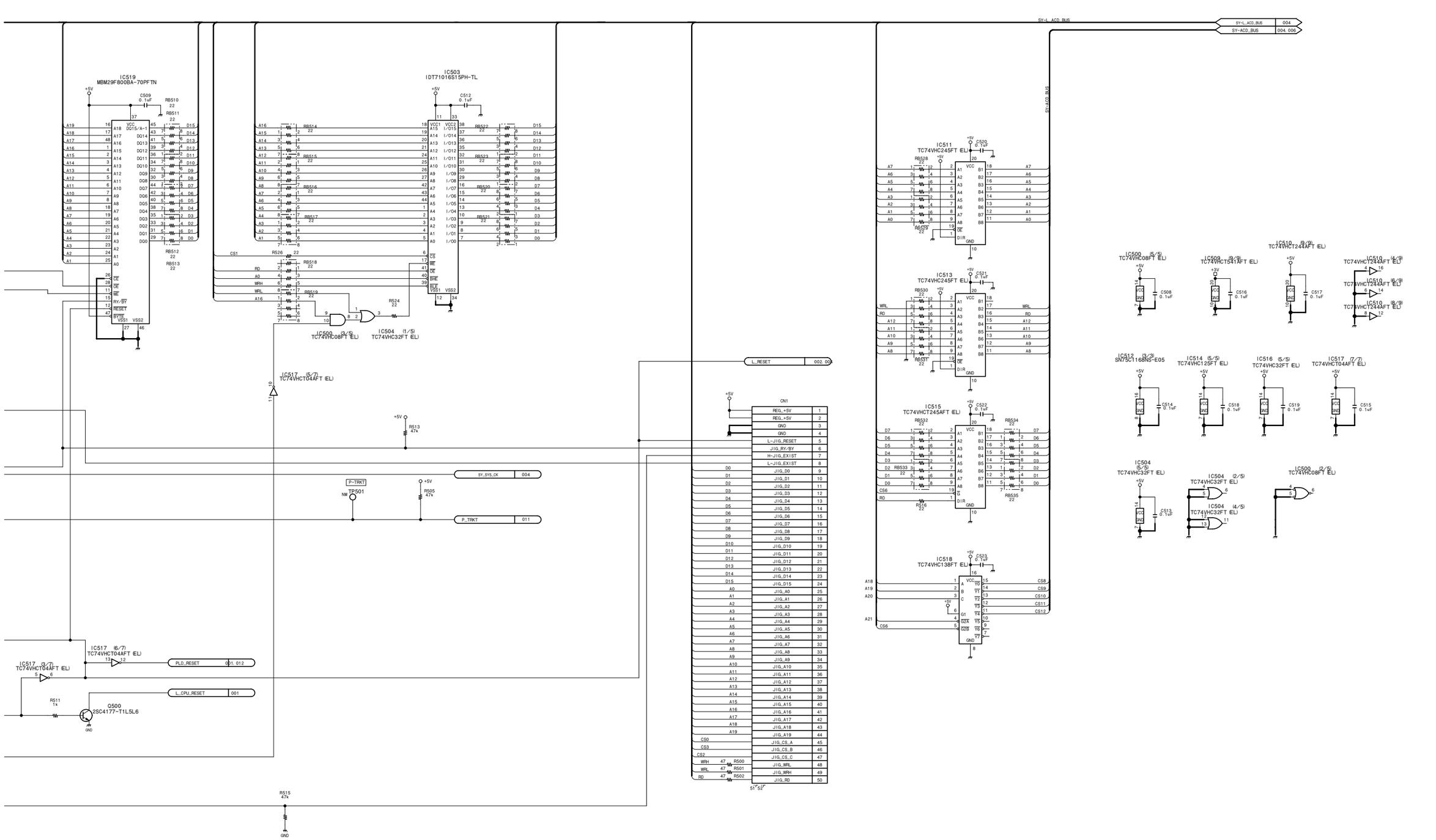

System/servo/analog audio input・output process

SSP-23 (5/16)

BOARD NO. 1-679-103-11
LOT NO. 064-
DSR-1600_SSP-23_011_5

SSP-23 (6/16)

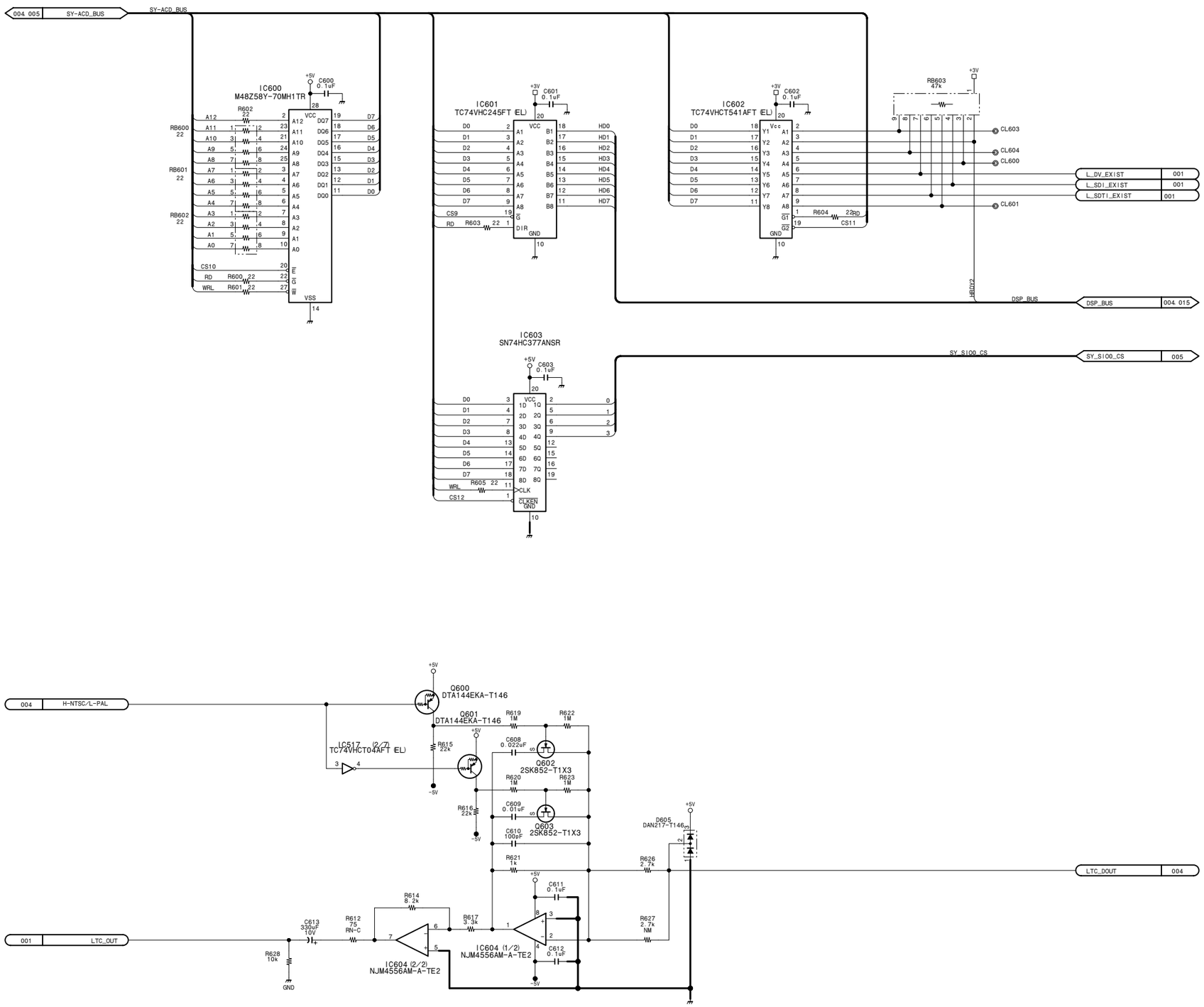

System/servo/analog audio input・output process

SSP-23 (6/16)

BOARD NO. 1-679-103-11
LOT NO. 064-
DSR-1600_SSP-23_011_6

15-132

SSP-23 (7/16)

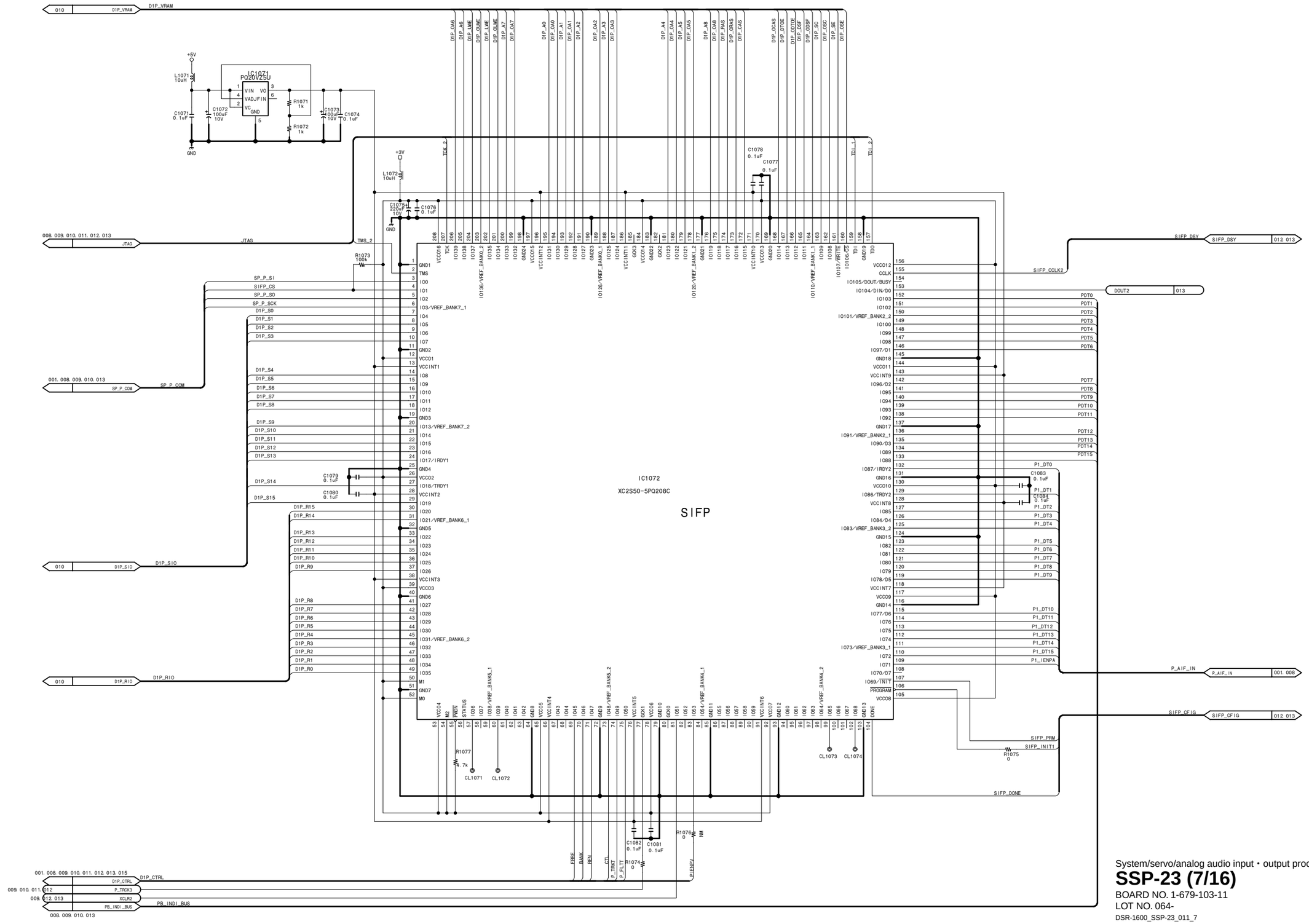

System/servo/analog audio input・output process

SSP-23 (7/16)

BOARD NO. 1-679-103-11
LOT NO. 064-
DSR-1600_SSP-23_011_7

SSP-23 (8/16)

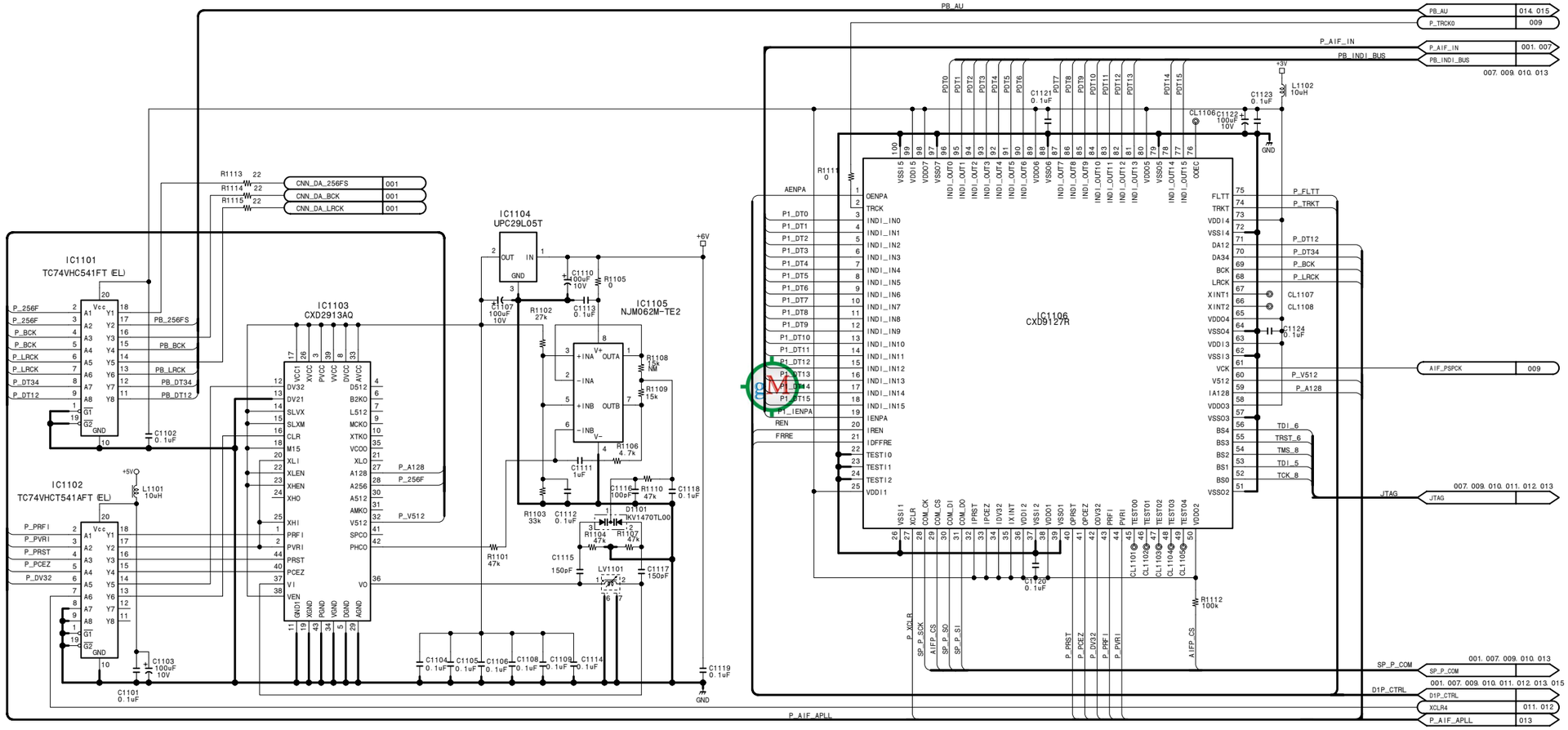

System/servo/analog audio input・output process

SSP-23 (8/16)

BOARD NO. 1-679-103-11
LOT NO. 064-
DSR-1600_SSP-23_011_8

 SSP-23 (9/16)

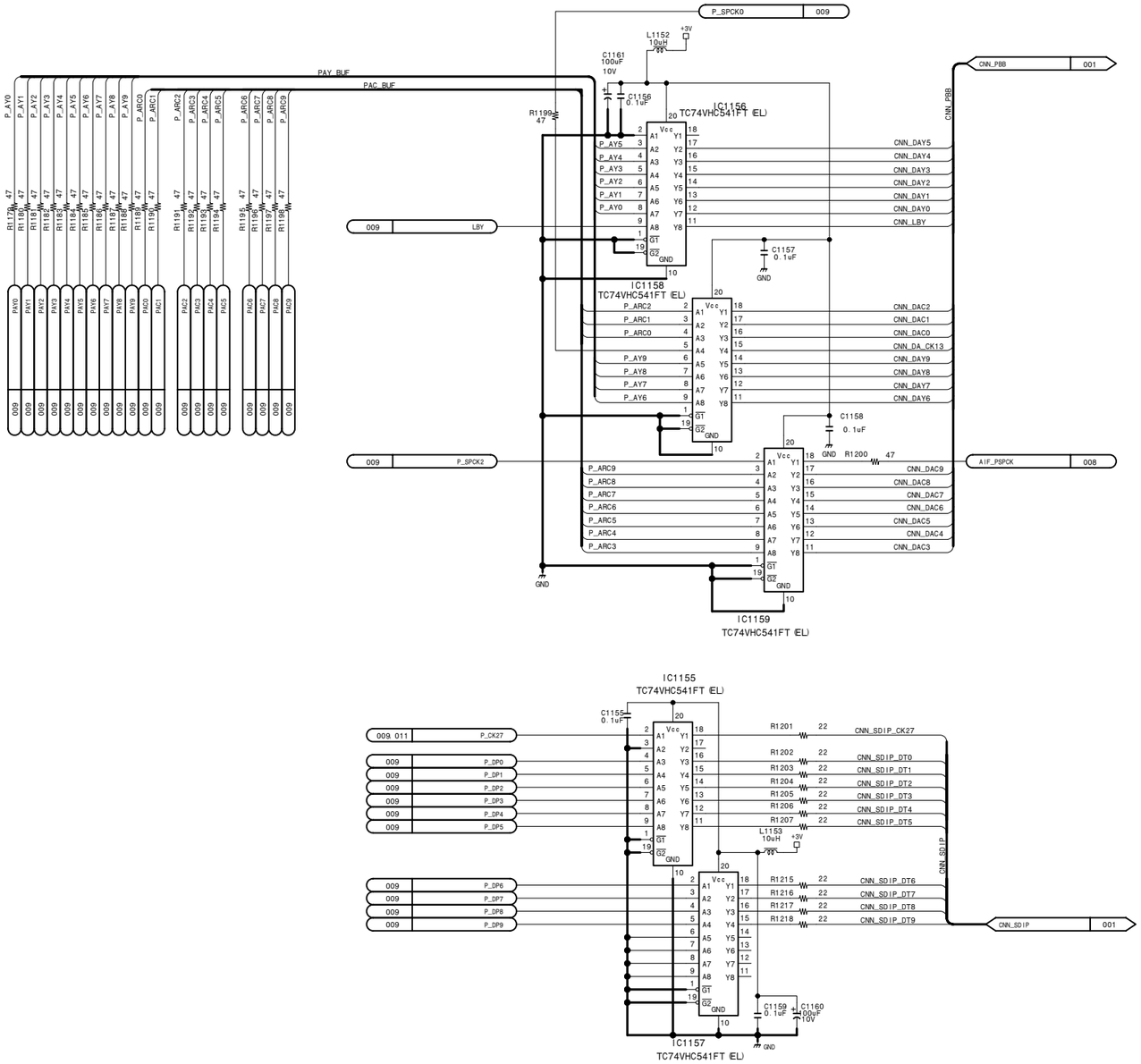

PB_ANA

CN1011

1	GND		
2	GND		
3	AY0	PAY0	009
4	AY1	PAY1	009
5	AY2	PAY2	009
6	AY3	PAY3	009
7	AY4	PAY4	009
8	AY5	PAY5	009
9	AY6	PAY6	009
10	AY7	PAY7	009
11	AY8	PAY8	009
12	AY9	PAY9	009
13	GND		
14	GND		
15	AC0	PAC0	009
16	AC1	PAC1	009
17	AC2	PAC2	009
18	AC3	PAC3	009
19	AC4	PAC4	009
20	AC5	PAC5	009
21	AC6	PAC6	009
22	AC7	PAC7	009
23	AC8	PAC8	009
24	AC9	PAC9	009
25	GND		
26	GND		
27	AHD N.C		
28	ACLK	P_CK13	011
29	AVD N.C		
30	GND		
31	AFD N.C		
32	SPCK2	P_SPCK2	009
33	CLP1 N.C		
34	GND		
35	CLP2 N.C		
36	LBY	LBY	009
37	FOE	C1P_OE	011
38	TMS	JTAG	TMS_4, TDI_3, TDI_4, TCK_4, TRST_4
39	TDI		007. 008. 010. 011. 012. 013
40	TDO		
41	TCK		
42	TRST		
43	F1XCS	F1P_CS	001
44	V2XCS	V2P_CS	001
45	SPSI	SP_P_COM	SP_P_SI, SP_P_SO, SP_P_SCK
46	SPSO		001. 007. 008. 010. 013
47	SPSCK		
48	XCLR	XCLR2	007. 012. 013
49	GND		
50	PLD_RES		
51	CCLK	V2_CCLK0	V2_INIT1
52	XINIT	V2_PRM	V2_DSY 012
53	DIN	V2_DIN0	
54	DOUT		
55	SDISEL N.C		
56	DONE	V2_DONE	
57	ENA N.C		
58	ENB N.C	V2_CFIG	V2_CFIG 012
59	ENC N.C		
60	END N.C		
61	DH N.C		
62	TRCK3	P_TRCK3	007. 010. 011. 012
63	DV N.C		
64	GND		
65	DF N.C		
66	CK27	P_CK27	009. 011
67	GND		
68	GND		
69	DP0	P_DP0	009
70	DP1	P_DP1	009
71	DP2	P_DP2	009
72	DP3	P_DP3	009
73	DP4	P_DP4	009
74	DP5	P_DP5	009
75	DP6	P_DP6	009
76	DP7	P_DP7	009
77	DP8	P_DP8	009
78	DP9	P_DP9	009
79	GND		
80	GND		

GND

PB_I_BUS

CN1012

1	+3V		
2	+3V		
3	+3V		
4	+3V		
5	+3V		
6	+3V		
7	GND		
8	GND		
9	GND		
10	GND		
11	GND		
12	GND		
13	PDT15	PDT15	
14	PDT14	PDT14	
15	PDT13	PDT13	
16	PDT12	PDT12	
17	PDT11	PDT11	
18	PDT10	PDT10	
19	PDT9	PDT9	
20	PDT8	PDT8	
21	GND	PB_INDI_BUS	PB_INDI_BUS
22	GND		007. 008. 010. 013
23	PDT7	PDT7	
24	PDT6	PDT6	
25	PDT5	PDT5	
26	PDT4	PDT4	
27	PDT3	PDT3	
28	PDT2	PDT2	
29	PDT1	PDT1	
30	PDT0	PDT0	
31	GND		
32	GND		
33	DIBUPA	PDIBUPA	
34	DIBUPB	PDIBUPB	PB_T1_CTRL
35	DIBUPC	PDIBUPC	PB_T1_CTRL 013
36	DIBUPD	PDIBUPD	
37	GND		
38	TRKT	P_TRKT	
39	TTRCK	P_TTRCK	011
40	FLTT	P_FLTT	
41	GND		
42	GND	D1P_CTRL	001. 007. 008. 010. 011. 012. 013. 015
43	TRCK0	P_TRCK0	008
44	TRCK1	P_TRCK1	013
45	TRCK2	P_TRCK2	001
46	GND		
47	GND		
48	SPCK0	P_SPCK0	009
49	SPCK1		
50	SPARE0 N.C		
51	GND		
52	GND		
53	EJC0		
54	EJC1		
55	EJC2		
56	EJC3		
57	EJC4		
58	EJC5		
59	EJC6		
60	EJC7		
61	GND		
62	GND		
63	EJY0		
64	EJY1		
65	EJY2		
66	EJY3		
67	EJY4		
68	EJY5		
69	EJY6		
70	EJY7		
71	GND		
72	GND		
73	EJSYY		
74	EJSYC		
75	JIOCY N.C		
76	JIOCC N.C		
77	YOE		
78	COE		
79	SPARE1 N.C		
80	XSGC N.C		

+3V
GND

System/servo/analog audio input・output process

SSP-23 (9/16)

BOARD NO. 1-679-103-11
LOT NO. 064-
DSR-1600_SSP-23_011_9

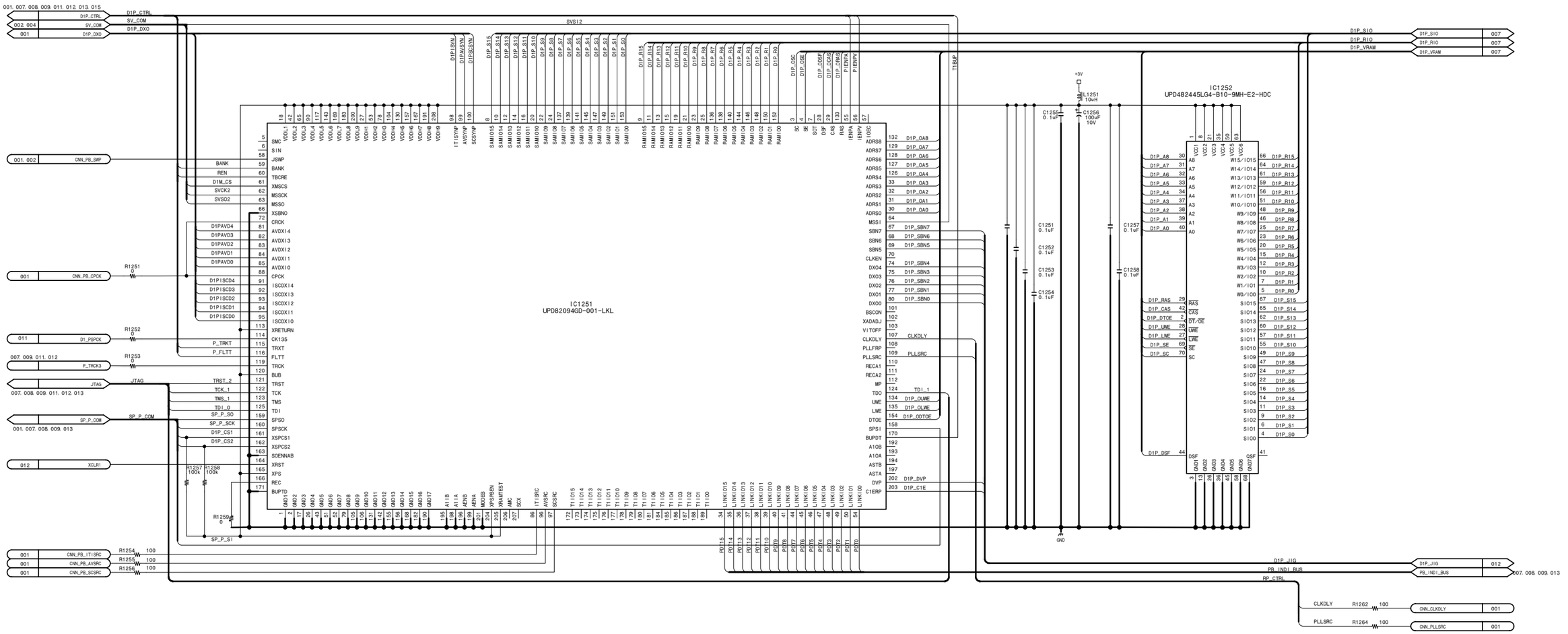

System/servo/analog audio input • output process

SSP-23 (10/16)

BOARD NO. 1-679-103-11
LOT NO. 064-
DSR-1600_SSP-23_011_10

SSP-23 (11/16)

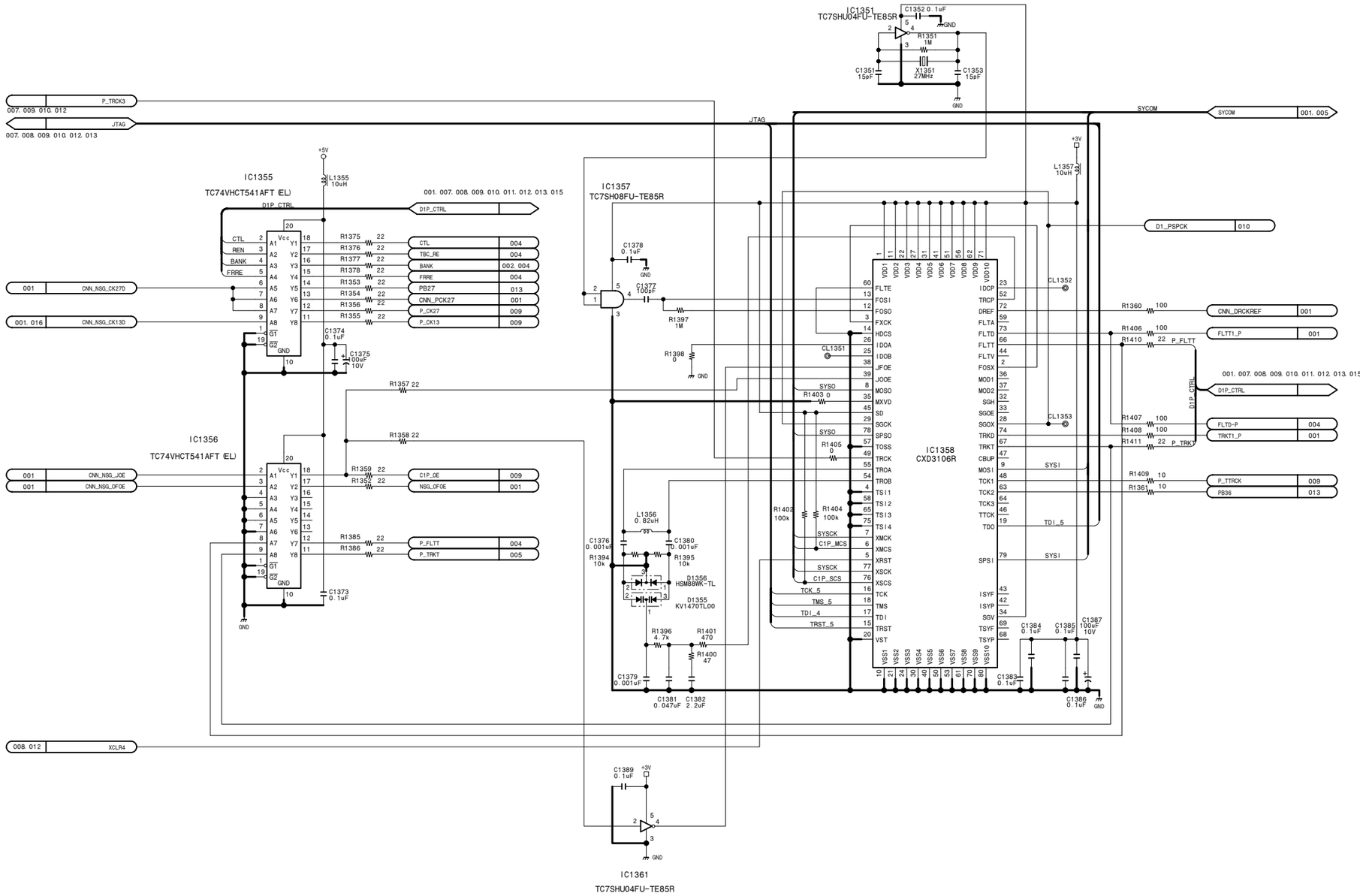

System/servo/analog audio input・output process

SSP-23 (11/16)

BOARD NO. 1-679-103-11
LOT NO. 064-
DSR-1600_SSP-23_011_11

SSP-23 (12/16)

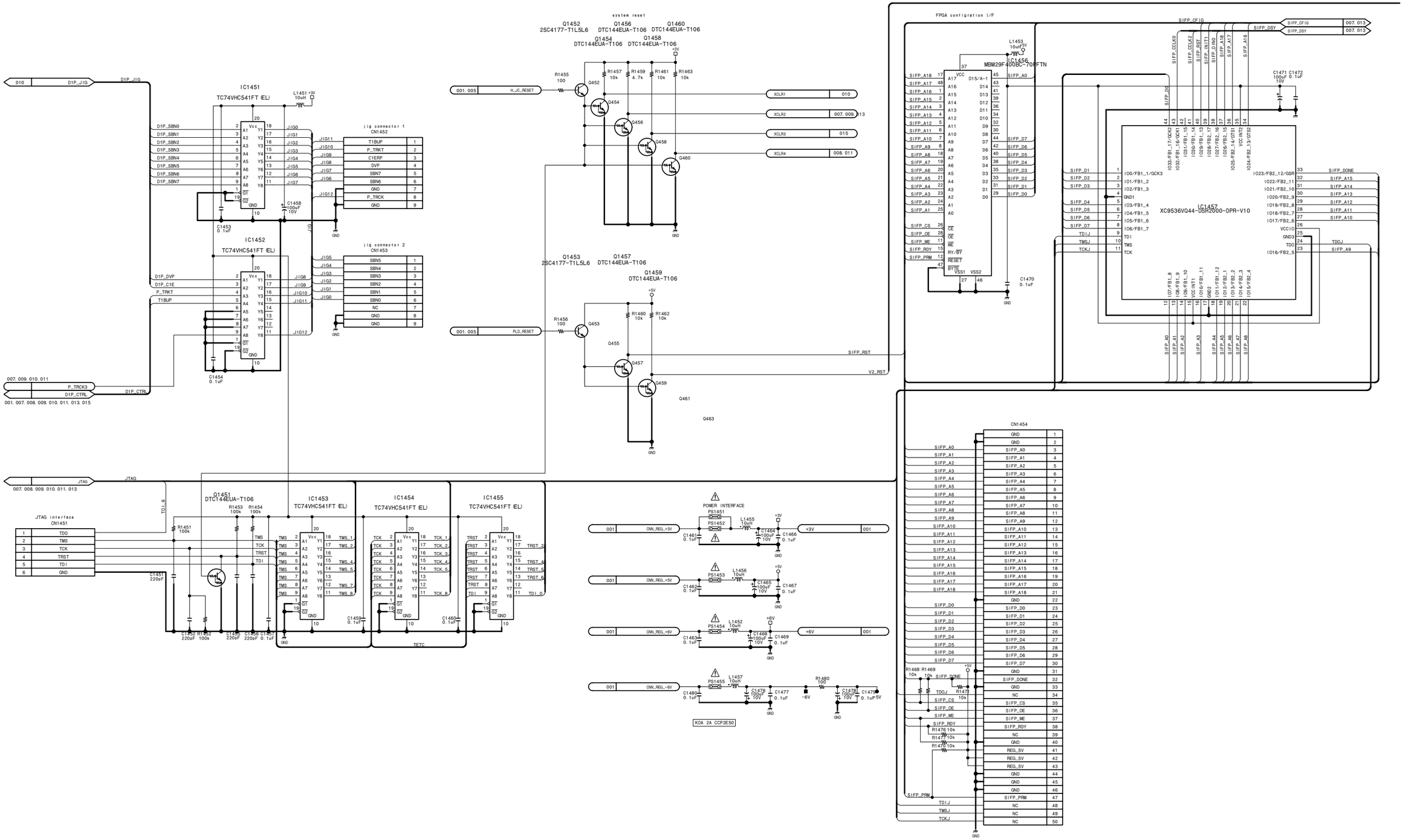

15-138

http://getMANUAL.com

SSP-23 (12/16)

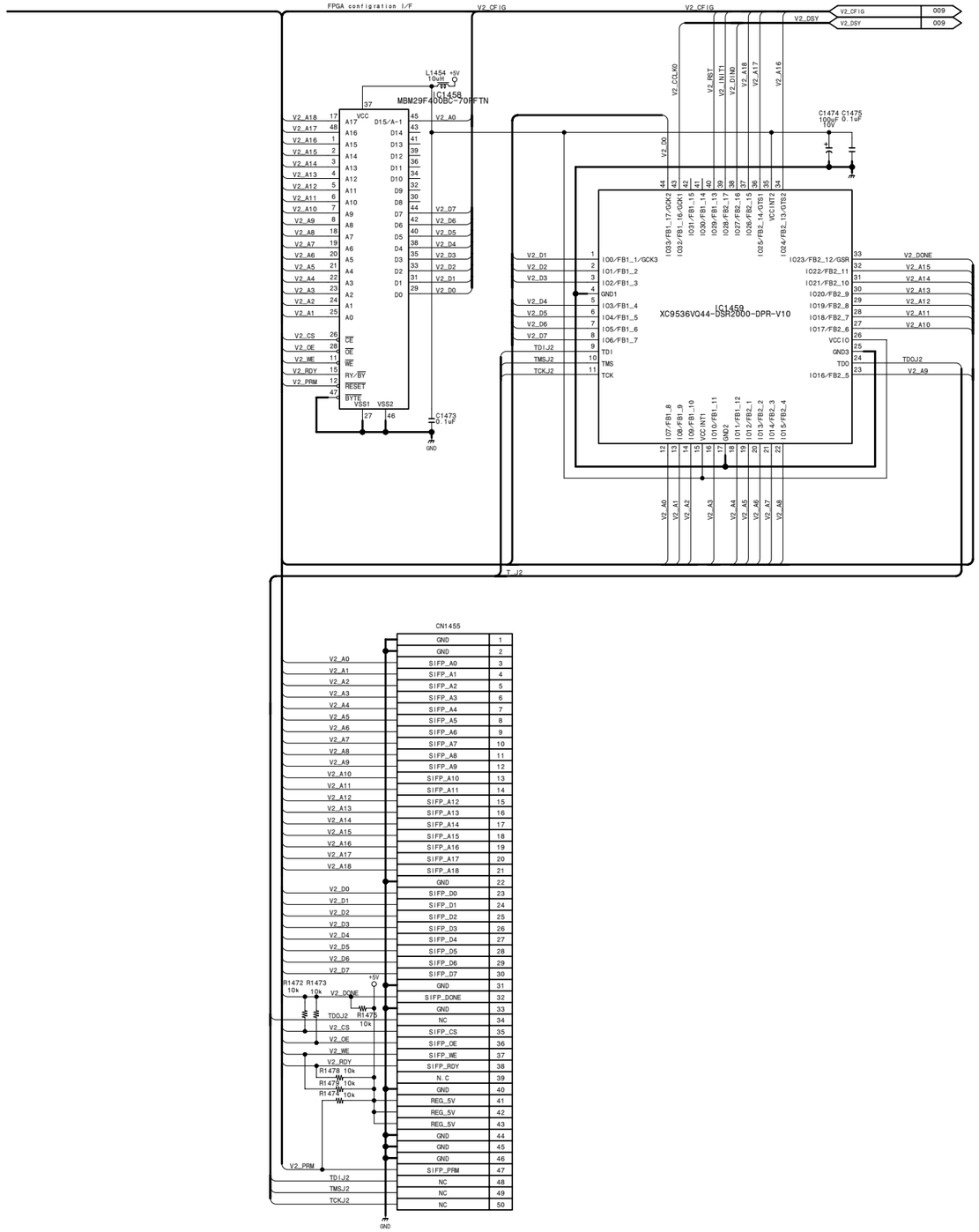

CN1455	
GND	1
GND	2
SIFP_A0	3
SIFP_A1	4
SIFP_A2	5
SIFP_A3	6
SIFP_A4	7
SIFP_A5	8
SIFP_A6	9
SIFP_A7	10
SIFP_A8	11
SIFP_A9	12
SIFP_A10	13
SIFP_A11	14
SIFP_A12	15
SIFP_A13	16
SIFP_A14	17
SIFP_A15	18
SIFP_A16	19
SIFP_A17	20
SIFP_A18	21
GND	22
SIFP_D0	23
SIFP_D1	24
SIFP_D2	25
SIFP_D3	26
SIFP_D4	27
SIFP_D5	28
SIFP_D6	29
SIFP_D7	30
GND	31
SIFP_DONE	32
GND	33
NC	34
SIFP_CS	35
SIFP_OE	36
SIFP_WE	37
SIFP_RDY	38
N.C	39
GND	40
REG_5V	41
REG_5V	42
REG_5V	43
GND	44
GND	45
GND	46
SIFP_PRM	47
NC	48
NC	49
NC	50

System/servo/analog audio input・output process

SSP-23 (12/16)

BOARD NO. 1-679-103-11
LOT NO. 064-
DSR-1600_SSP-23_011_12

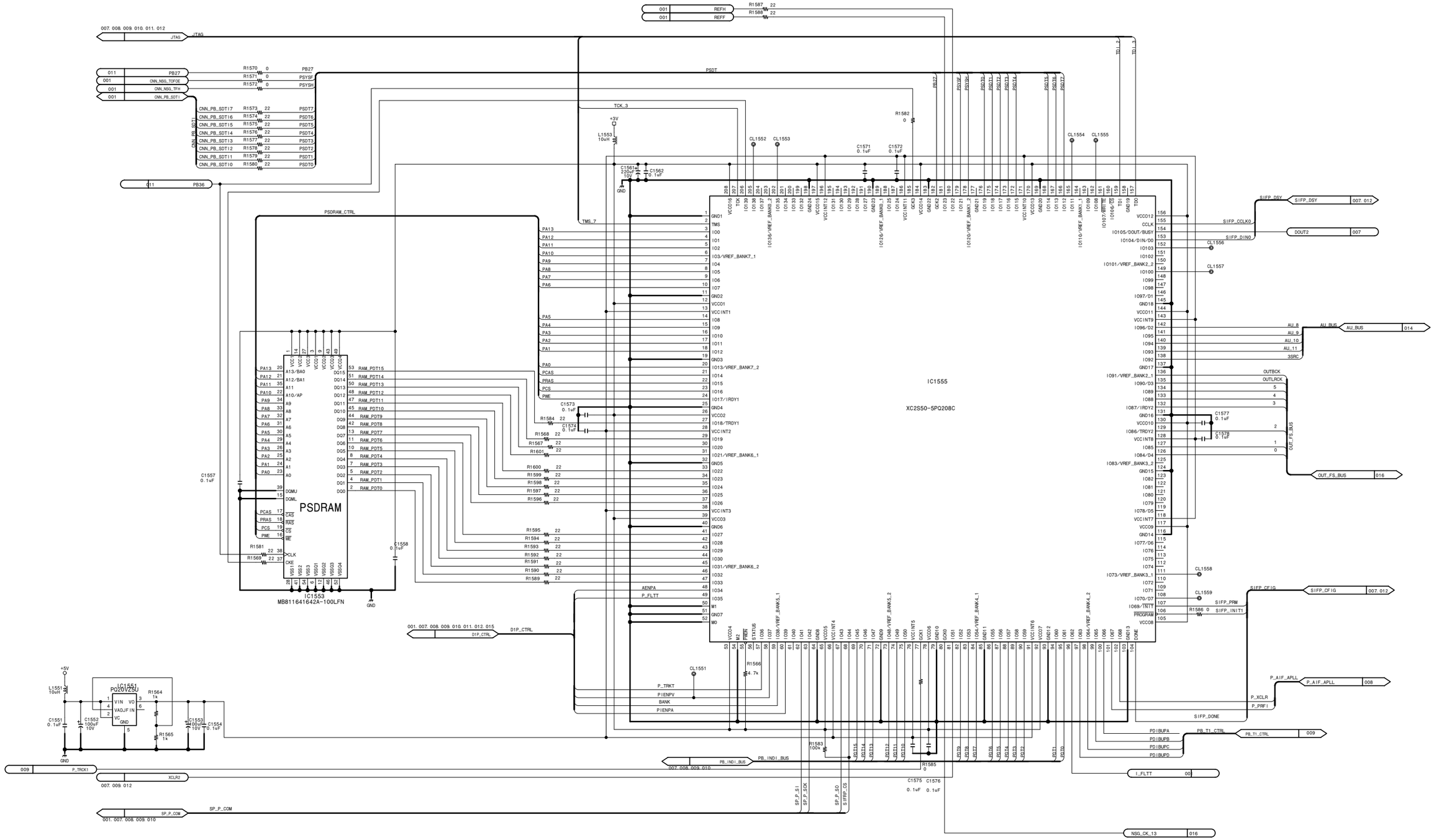

System/servo/analog audio input・output process

SSP-23 (13/16)

BOARD NO. 1-679-103-11
LOT NO. 064-
DSR-1600_SSP-23_011_13

SSP-23 (14/16)

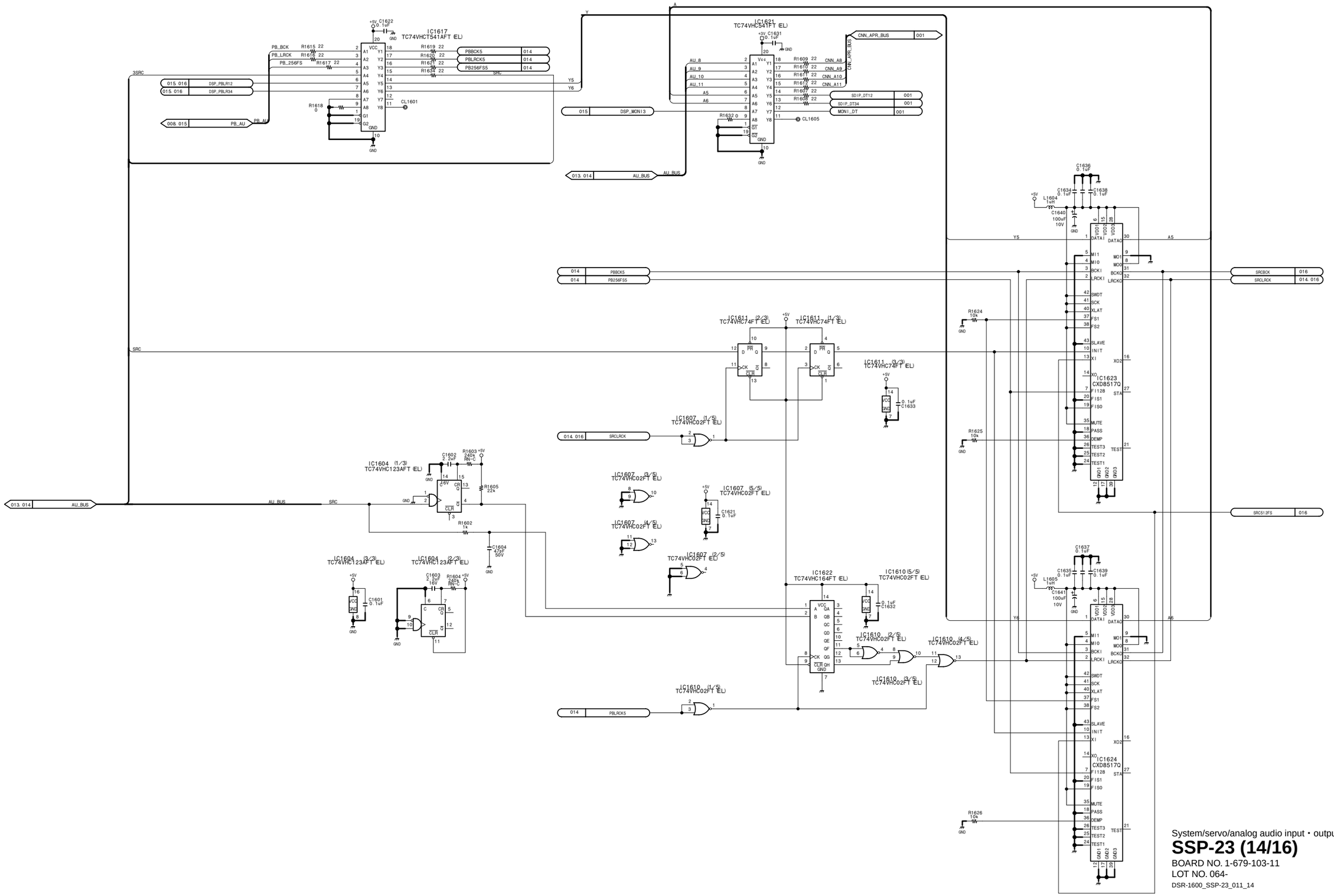

System/servo/analog audio input・output process

SSP-23 (14/16)

BOARD NO. 1-679-103-11
LOT NO. 064-
DSR-1600_SSP-23_011_14

SSP-23 (15/16)

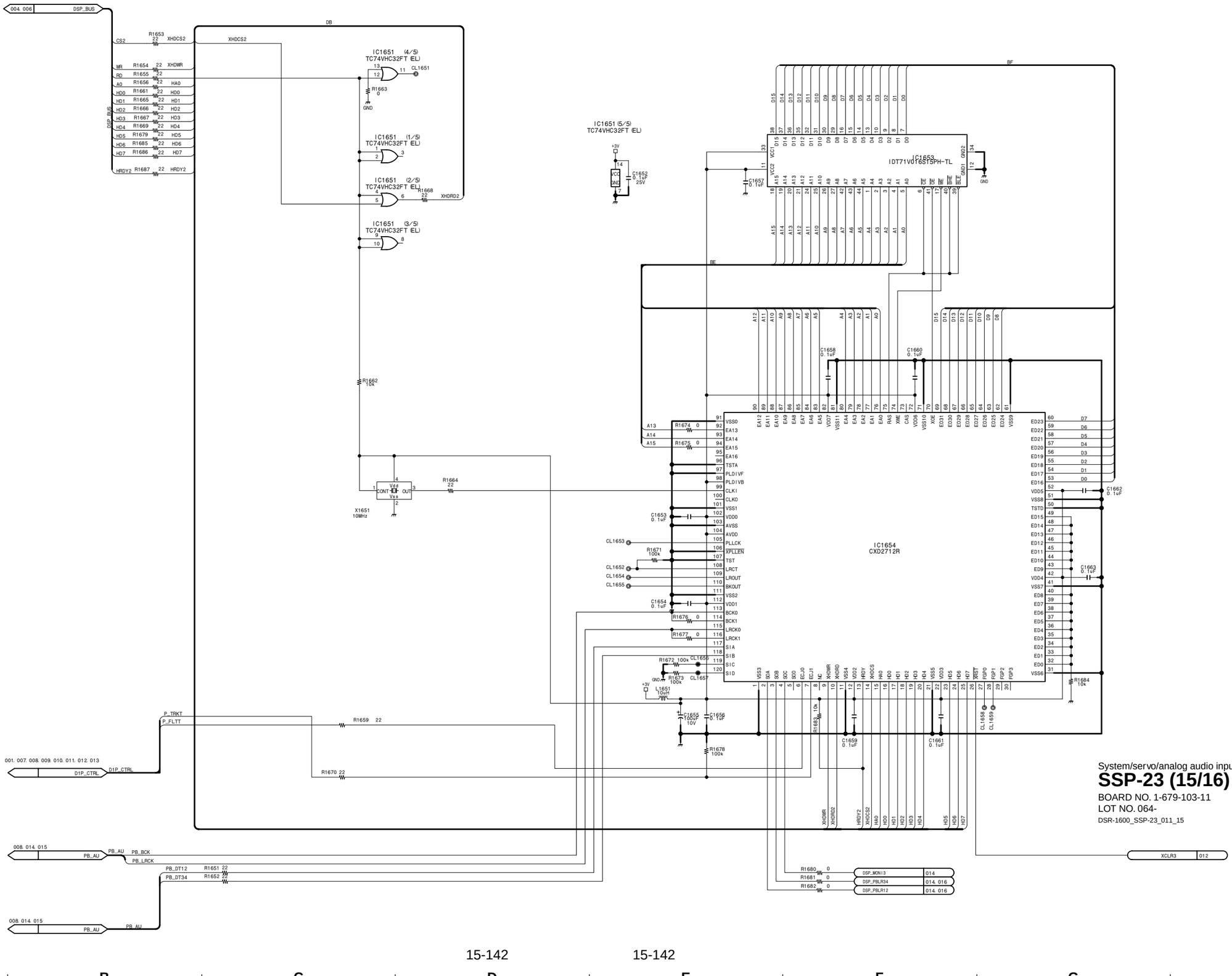

System/servo/analog audio input・output process

SSP-23 (15/16)

BOARD NO. 1-679-103-11
LOT NO. 064-
DSR-1600_SSP-23_011_15

15-142

SSP-23 (16/16)

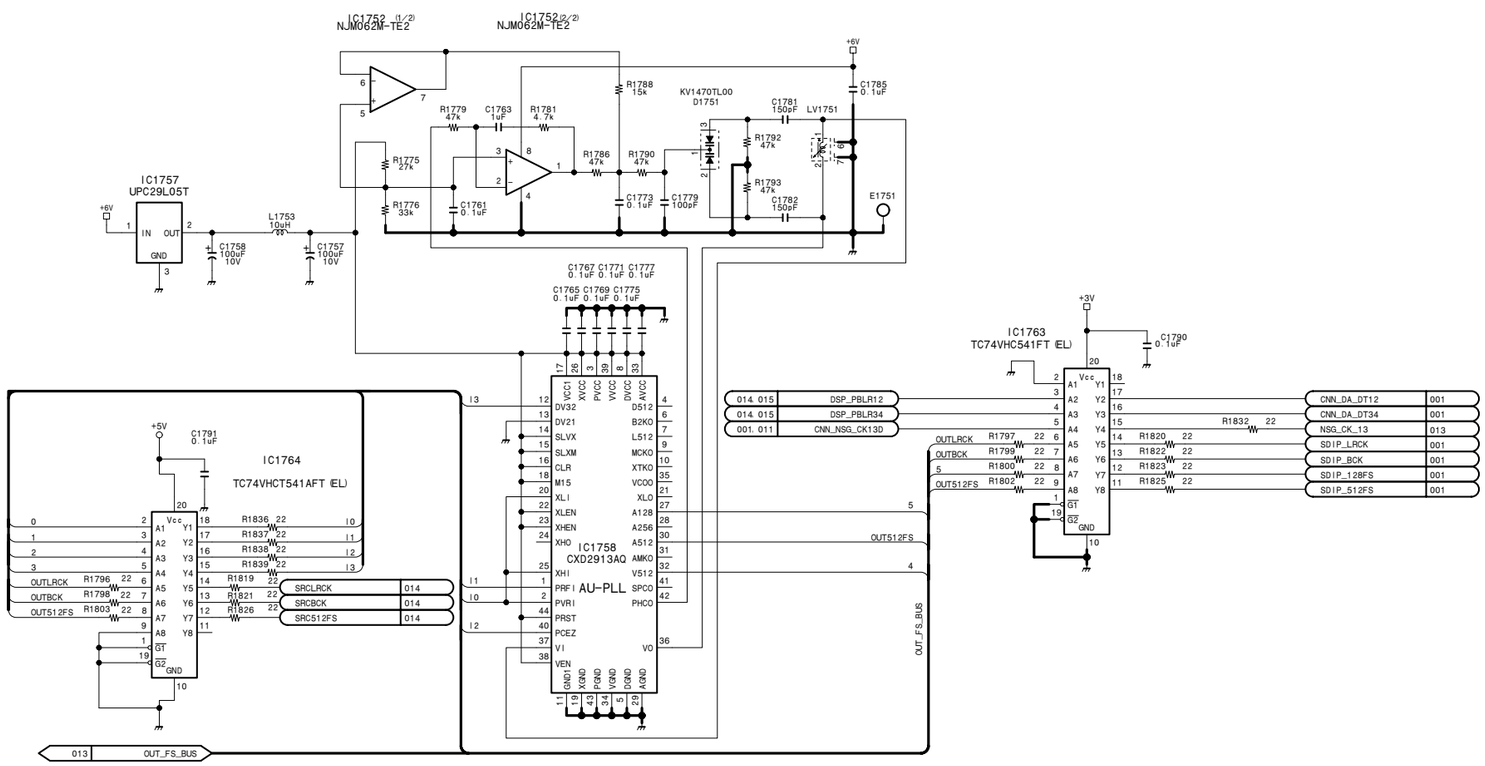

System/servo/analog audio input・output process

SSP-23 (16/16)

BOARD NO. 1-679-103-11
LOT NO. 064-
DSR-1600_SSP-23_011_16

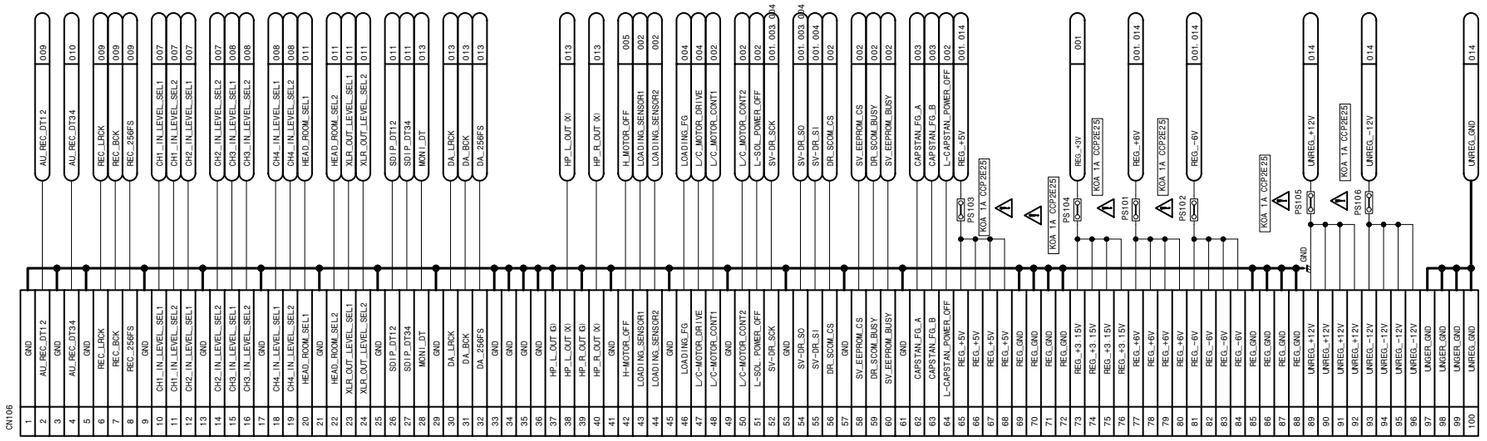

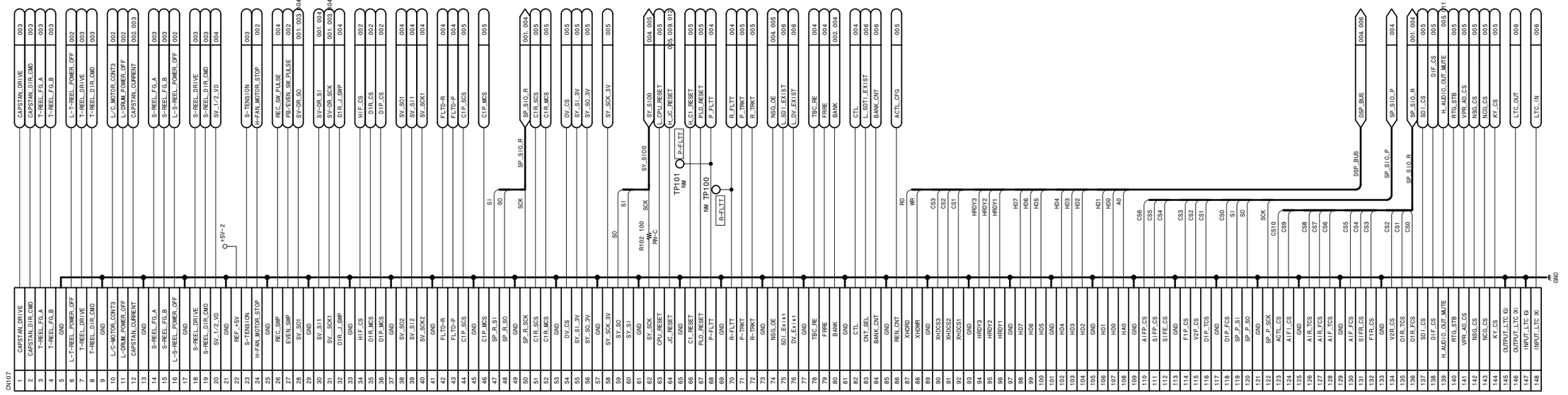

System/servo/digital process

SSP-24/24A (1/14)

BOARD NO. 1-679-116-12

LOT NO. 064-

DSR-1800_SSP-24_012_1

SSP-24/24A (2/14)

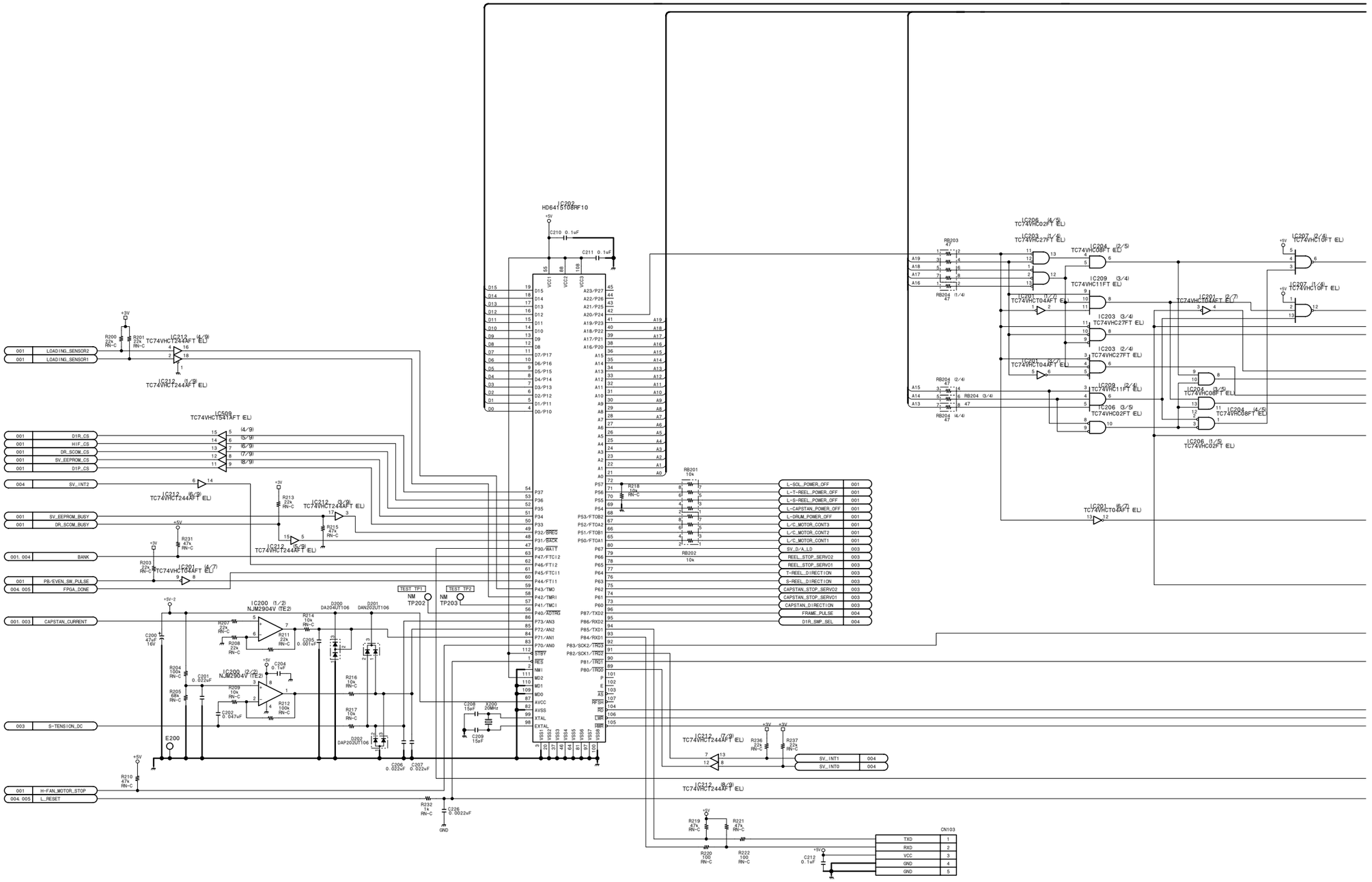

SSP-24/24A (2/14)

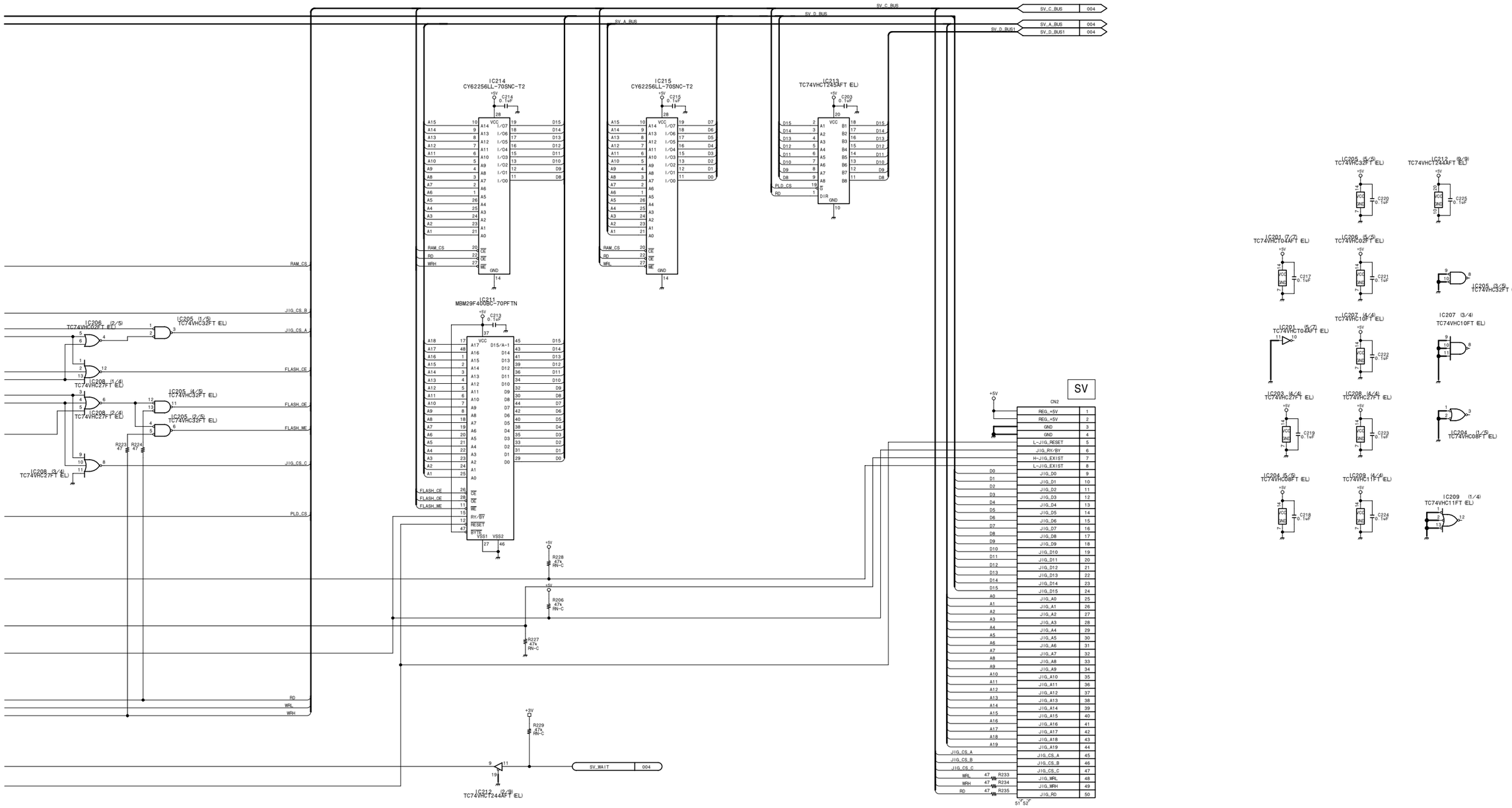

System/servo/digital process

SSP-24/24A (2/14)

BOARD NO. 1-679-116-12
LOT NO. 064-
DSR-1800_SSP-24_012_2

SSP-24/24A (3/14)

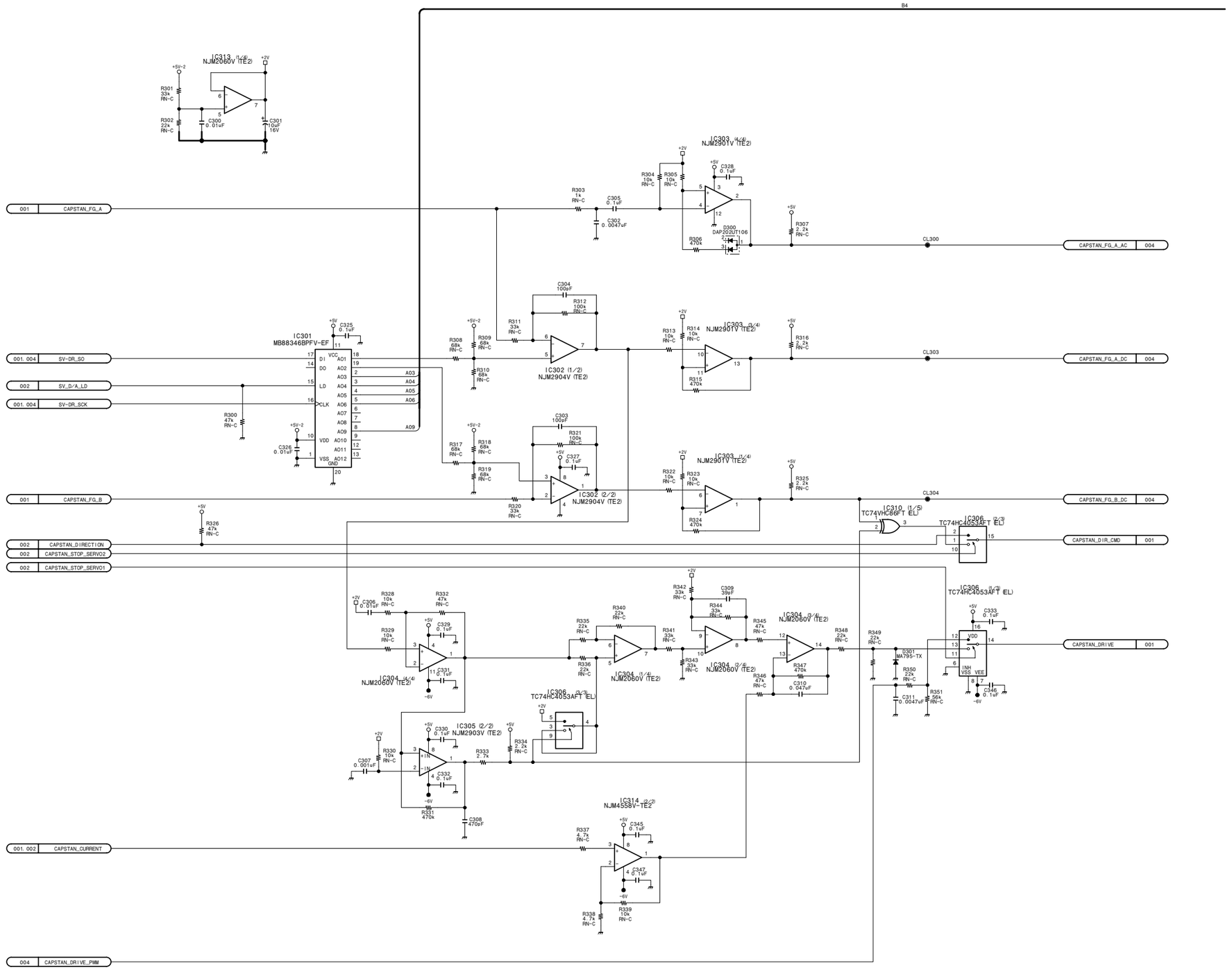

15-148

http://getMANUAL.com

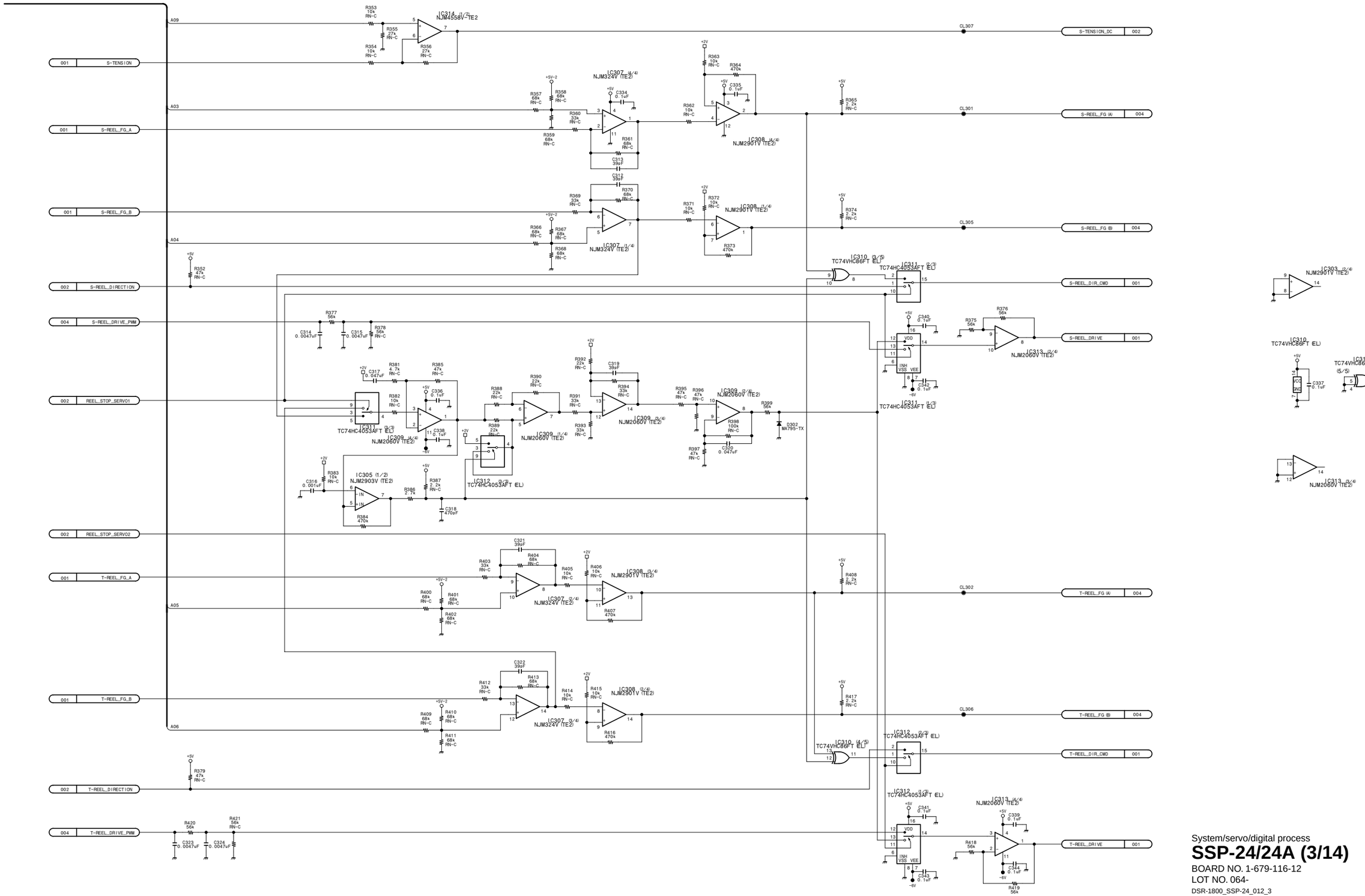

System/servo/digital process

SSP-24/24A (3/14)

BOARD NO. 1-679-116-12

LOT NO. 064-

DSR-1800_SSP-24_012_3

SSP-24/24A (4/14)

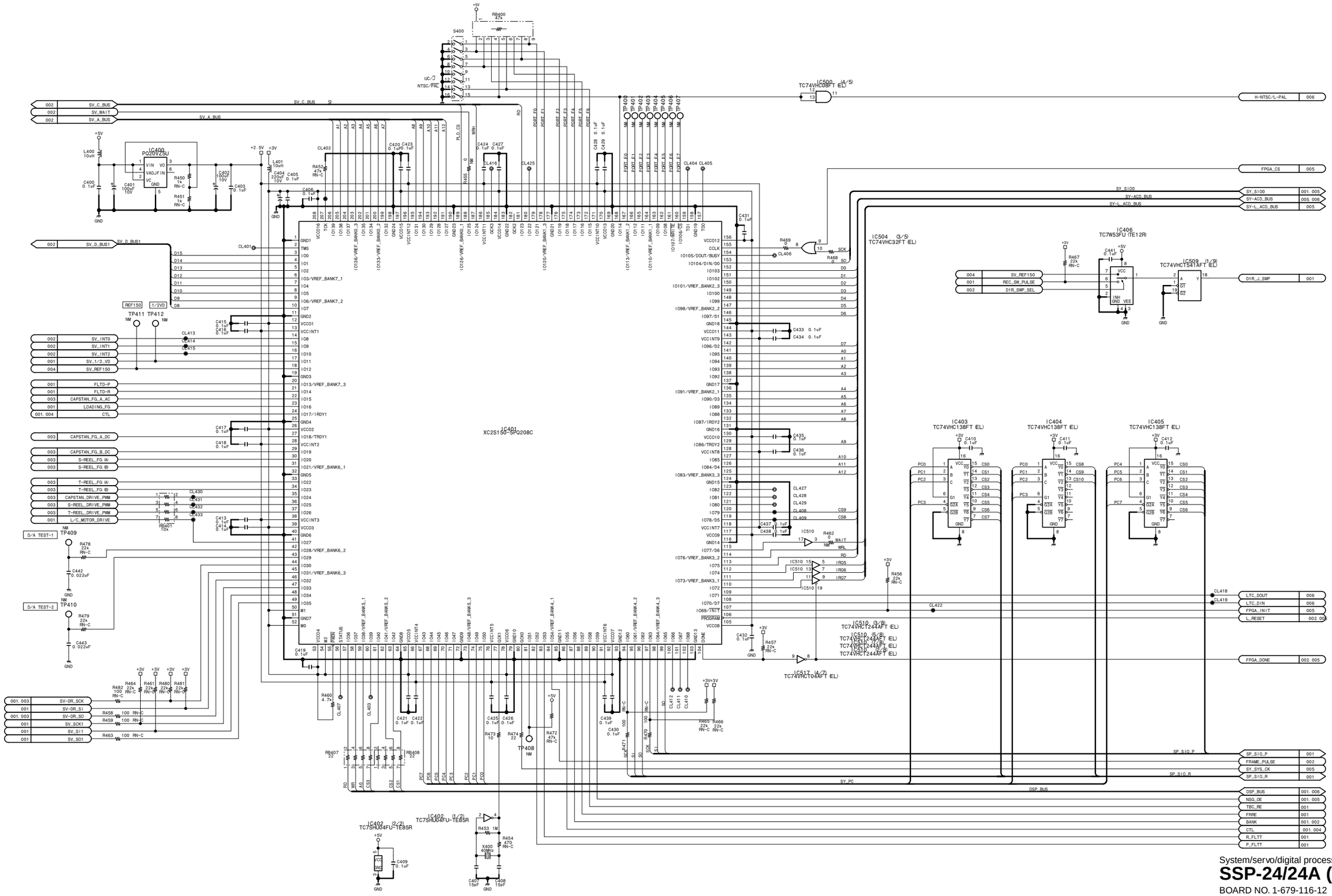

System/servo/digital process

SSP-24/24A (4/14)

BOARD NO. 1-679-116-12
LOT NO. 064-
DSR-1800_SSP-24_012_4

SSP-24/24A (5/14)

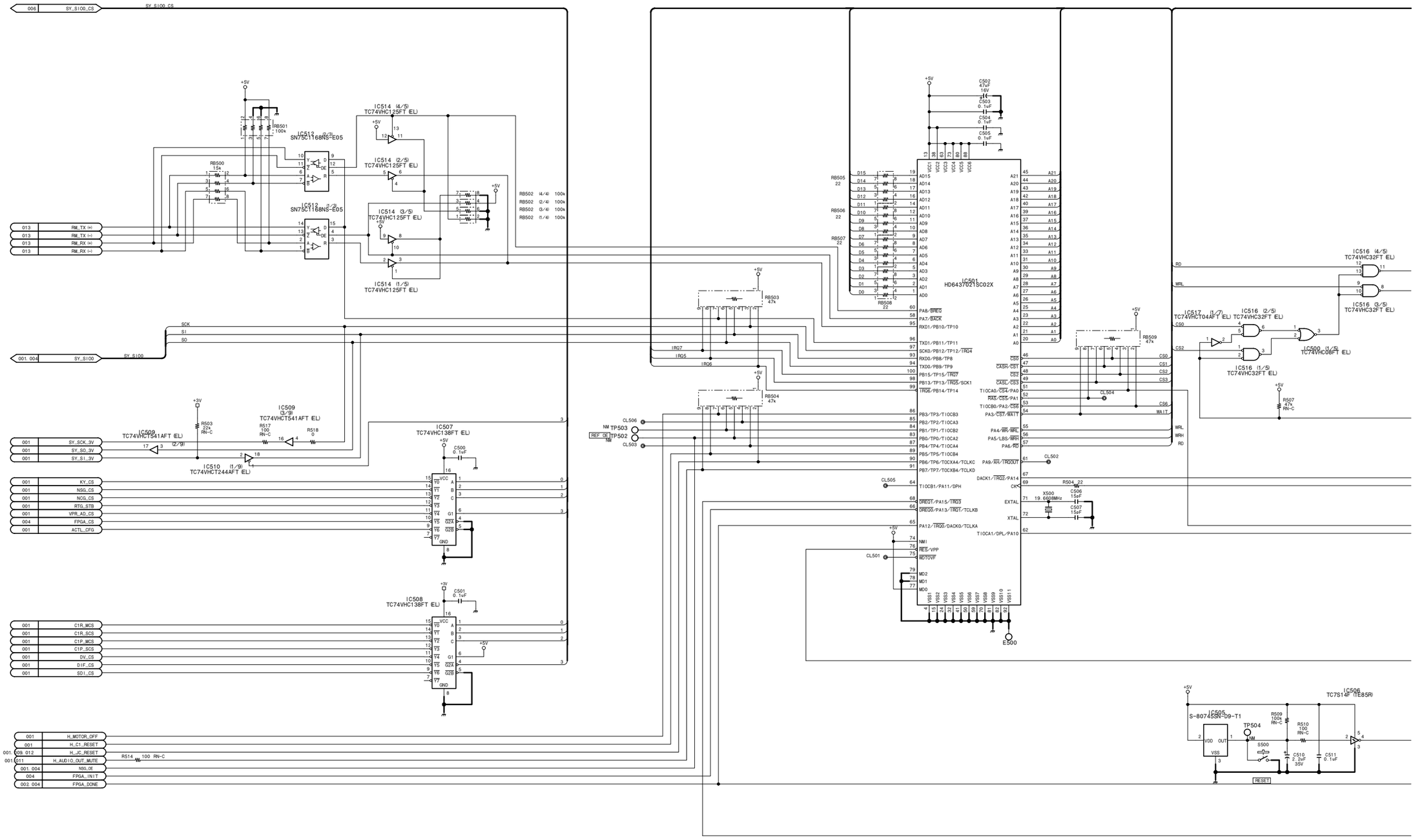

15-152

SSP-24/24A (5/14)

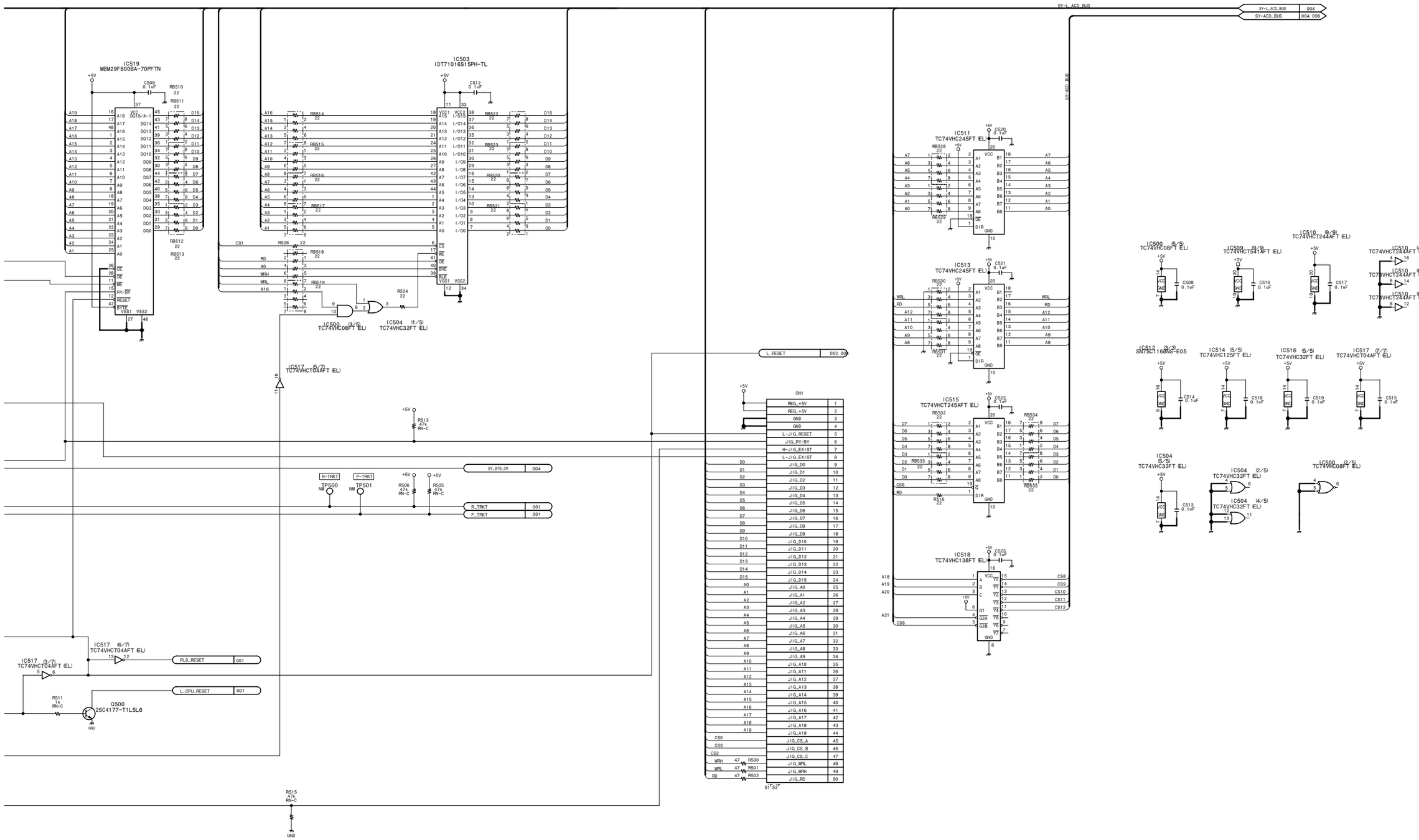

System/servo/digital process

SSP-24/24A (5/14)

BOARD NO. 1-679-116-12

LOT NO. 064-

DSR-1800_SSP-24_012_5

SSP-24/24A (6/14)

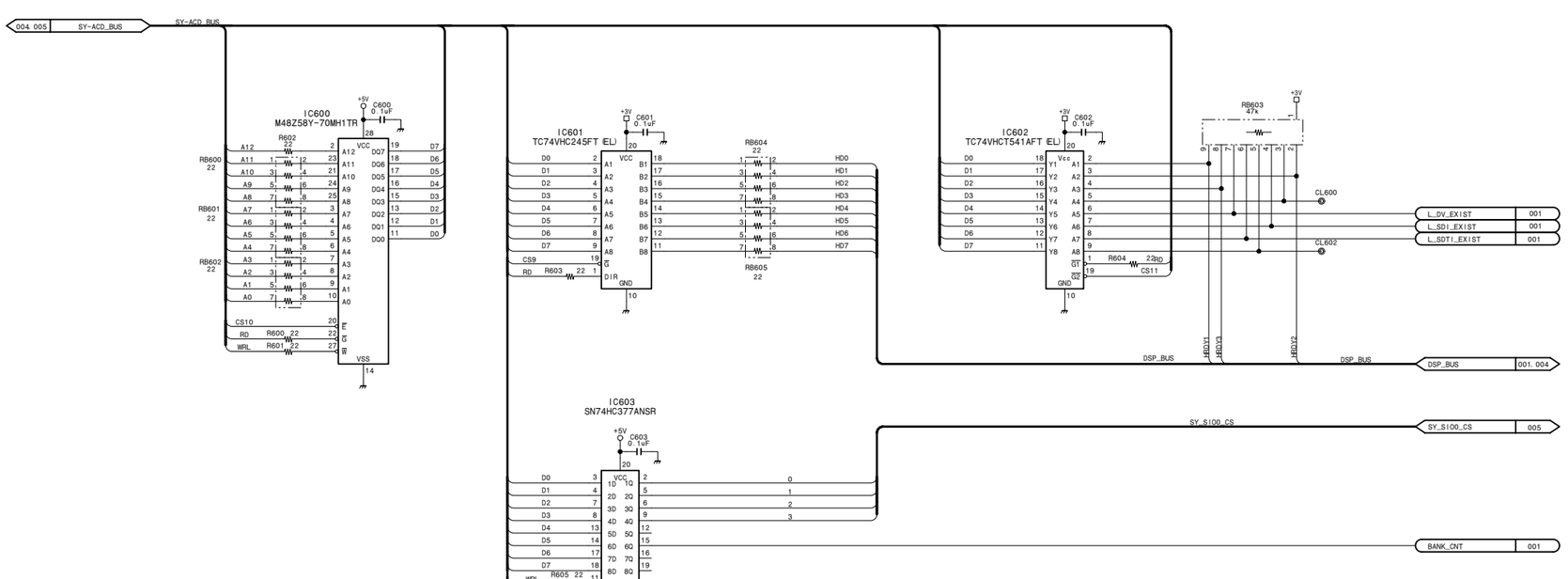

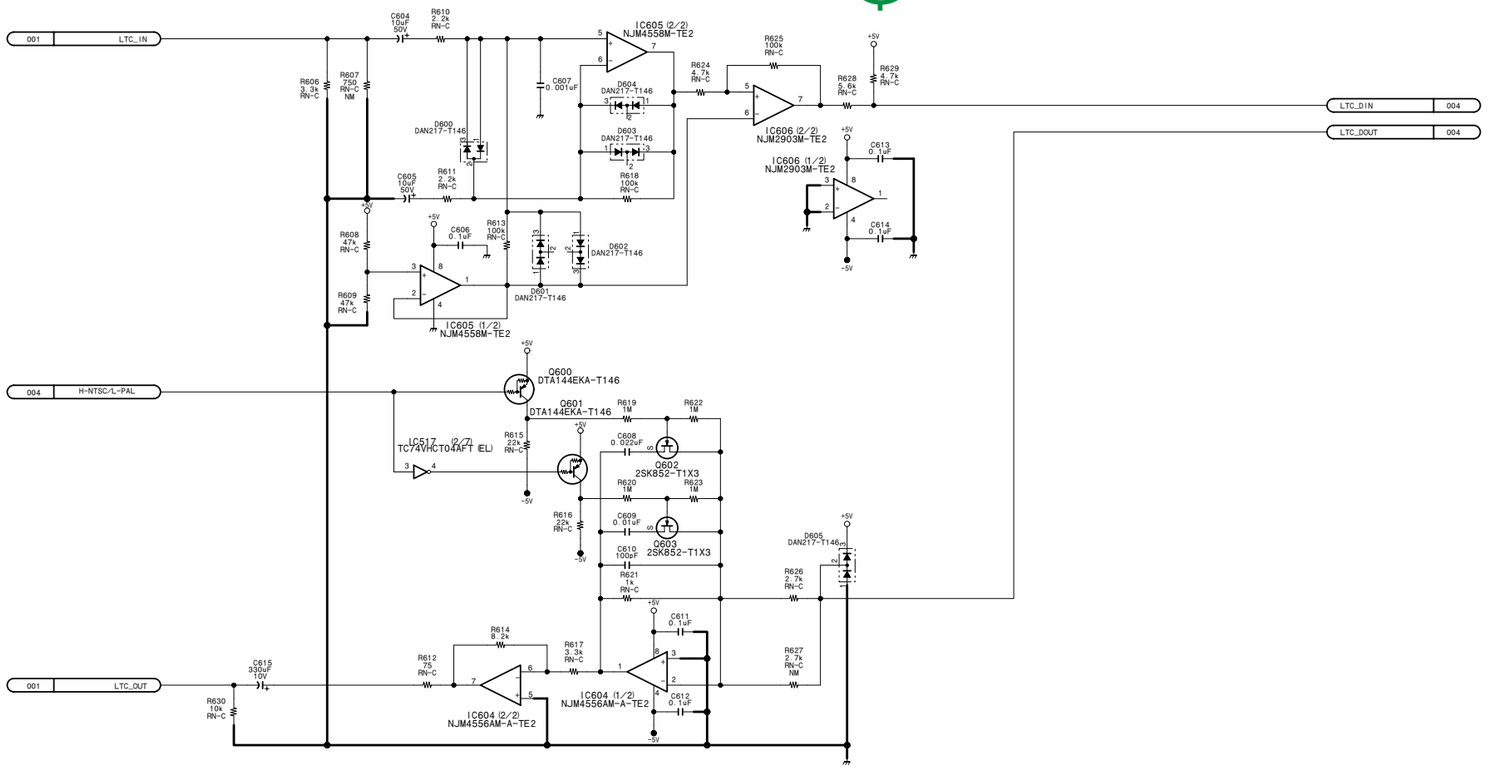

System/servo/digital process

SSP-24/24A (6/14)

BOARD NO. 1-679-116-12

LOT NO. 064-

DSR-1800_SSP-24_012_6

15-154

DSR-1800/P/1600/P

SSP-24/24A (7/14)

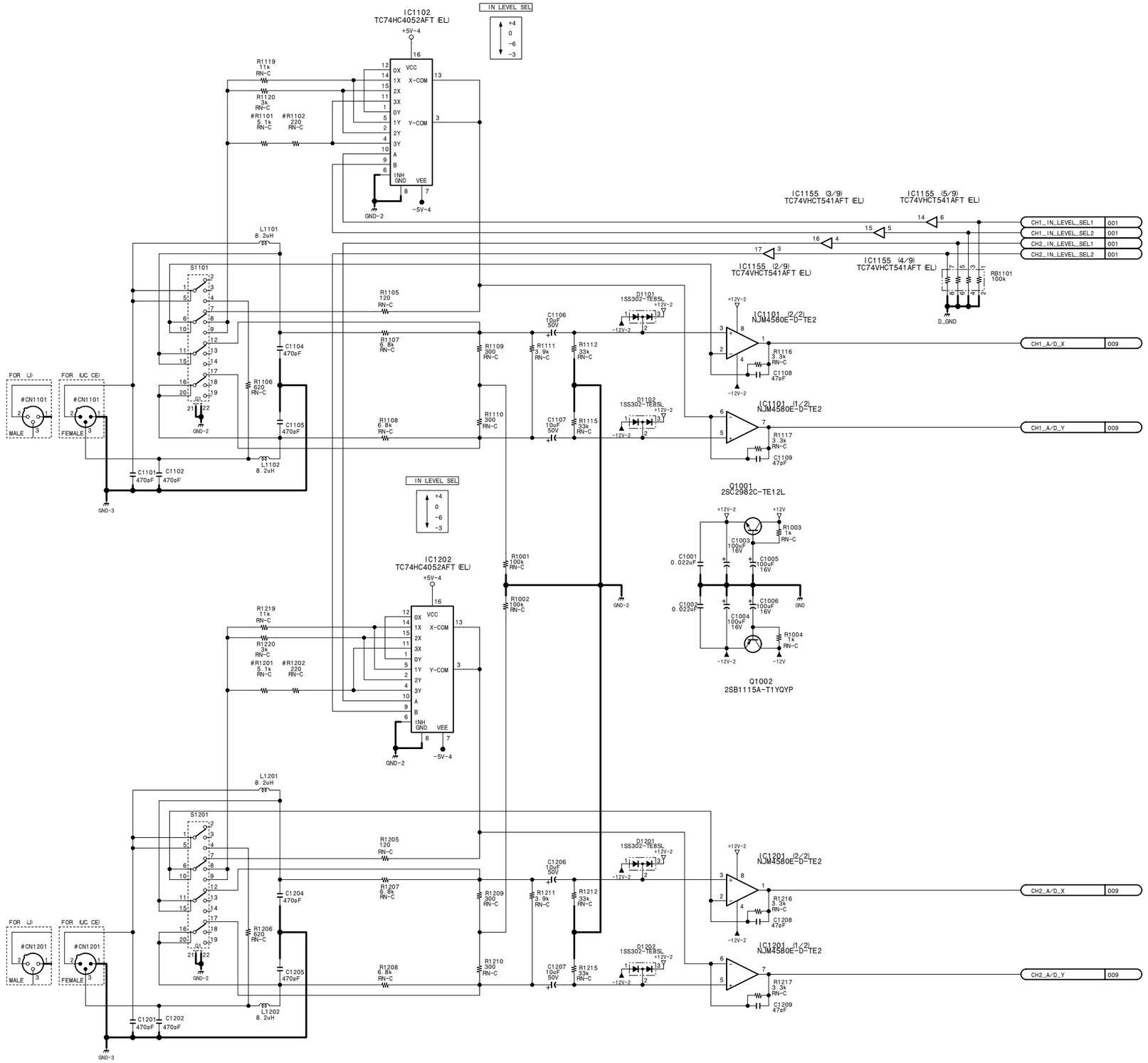

#	UC	J
CN1101	—— 179409911	—— 179409711
CN1201	—— 179409911	—— 179409711
R1101	5.1k 1/16W 0.5%	NM
R1102	220 1/16W 0.5%	NM
R1201	5.1k 1/16W 0.5%	NM
R1202	220 1/16W 0.5%	NM

System/servo/digital process

SSP-24/24A (7/14)

BOARD NO. 1-679-116-12

LOT NO. 064-

DSR-1800_SSP-24_012_7

SSP-24/24A (8/14)

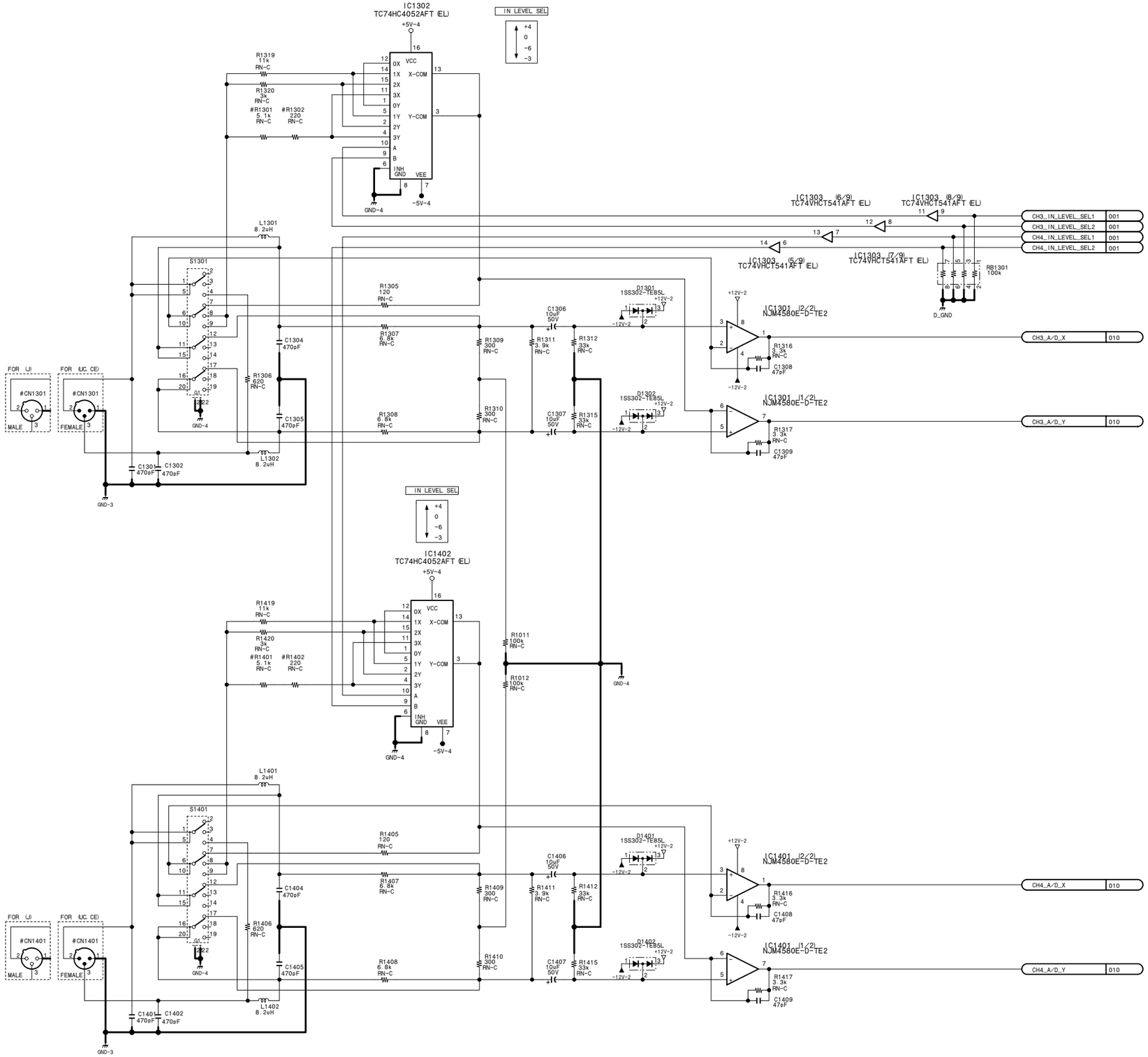

#	UC	J
CN1301	——— 179409911	——— 179409711
CN1401	——— 179409911	——— 179409711
R1301	5.1k 1/16W 0.5%	NM
R1302	220 1/16W 0.5%	NM
R1401	5.1k 1/16W 0.5%	NM
R1402	220 1/16W 0.5%	NM

System/servo/digital process

SSP-24/24A (8/14)

BOARD NO. 1-679-116-12
LOT NO. 064-
DSR-1800_SSP-24_012_8

15-156

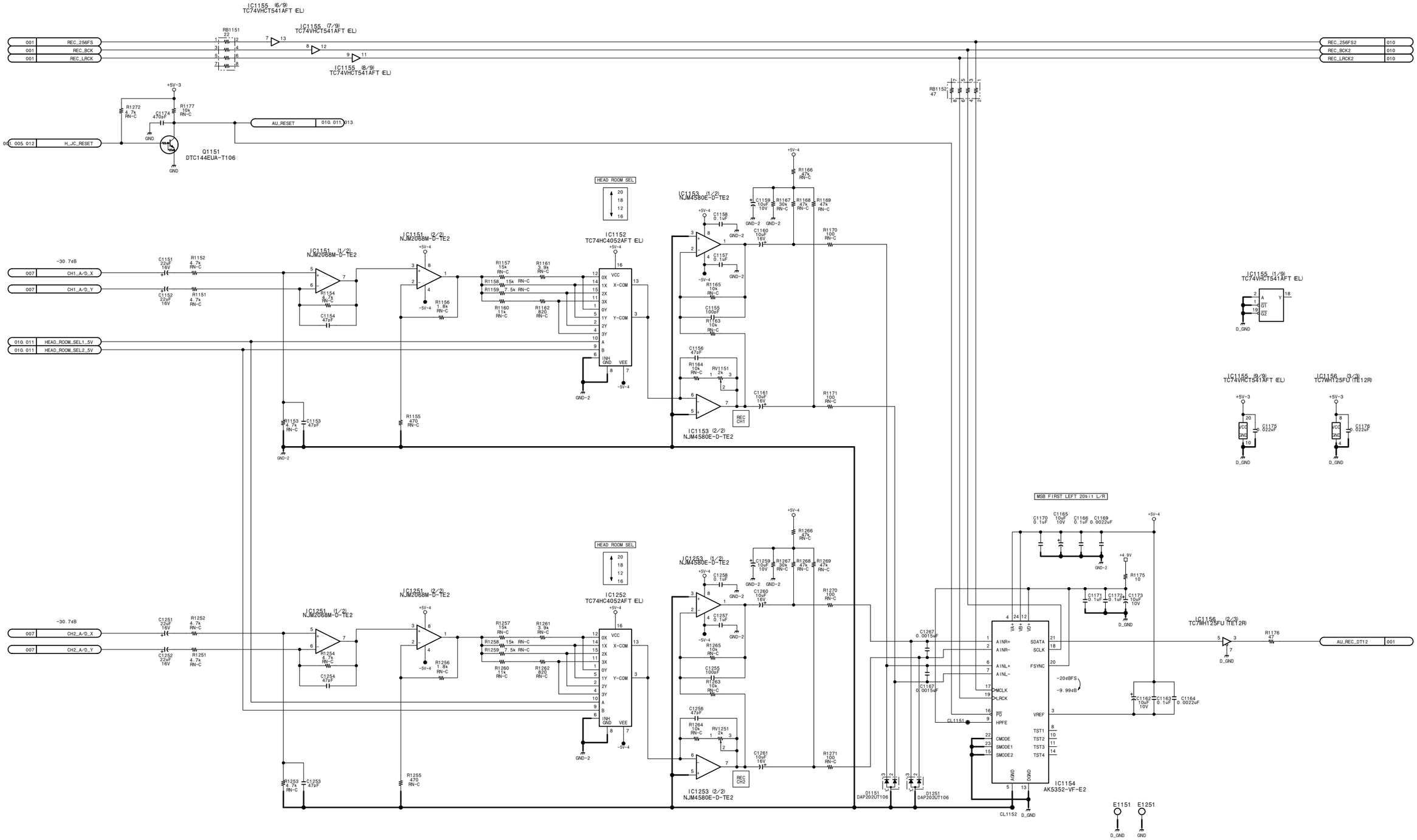

System/servo/digital process

SSP-24/24A (9/14)

BOARD NO. 1-679-116-12

LOT NO. 064-

DSR-1800_SSP-24_012_9

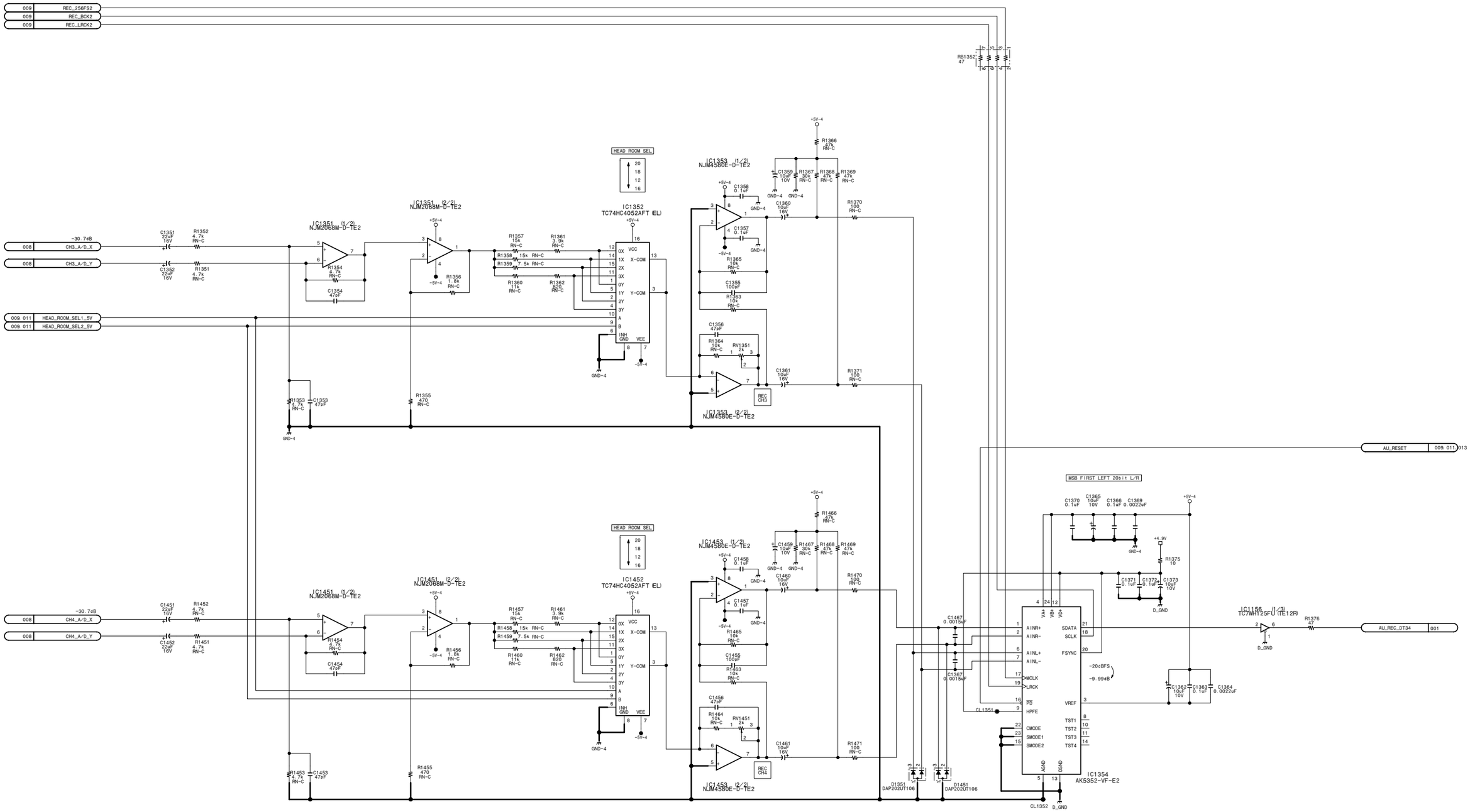

System/servo/digital process

SSP-24/24A (10/14)

BOARD NO. 1-679-116-12
LOT NO. 064-
DSR-1800_SSP-24_012_10

http://getMANUAL.com

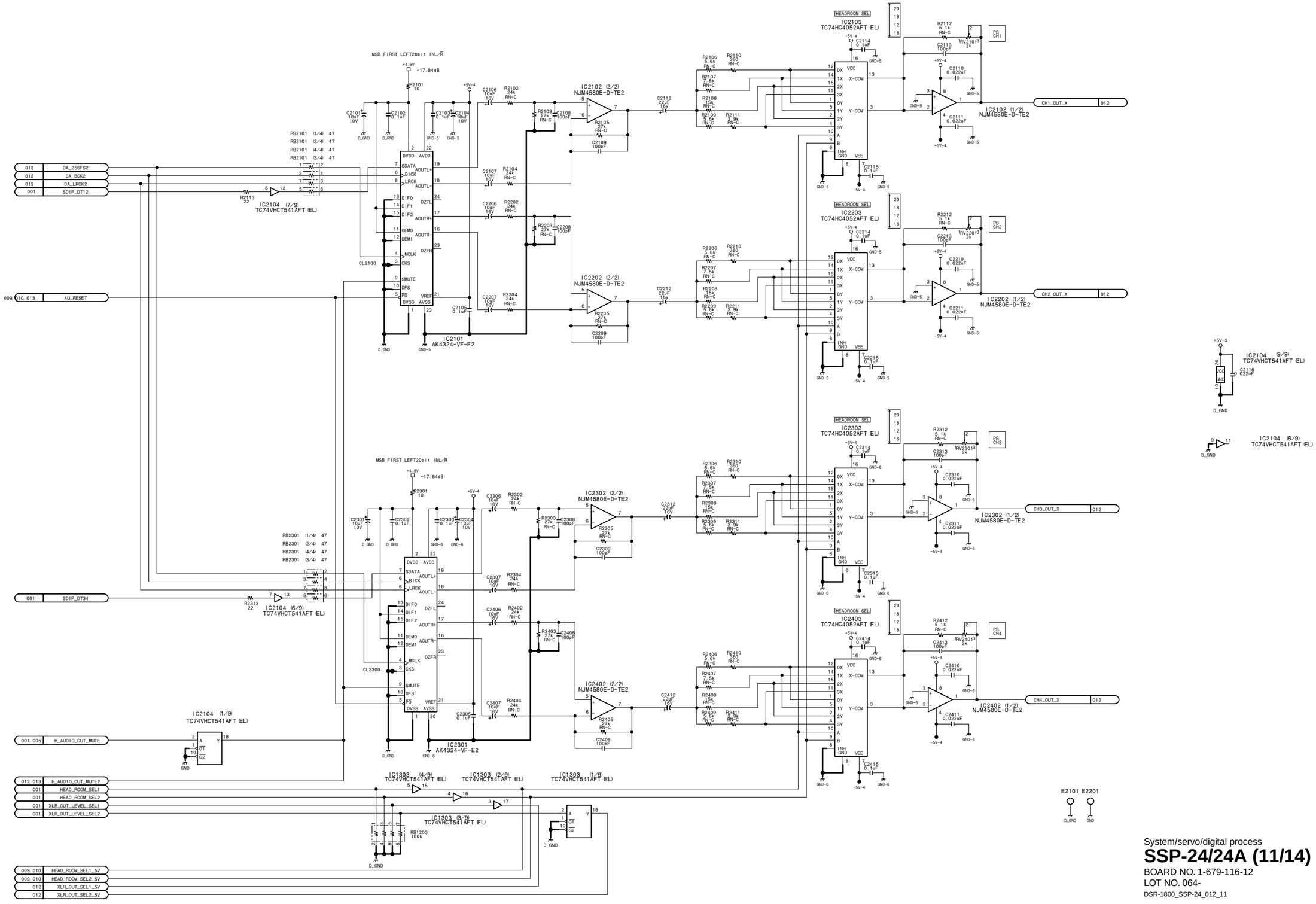

System/servo/digital process

SSP-24/24A (11/14)

BOARD NO. 1-679-116-12

LOT NO. 064-

DSR-1800_SSP-24_012_11

SSP-24/24A (12/14)

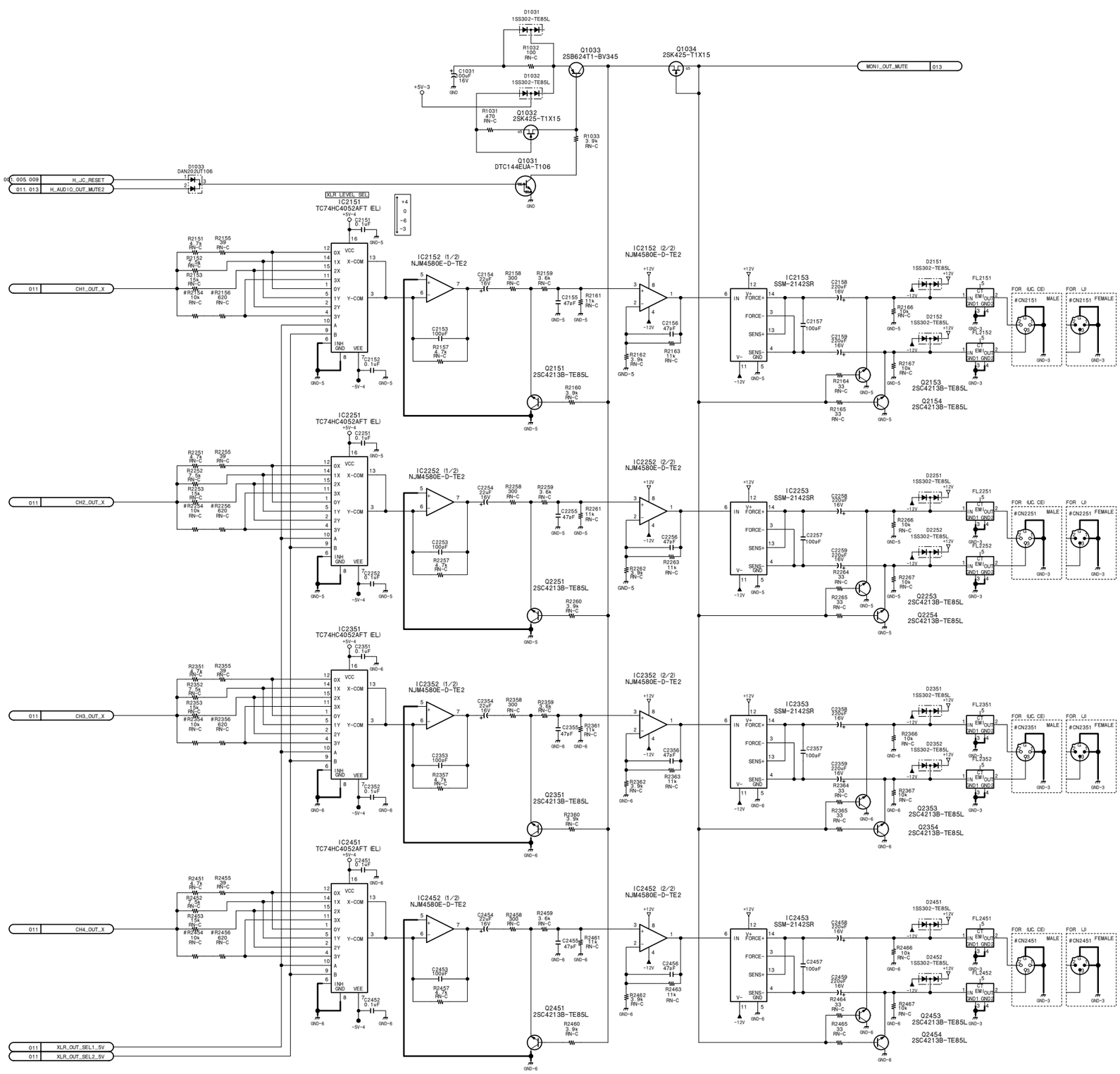

#	UC	J
CN2151	—— 179409711	—— 179409911
CN2251	—— 179409711	—— 179409911
CN2351	—— 179409711	—— 179409911
CN2451	—— 179409711	—— 179409911
R2154	10k 1/16W 0.5%	NM
R2156	620 1/16W 0.5%	NM
R2254	10k 1/16W 0.5%	NM
R2256	620 1/16W 0.5%	NM
R2354	10k 1/16W 0.5%	NM
R2356	620 1/16W 0.5%	NM
R2454	10k 1/16W 0.5%	NM
R2456	620 1/16W 0.5%	NM

15-160

15-160

System/servo/digital process

SSP-24/24A (12/14)

BOARD NO. 1-679-116-12

LOT NO. 064-

DSR-1800_SSP-24_012_12

SSP-24/24A (13/14)

System/servo/digital process

SSP-24/24A (13/14)

BOARD NO. 1-679-116-12

LOT NO. 064-

DSR-1800_SSP-24_012_13

SSP-24/24A (14/14)

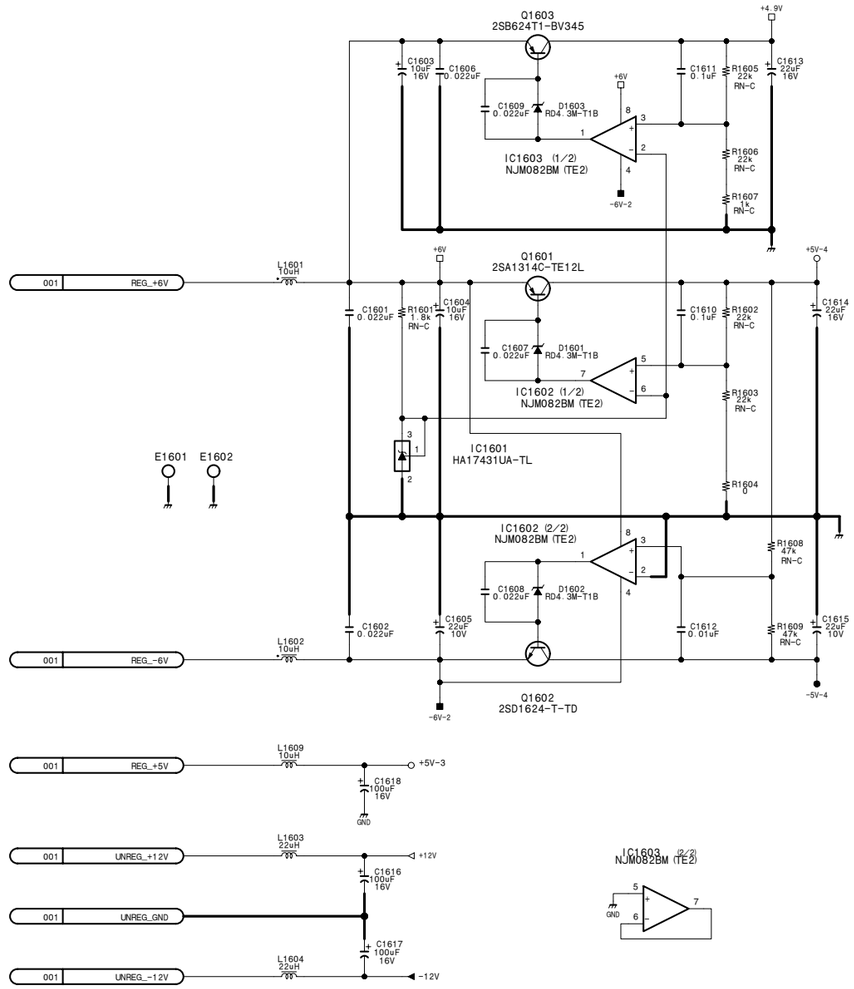

System/servo/digital process

SSP-24/24A (14/14)

BOARD NO. 1-679-116-12
LOT NO. 064-
DSR-1800_SSP-24_012_14

15-162

VPR-71 (1/13)

CN104

1	GND		
2	ADY0	CN_ADY0	005
3	ADY1	CN_ADY1	005
4	ADY2	CN_ADY2	005
5	GND		
6	ADY3	CN_ADY3	005
7	ADY4	CN_ADY4	005
8	ADY5	CN_ADY5	005
9	GND		
10	ADY6	CN_ADY6	005
11	ADY7	CN_ADY7	005
12	ADY8	CN_ADY8	005
13	GND		
14	ADY9	CN_ADY9	005
15	ADC0	CN_ADC0	005
16	ADC1	CN_ADC1	005
17	GND		
18	ADC2	CN_ADC2	005
19	ADC3	CN_ADC3	005
20	ADC4	CN_ADC4	005
21	GND		
22	ADC5	CN_ADC5	005
23	ADC6	CN_ADC6	005
24	ADC7	CN_ADC7	005
25	GND		
26	ADC8	CN_ADC8	005
27	ADC9	CN_ADC9	005
28	AD_CK13	CN_AD_CK13	005
29	GND		
30	Y_CLAMP	CN_Y_CLAMP	005
31	C_CLAMP	CN_C_CLAMP	005
32	SPARE 1	CL100	
33	GND		
34	JSYC	CN_JSYC	005
35	AFC_OE	CN_AFC_OE	006
36	AFC_HD	CN_AFC_HD	006
37	GND		
38	AFC_VD	CN_AFC_VD	006
39	AFC_CK13D	CN_AFC_CK13D	006
40	SPARE 2	CL101	
41	GND		
42	RTG_STB	CN_RTG_STB	004
43	N.C		
44	N.C		
45	GND		
46	N.C		
47	N.C		
48	SPARE 3	CL102	
49	GND		
50	GND		
51	GND		
52	N.C		
53	GND		
54	GND		
55	GND		
56	N.C		
57	GND		
58	GND		
59	GND		
60	GND		
61	GND		
62	GND		
63	GND		
64	GND		
65	REG+5V	CN_REG+5V	010
66	REG+5V		
67	REG+5V		
68	REG+5V		
69	+3.15V_GND		
70	+3.15V_GND		
71	+3.15V_GND		
72	+3.15V_GND		
73	REG+3.15V	CN_REG+3.15V	010
74	REG+3.15V		
75	REG+3.15V		
76	REG+3.15V		
77	REG+6V	CN_REG+6V	010
78	REG+6V		
79	REG+6V		
80	REG+6V		
81	REG-6V	CN_REG-6V	010
82	REG-6V		
83	REG-6V		
84	REG-6V		
85	REG_GND		
86	REG_GND		
87	REG_GND		
88	REG_GND		
89	UNREG+12V	CN_UNREG+12V	010
90	UNREG+12V		
91	UNREG+12V		
92	UNREG+12V		
93	UNREG-12V	CN_UNREG-12V	010
94	UNREG-12V		
95	UNREG-12V		
96	UNREG-12V		
97	UNREG_GND		
98	UNREG_GND		
99	UNREG_GND		
100	UNREG_GND		

CN105

1	GND		
2	NSG_OE	CN_NSG_OE	012
3	NSG_CS	CN_NSG_CS	012
4	NCG_CS	CN_NCG_CS	012
5	GND		
6	VPR_AD_CS	CN_VPR_AD_CE	011
7	SY_SI	CN_SY_SI	011. 012
8	SY_SO	CN_SY_SO	004. 011. 012
9	GND		
10	SY_SCK	CN_SY_SCK	004. 011. 012
11	CPU_RESET	CN_CPU_RESET	012
12	JC_RESET	CN_JC_RESET	012
13	GND		
14	N.C		
15	N.C		
16	SPARE 4	CL103	
17	GND		
18	SGCK13	CN_SGCK13	012
19	SGH	CN_SGH	012
20	SGOE	CN_SGOE	012
21	GND		
22	SDIRF	CN_SDIRF	012
23	SDIRCK27V	CN_SDIRCK27V	012
24	SDIRV	CN_SDIRV	012
25	GND		
26	SDIRH	CN_SDIRH	012
27	SDTIRF	CN_SDTIRF	012
28	SDTICK27	CN_SDTICK27	012
29	GND		
30	SDTIRV	CN_SDTIRV	012
31	SDTIRH	CN_SDTIRH	012
32	NSG_OFOE	CN_NSG_OFOE	012
33	GND		
34	NSG_FH	CN_NSG_FH	012
35	NSG_TOFOE	CN_NSG_TOFOE	012
36	NSG_TFH	CN_NSG_TFH	012
37	GND		
38	NSG_VD	CN_NSG_VD	012
39	NSG_HD	CN_NSG_HD	012
40	NSG_JOE	CN_NSG_JOE	012
41	GND		
42	NSG_CK13D	CN_NSG_CK13D	012
43	NSG_CK27D	CN_NSG_CK27D	012
44	SPARE 5	CL104	
45	GND		
46	DAC9	CN_DAC9	007
47	DAC8	CN_DAC8	007
48	DAC7	CN_DAC7	007
49	GND		
50	DAC6	CN_DAC6	007
51	DAC5	CN_DAC5	007
52	DAC4	CN_DAC4	007
53	GND		
54	DAC3	CN_DAC3	007
55	DAC2	CN_DAC2	007
56	DAC1	CN_DAC1	007
57	GND		
58	DAC0	CN_DAC0	007
59	DA_CK13	CN_DA_CK13	007
60	SPARE 6	CL105	
61	GND		
62	DAY9	CN_DAY9	007
63	DAY8	CN_DAY8	007
64	DAY7	CN_DAY7	007
65	GND		
66	DAY6	CN_DAY6	007
67	DAY5	CN_DAY5	007
68	DAY4	CN_DAY4	007
69	GND		
70	DAY3	CN_DAY3	007
71	DAY2	CN_DAY2	007
72	DAY1	CN_DAY1	007
73	GND		
74	DAY0	CN_DAY0	007
75	LBY	CN_LBY	007
76	SPARE 7	CL106	
77	GND		
78	INPUT_LTC_X		
79	INPUT_LTC_G		
80	N.C		
81	GND		
82	OUTPUT_LTC_X		
83	OUTPUT_LTC_G		
84	SPARE 8	CL107	
85	GND		
86	LOC_SYNC_PHASE	CN_LOC_SYNC_PHASE	011
87	LOC_SC_PHASE	CN_LOC_SC_PHASE	011
88	VR_VCC	CN_VR_VCC	011
89	VR_GND		
90	GND		
91	GND		
92	N.C		
93	GND		
94	GND		
95	GND		
96	GND		
97	GND		
98	GND		
99	GND		
100	GND		

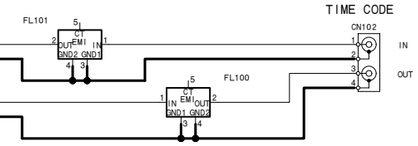

Analog video input・output process/reference

VPR-71 (1/13)

BOARD NO. 1-679-117-12
LOT NO. 064-
DSR-1800_VPR-71_012_1

VPR-71 (2/13)

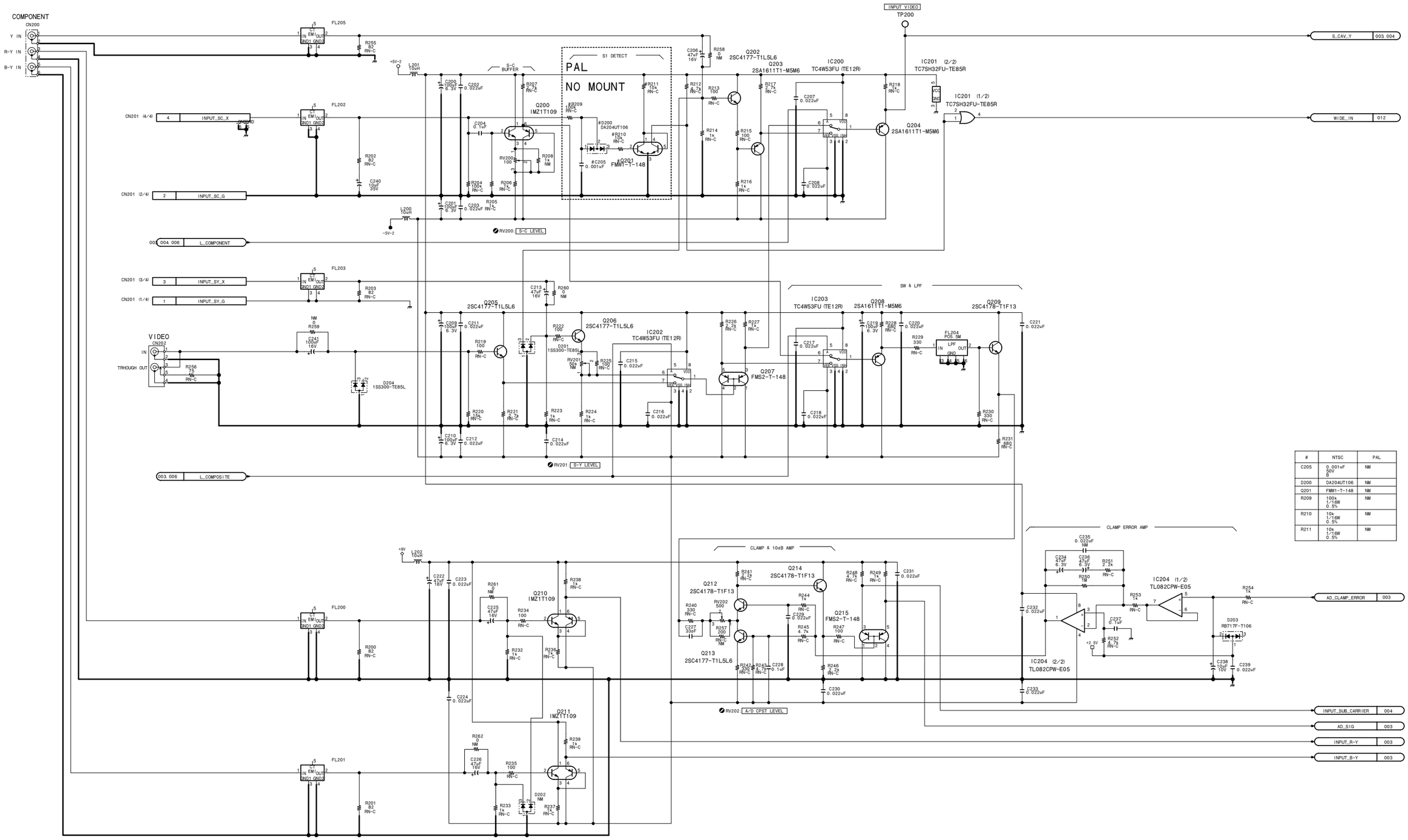

#	NTSC	PAL
C205	0.001uF 50V B	NM
D200	DA204UT106	NM
Q201	FMW1-T-148	NM
R209	100k 1/16W 0.5%	NM
R210	10k 1/16W 0.5%	NM
R211	10k 1/16W 0.5%	NM

Analog video input・output process/reference

VPR-71 (2/13)

BOARD NO. 1-679-117-12
LOT NO. 064-
DSR-1800_VPR-71_012_2

VPR-71 (3/13)

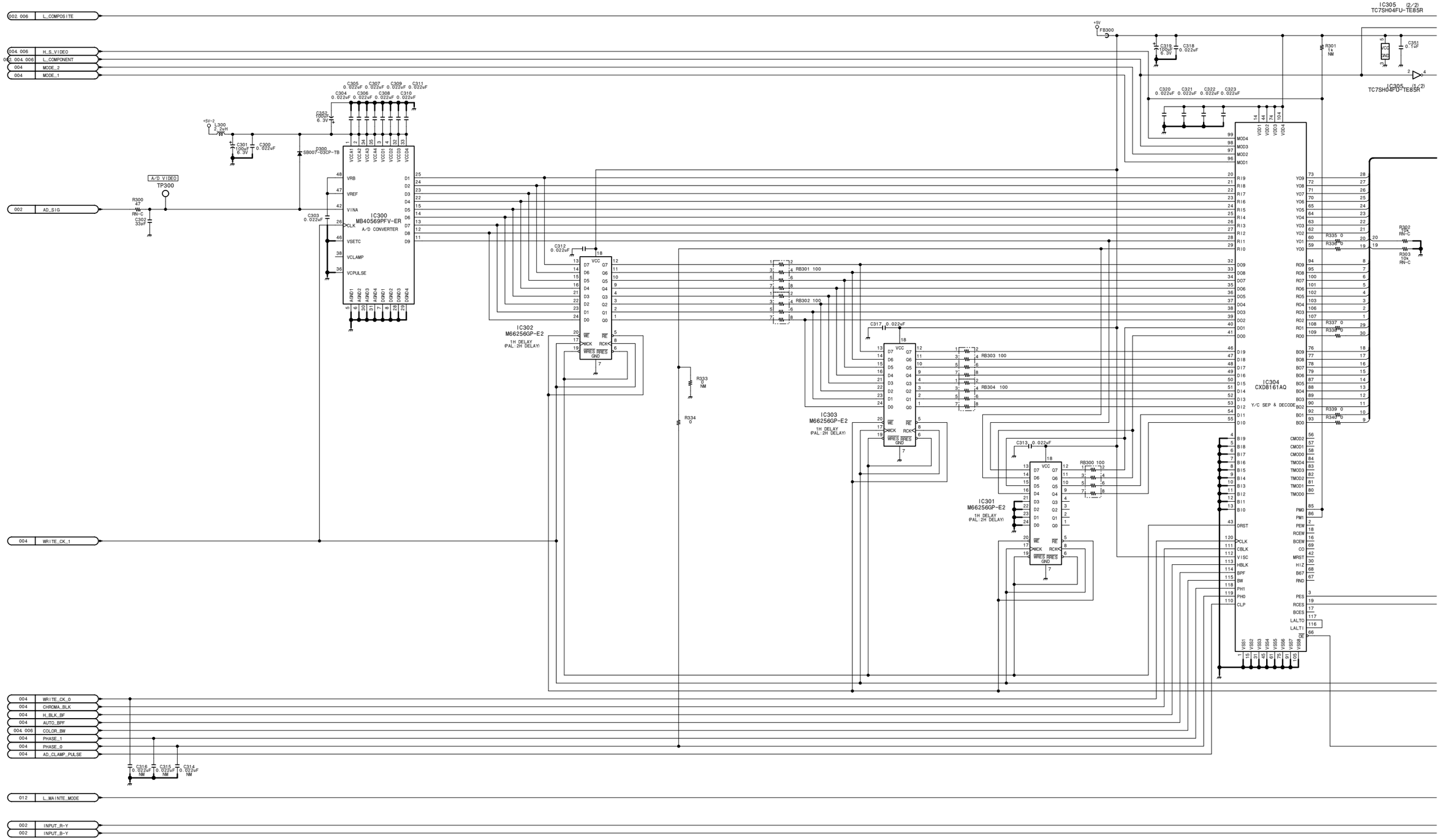

15-166

VPR-71 (3/13)

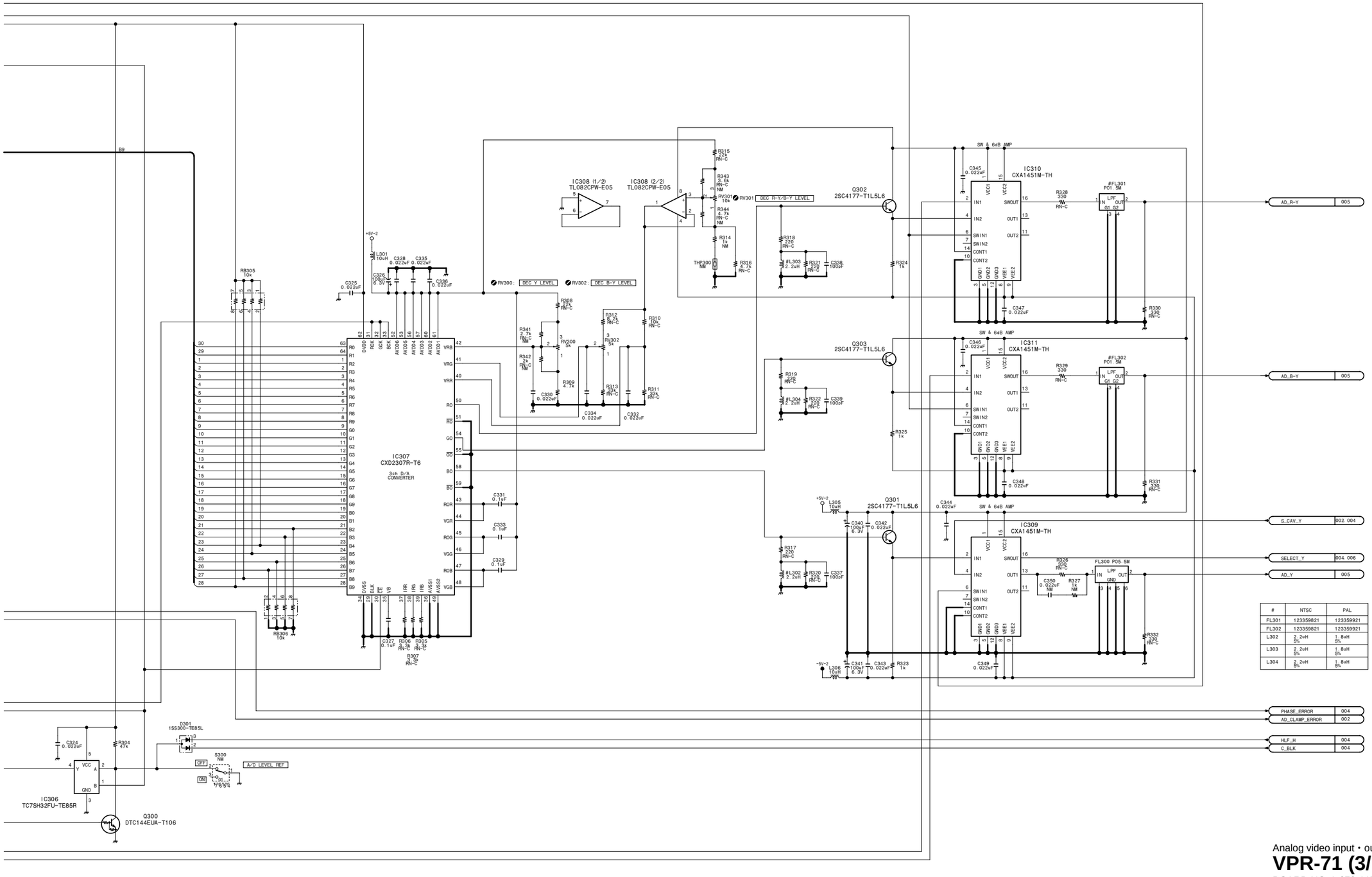

#	NTSC	PAL
FL301	123359821	123359921
FL302	123359821	123359921
L302	2.2uH 5%	1.8uH 5%
L303	2.2uH 5%	1.8uH 5%
L304	2.2uH 5%	1.8uH 5%

Analog video input・output process/reference

VPR-71 (3/13)

BOARD NO. 1-679-117-12
LOT NO. 064-
DSR-1800_VPR-71_012_3

VPR-71 (4/13)

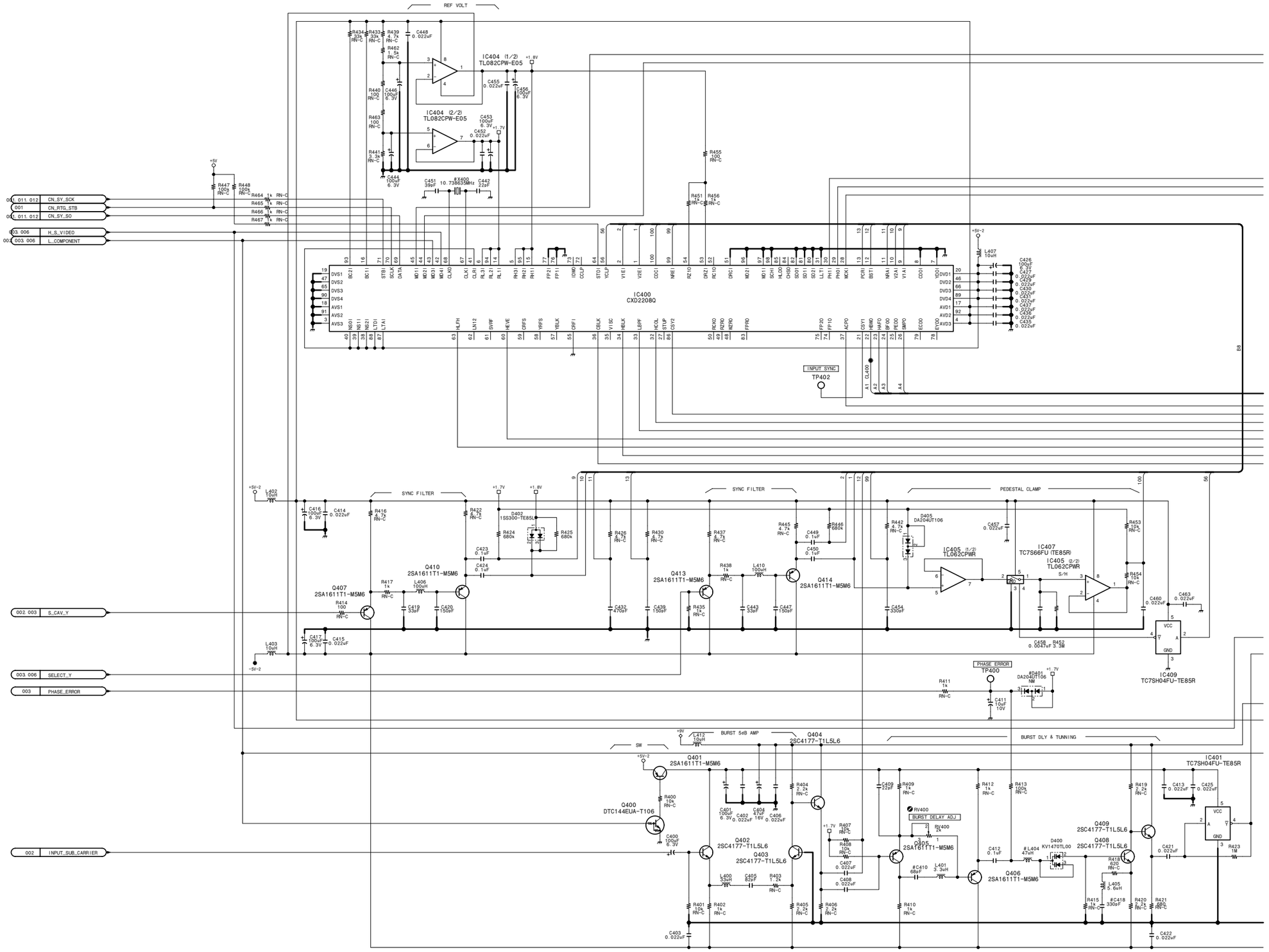

15-168

http://getMANUAL.com

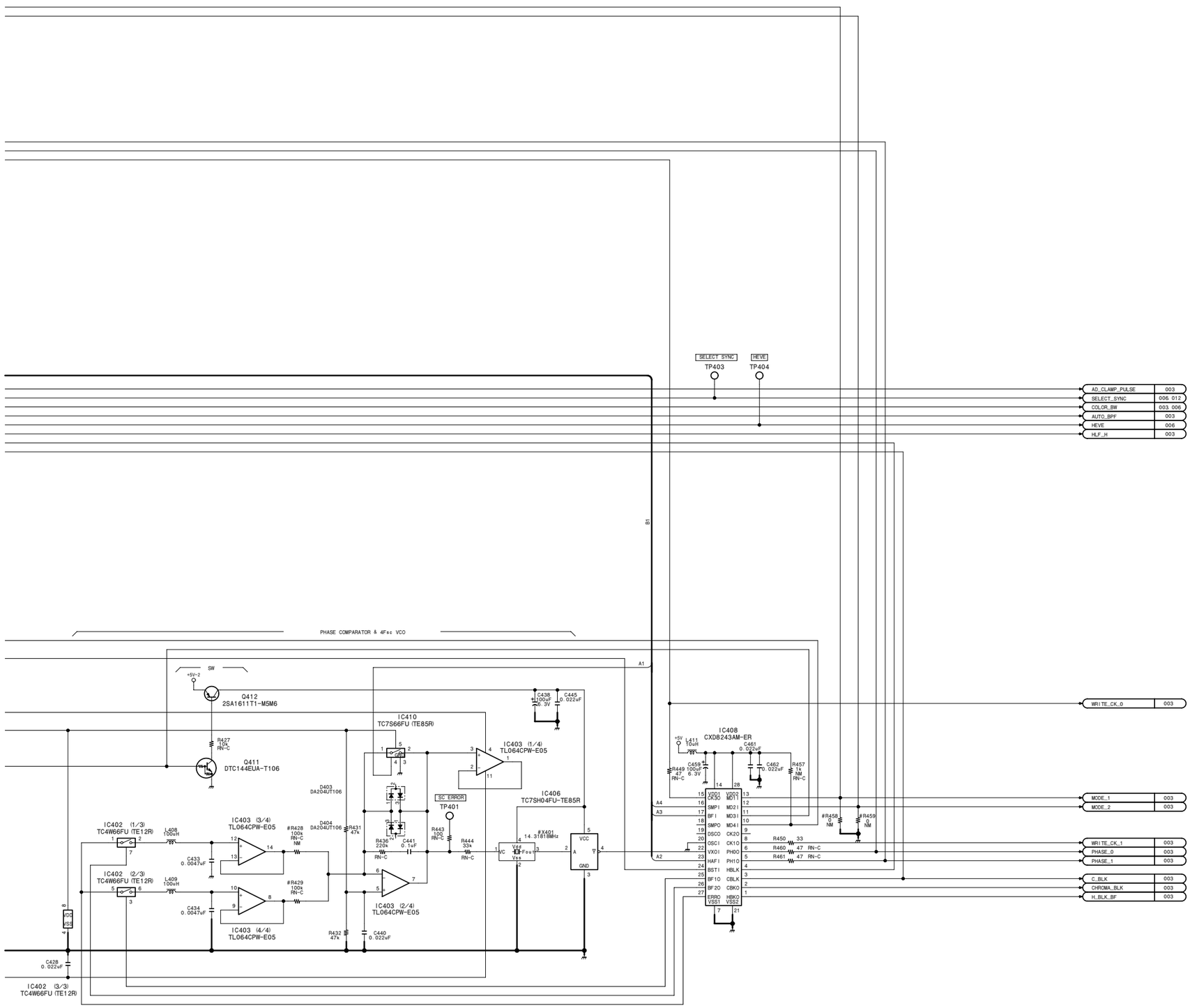

#	NTSC	PAL
C410	68pF 50V CH	22pF 50V CH
C418	330pF 50V CH	220pF 50V CH
D401	NM	DA204UT106
L404	47uH 10%	33uH 10%
R428	NM	330k 1/16W 0.5%
R429	100k 1/16W 0.5%	330k 1/16W 0.5%
R458	NM	0 OW
R459	NM	0 OW
X400	10.738635M	10.664135M
X401	14.31818MH	17.734475M

Analog video input・output process/reference

VPR-71 (4/13)

BOARD NO. 1-679-117-12

LOT NO. 064-

DSR-1800_VPR-71_012_4

VPR-71 (5/13)

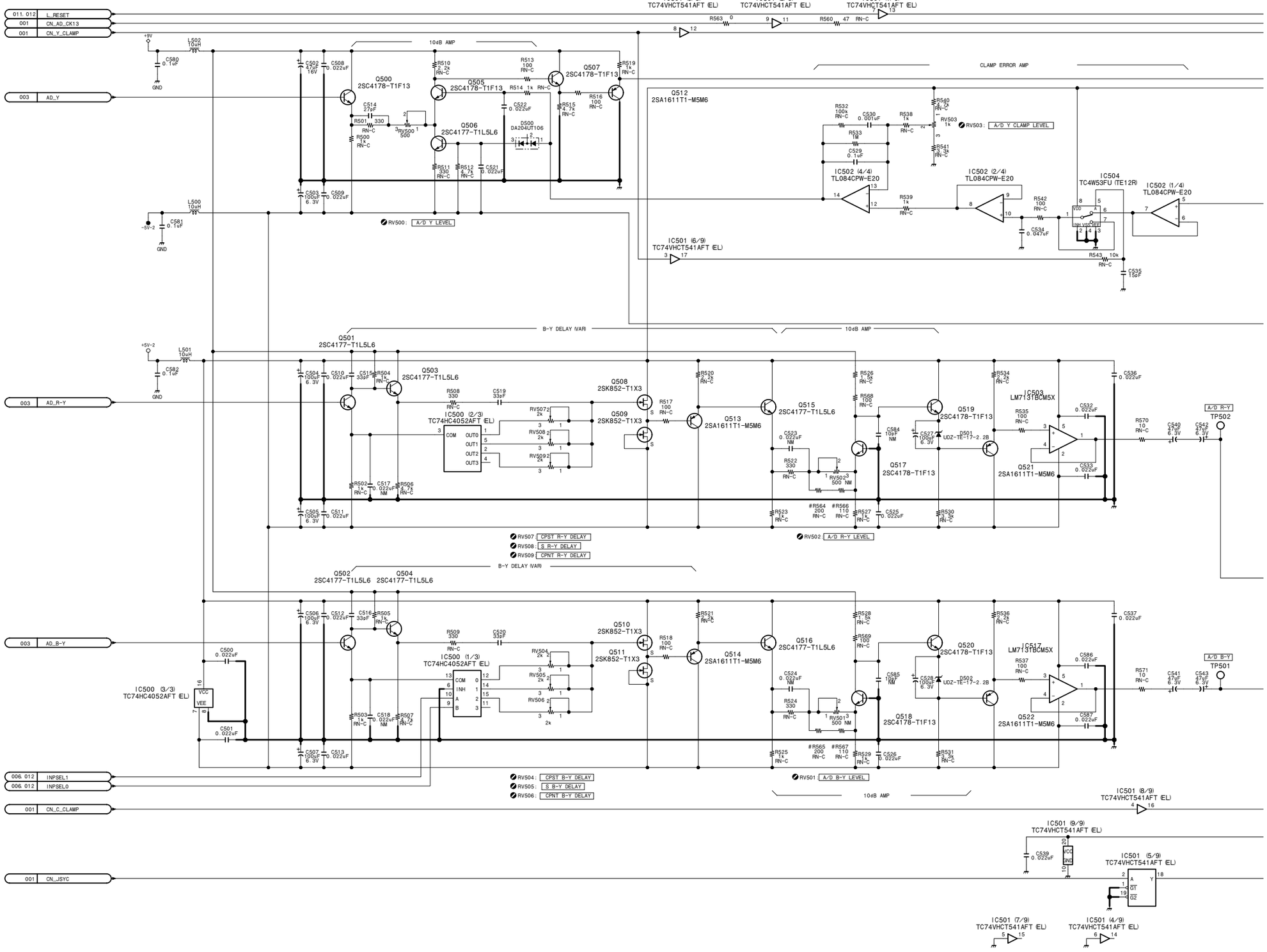

15-170

DSR-1800/P/1600/P

VPR-71 (5/13)

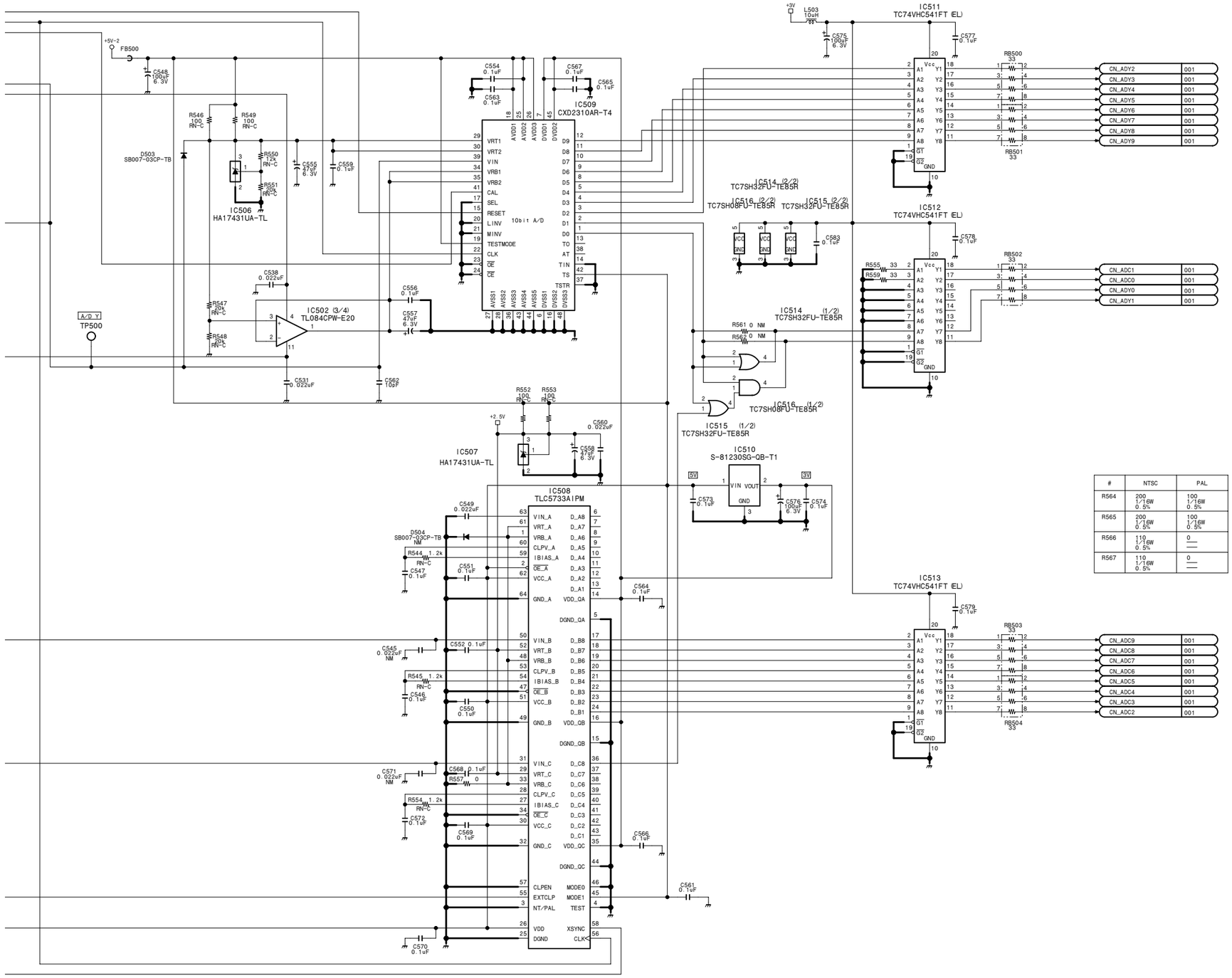

#	NTSC	PAL
R564	200 1/16W 0.5%	100 1/16W 0.5%
R565	200 1/16W 0.5%	100 1/16W 0.5%
R566	110 1/16W 0.5%	0 —
R567	110 1/16W 0.5%	0 —

Analog video input・output process/reference

VPR-71 (5/13)

BOARD NO. 1-679-117-12
LOT NO. 064-
DSR-1800_VPR-71_012_5

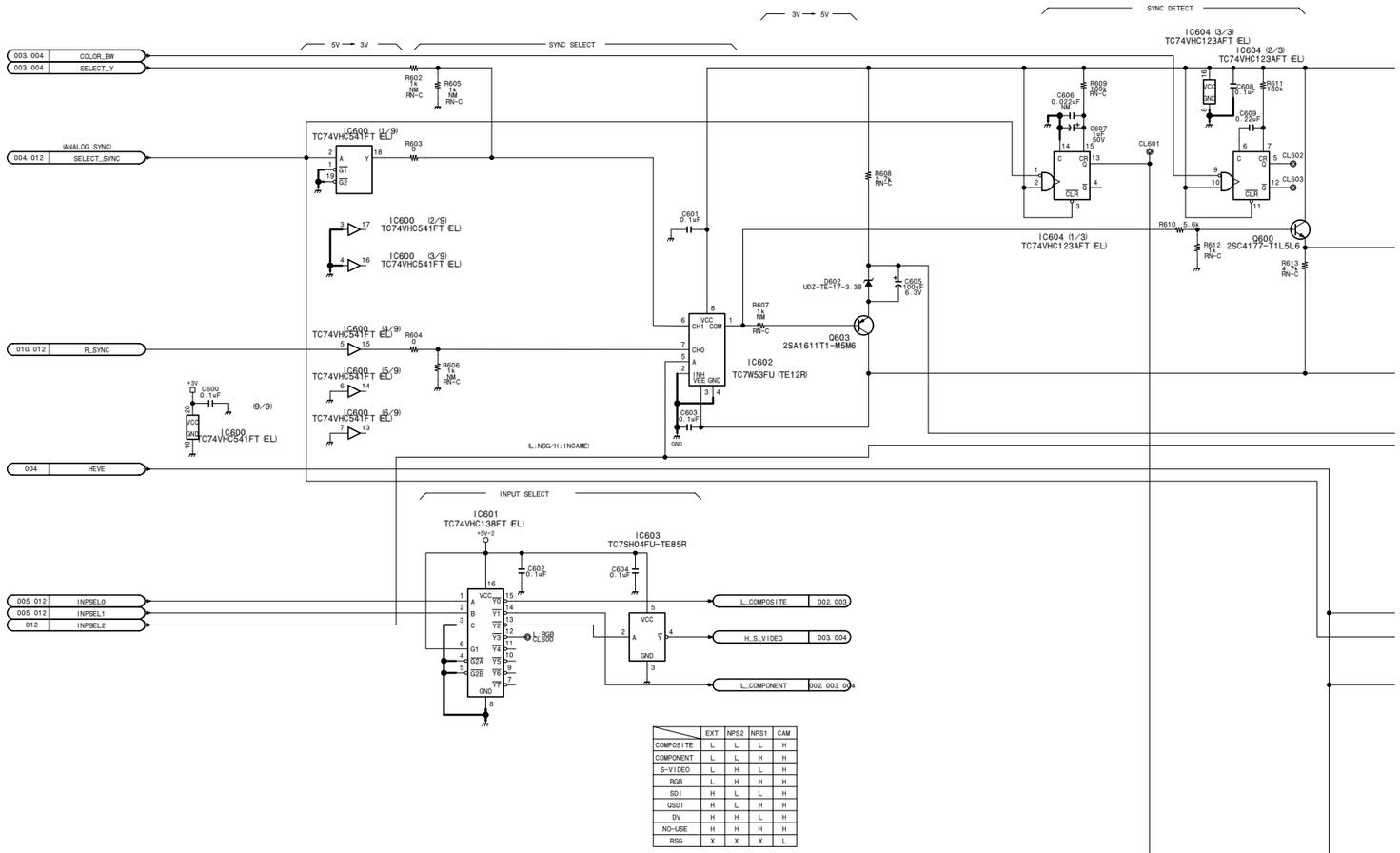

	EXT	NPS2	NPS1	CAM
COMPOSITE	L	L	L	H
COMPONENT	L	L	H	H
S-VIDEO	L	H	L	H
RGB	L	H	H	H
SDI	H	L	L	H
QSDI	H	L	H	H
DV	H	H	L	H
NO-USE	H	H	H	H
RSG	X	X	X	L

VPR-71 (6/13)

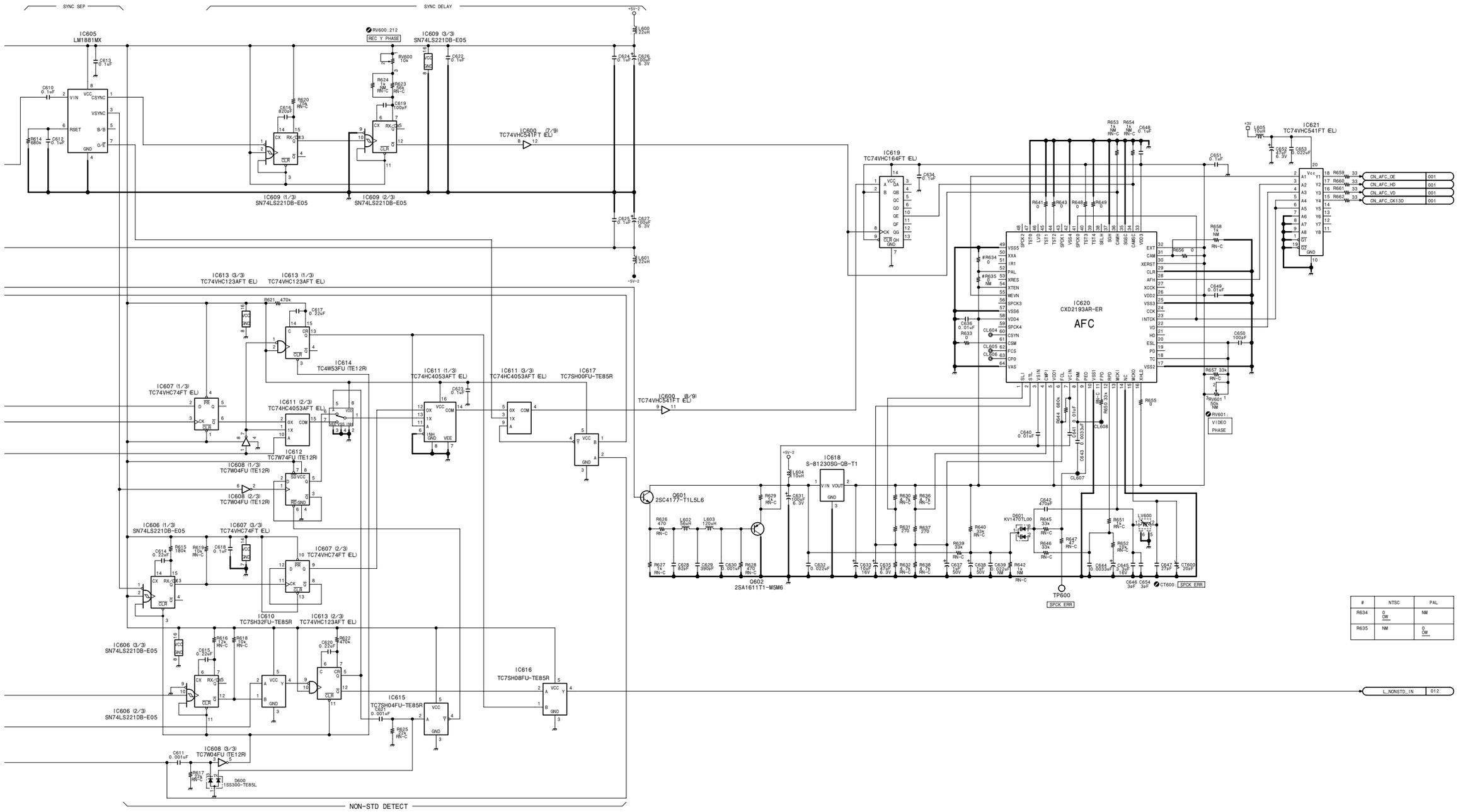

#	NTSC	PAL
R634	0 Ω	NM
R635	NM	0 Ω

Analog video input・output process/reference

VPR-71 (6/13)

BOARD NO. 1-679-117-12
LOT NO. 064-
DSR-1800_VPR-71_012_6

VPR-71 (7/13)

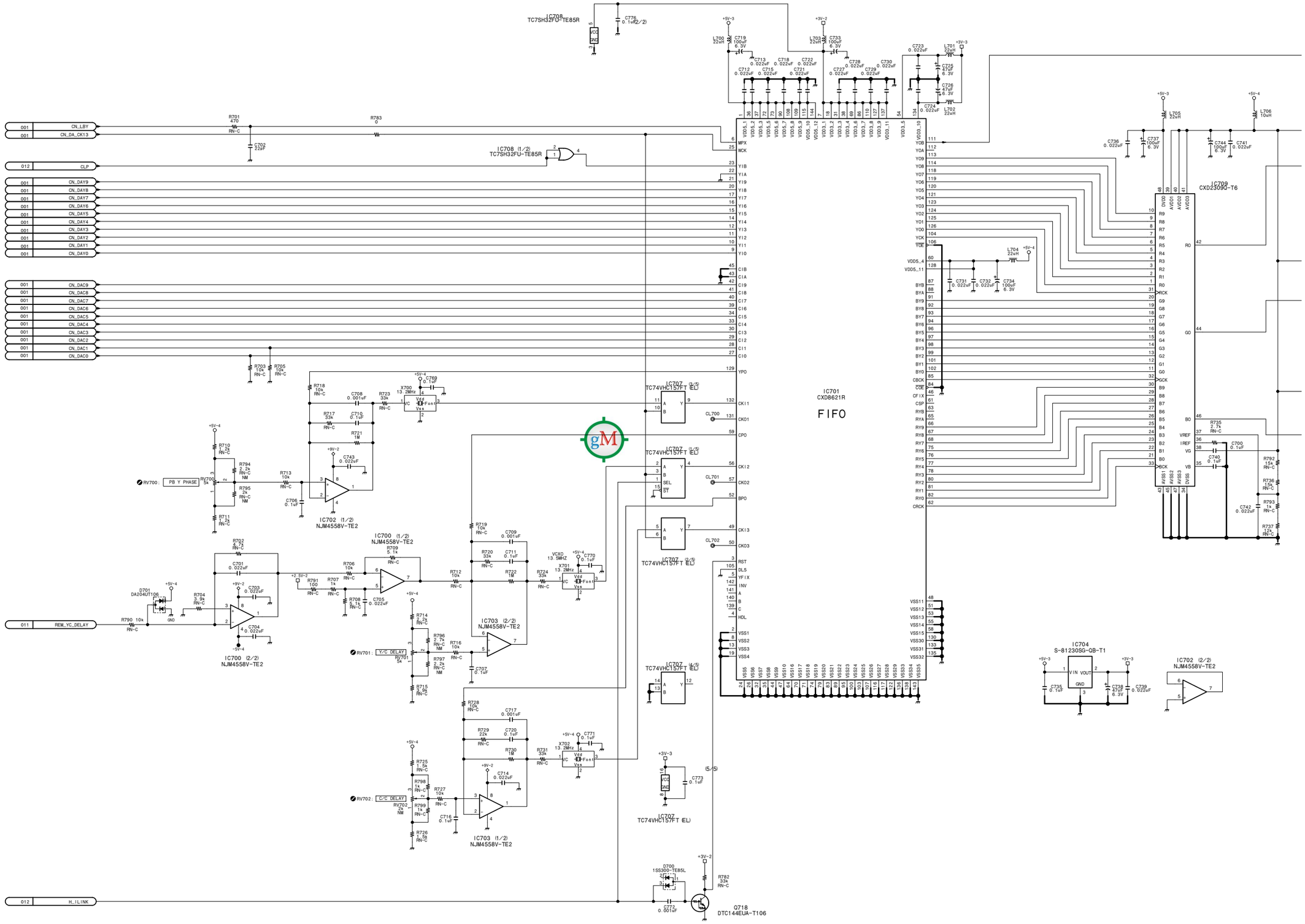

15-174

DSR-1800/P/1600/P

VPR-71 (7/13)

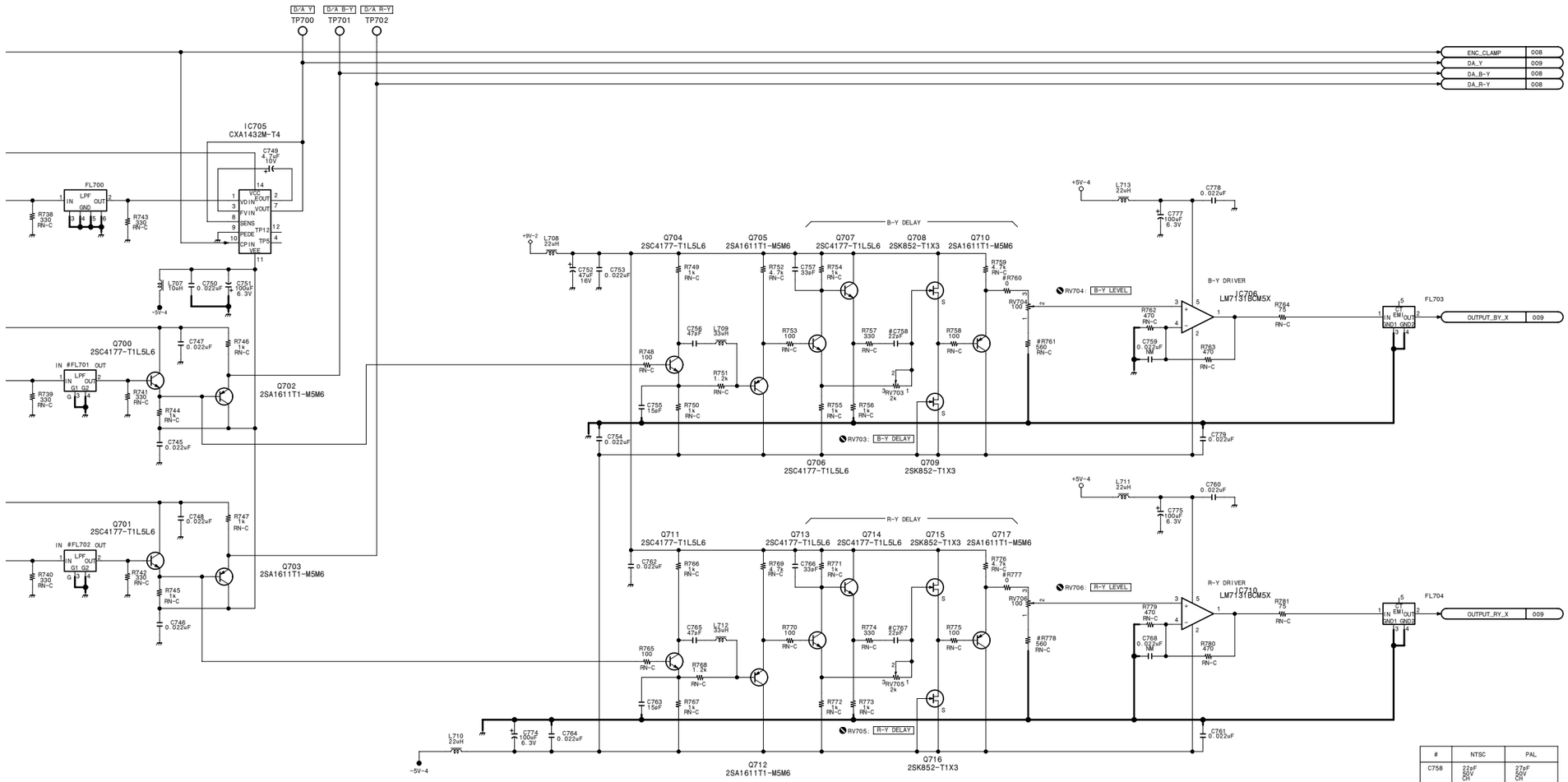

#	NTSC	PAL
C758	22pF 50V CH	27pF 50V CH
C767	22pF 50V CH	27pF 50V CH
FL701	123359821	123359921
FL702	123359821	123359921
R760	0 0W	180 1/16W 0.5%
R761	560 1/16W 0.5%	360 1/16W 0.5%
R777	0 0W	180 1/16W 0.5%
R778	560 1/16W 0.5%	360 1/16W 0.5%

Analog video input・output process/reference

VPR-71 (7/13)

BOARD NO. 1-679-117-12

LOT NO. 064-

DSR-1800_VPR-71_012_7

VPR-71 (8/13)

#	NTSC	PAL
C813	110pF 50V CH	150pF 50V CH
C841	27pF 50V CH	33pF 50V CH
C842	27pF 50V CH	33pF 50V CH
C844	56pF 50V CH	68pF 50V CH
C845	56pF 50V CH	68pF 50V CH
C846	27pF 50V CH	33pF 50V CH
C847	27pF 50V CH	33pF 50V CH
C852	7pF 50V CH	4pF 50V CH
C853	NM	10pF 50V CH
L804	47uH 10%	27uH 5%
L805	47uH 10%	27uH 5%
L806	47uH 10%	27uH 5%
L807	47uH 10%	27uH 5%
L809	NM	22uH 10%
R805	5.1k 1/16W 0.5%	10k 1/16W 0.5%
R814	33k 1/16W 0.5%	20k 1/16W 0.5%
R850	NM	1k 1/16W 0.5%

Analog video input・output process/reference

VPR-71 (8/13)

BOARD NO. 1-679-117-12
LOT NO. 064-
DSR-1800_VPR-71_012_8

15-176

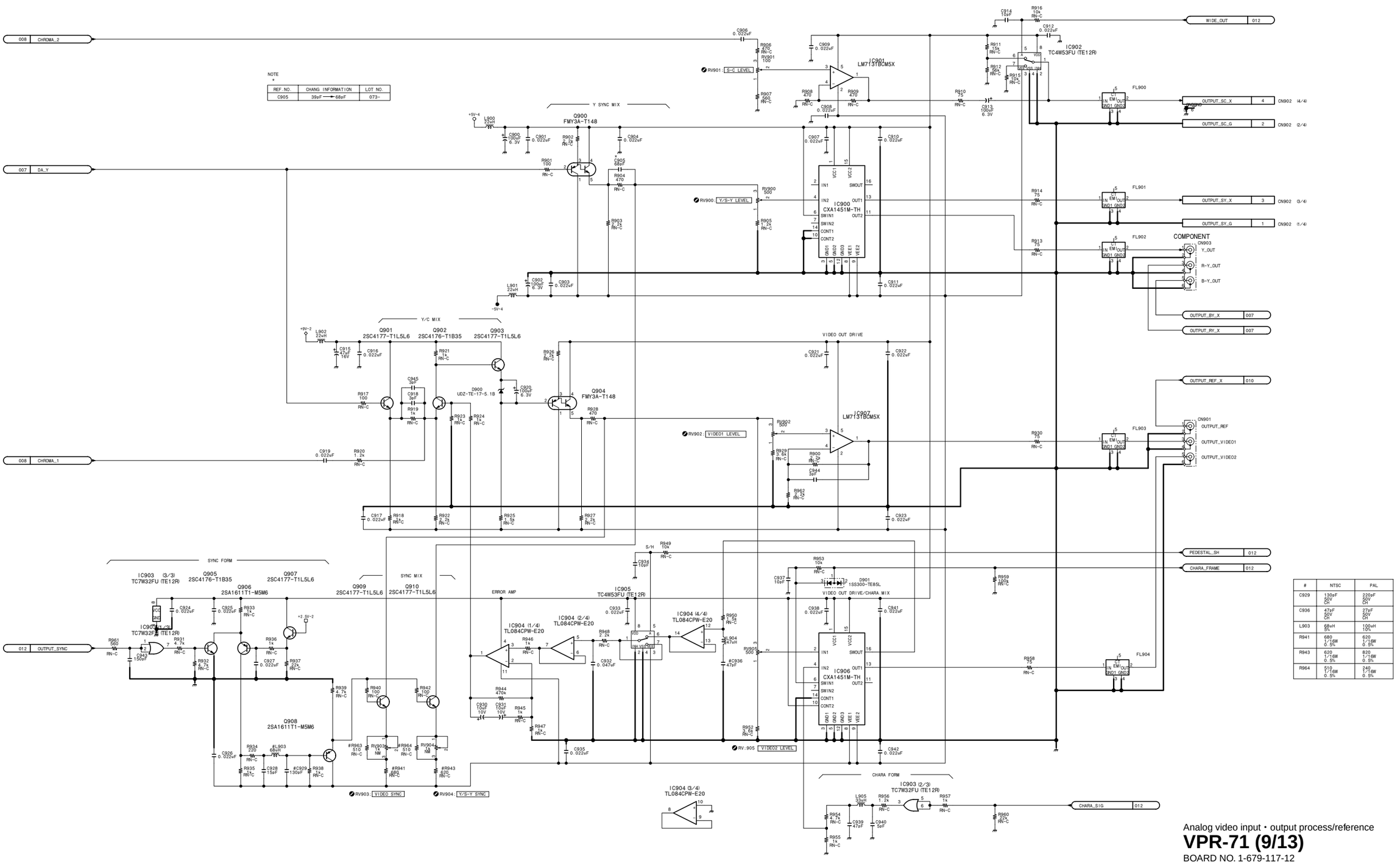

#	NTSC	PAL
C929	130pF 50V CH	220pF 50V CH
C936	47pF 50V CH	27pF 50V CH
L903	68uH 5%	100uH 10%
R941	680 1/16W 0.5%	620 1/16W 0.5%
R943	620 1/16W 0.5%	820 1/16W 0.5%
R964	510 1/16W 0.5%	240 1/16W 0.5%

Analog video input・output process/reference

VPR-71 (9/13)

BOARD NO. 1-679-117-12
LOT NO. 064-
DSR-1800_VPR-71_012_9

VPR-71 (10/13)

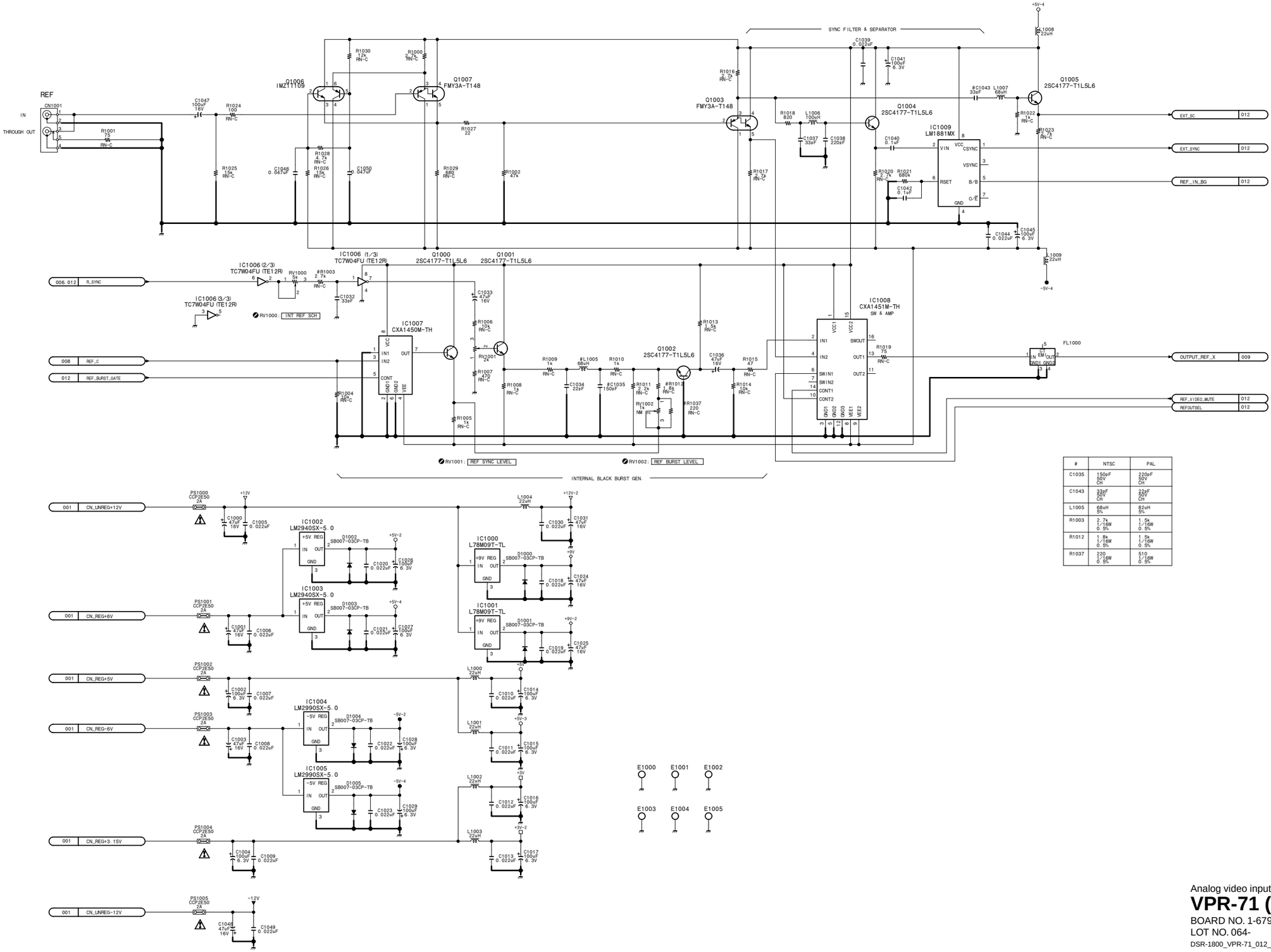

#	NTSC	PAL
C1035	150pF 50V CH	220pF 50V CH
C1043	33pF 500 CH	22pF 50V CH
L1005	68uH 5%	82uH 5%
R1003	2.7k 1/16W 0.5%	1.5k 1/16W 0.5%
R1012	1.8k 1/16W 0.5%	1.5k 1/16W 0.5%
R1037	220 1/16W 0.5%	510 1/16W 0.5%

Analog video input・output process/reference

VPR-71 (10/13)

BOARD NO. 1-679-117-12
LOT NO. 064-
DSR-1800_VPR-71_012_10

15-178

DSR-1800/P/1600/P

http://getMANUAL.com

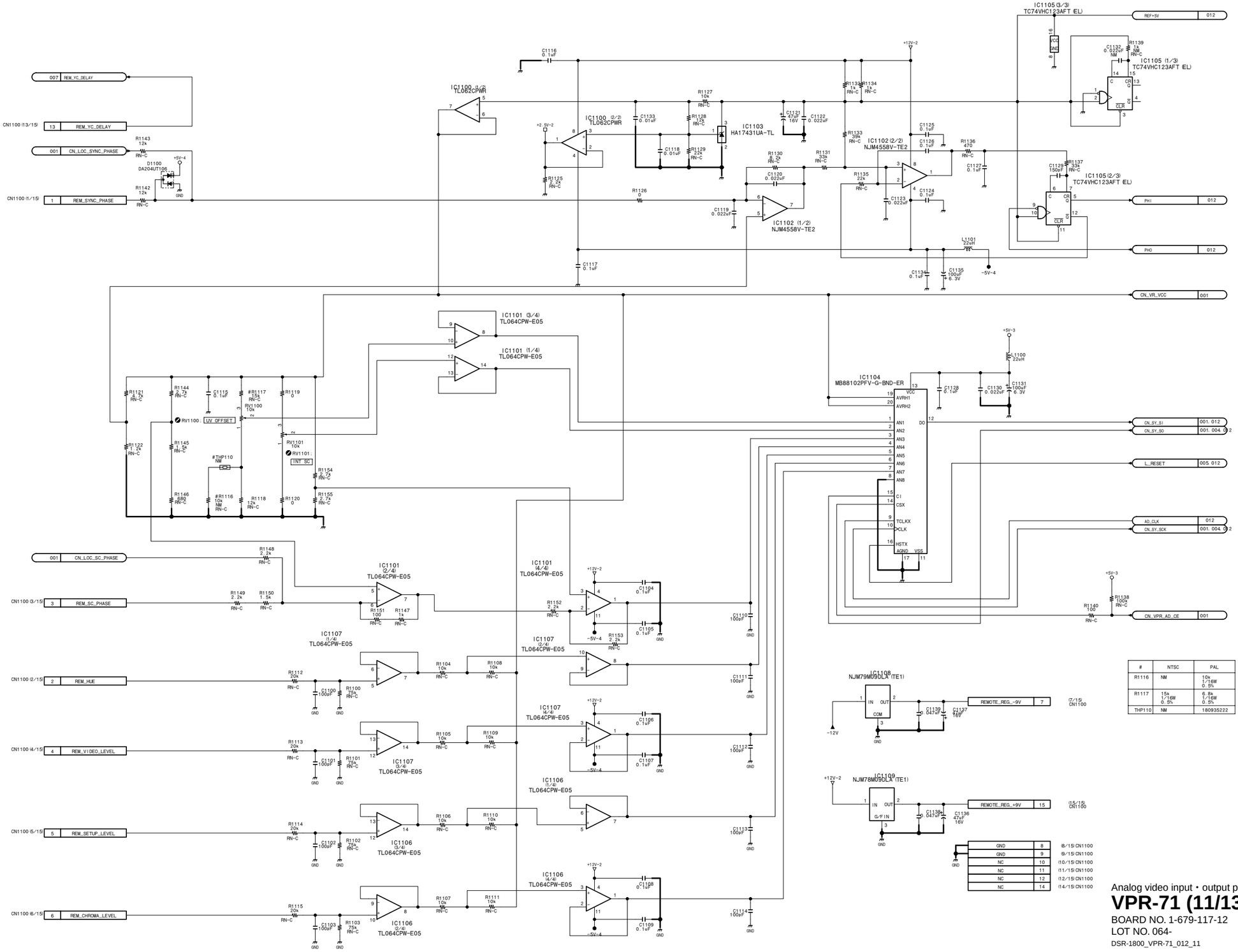

#	NTSC	PAL
R1116	NM	10k 1/16W 0.5%
R1117	15k 1/16W 0.5%	6.8k 1/16W 0.5%
THP110	NM	180935222

Analog video input・output process/reference

VPR-71 (11/13)

BOARD NO. 1-679-117-12
LOT NO. 064-
DSR-1800_VPR-71_012_11

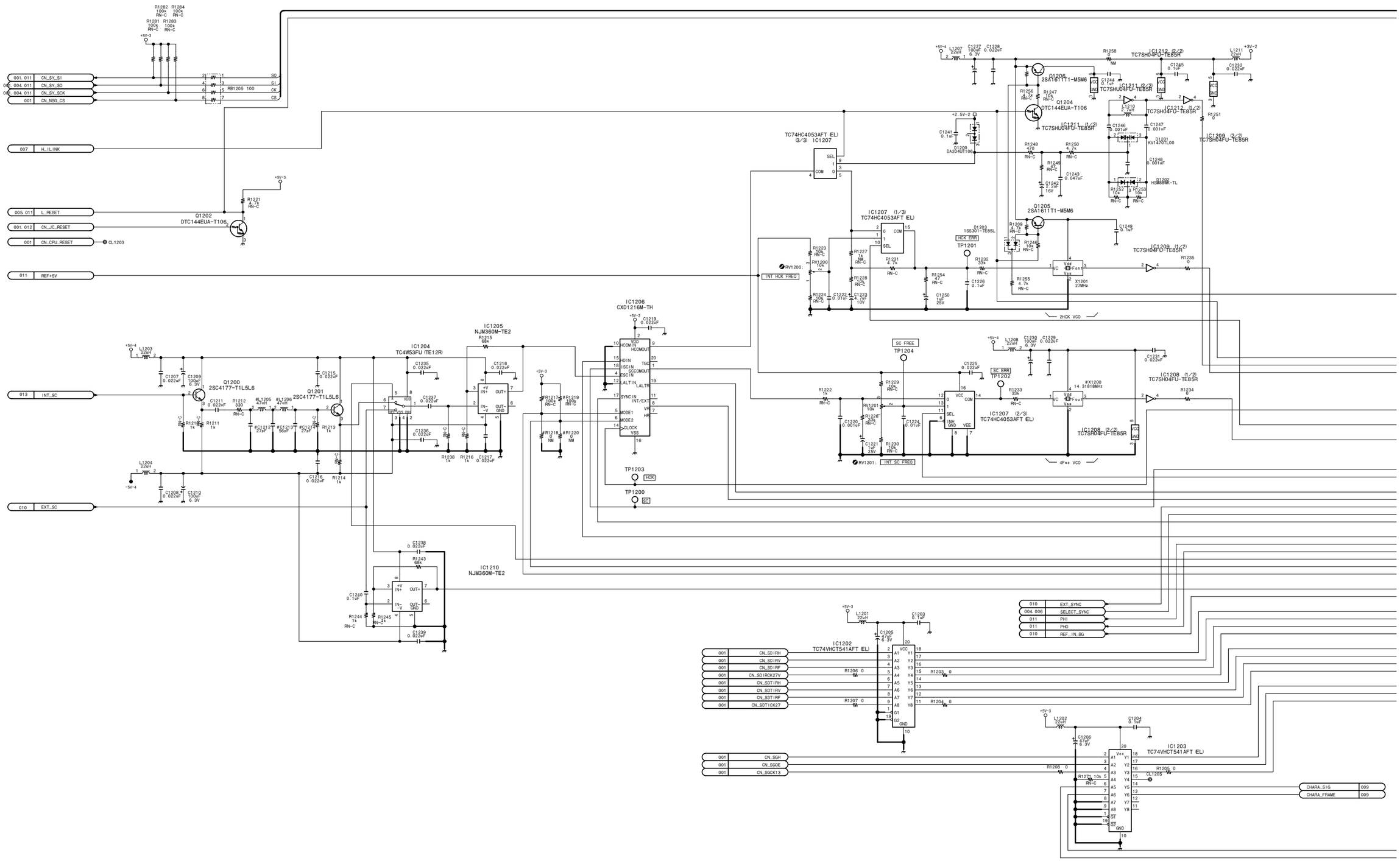
001, 011 CN_SY_SI
001, 004, 011 CN_SY_SO
001, 004, 011 CN_SY_SCK
001 CN_NSG_CS
RB1205 100
SO
SI
CK
CS
007 H_ILINK
005, 011 L_RESET
001, 012 CN_JC_RESET
001 CN_CPU_RESET
CL1203
011 REF+5V
Q1202
DTC144EUA-T106
R1282 R1284 100k RN-C
R1281 R1283 100k RN-C
R1221 4.7k RN-C
013 INT_SC
010 EXT_SC
Q1200
2SC4177-T1L5L6
Q1201
2SC4177-T1L5L6
IC1204
TC4W53FU (TE12R)
IC1205
NJM360M-TE2
IC1206
CXD1216M-TH
IC1210
NJM360M-TE2
TP1203
HCK
TP1200
SC
TC74HC4053AFT (EL)
(3/3) IC1207
RV1200: INT HCK FREQ
IC1207 (1/3)
TC74HC4053AFT (EL)
Q1206
2SA1611T1-M5M6
Q1204
DTC144EUA-T106
Q1205
2SA1611T1-M5M6
D1200
DA204UT106
D1202
1SS301-TE85L
HCK ERR
TP1201
X1201
27MHz
2HCK VCO
SC FREE
TP1204
SC ERR
TP1202
RV1201: INT SC FREQ
IC1207 (2/3)
TC74HC4053AFT (EL)
#X1200
14.31818MHz
4Fsc VCO
IC1212 (2/2)
TC7SH04FU-TE85R
IC1211 (2/2)
TC7SHU04FU-TE85R
IC1214 (2/2)
TC7SH04FU-TE85R
IC1209 (2/2)
TC7SH04FU-TE85R
IC1209 (1/2)
TC7SH04FU-TE85R
IC1208 (1/2)
TC7SH04FU-TE85R
IC1208 (2/2)
TC7SR04FU-TE85R
D1201
KV1470TL00
D1202
HSM88WK-TL
IC1202
TC74VHCT541AFT (EL)
IC1203
TC74VHCT541AFT (EL)
001 CN_SDIRH
001 CN_SDIRV
001 CN_SDIRF
001 CN_SDIRCK27V
001 CN_SDTIRH
001 CN_SDTIRV
001 CN_SDTIRF
001 CN_SDTICK27
001 CN_SGH
001 CN_SGDE
001 CN_SGCK13
010 EXT_SYNC
004, 006 SELECT_SYNC
011 PHI
011 PHO
010 REF_IN_BG
CHARA_SIG 009
CHARA_FRAME 009

VPR-71 (12/13)

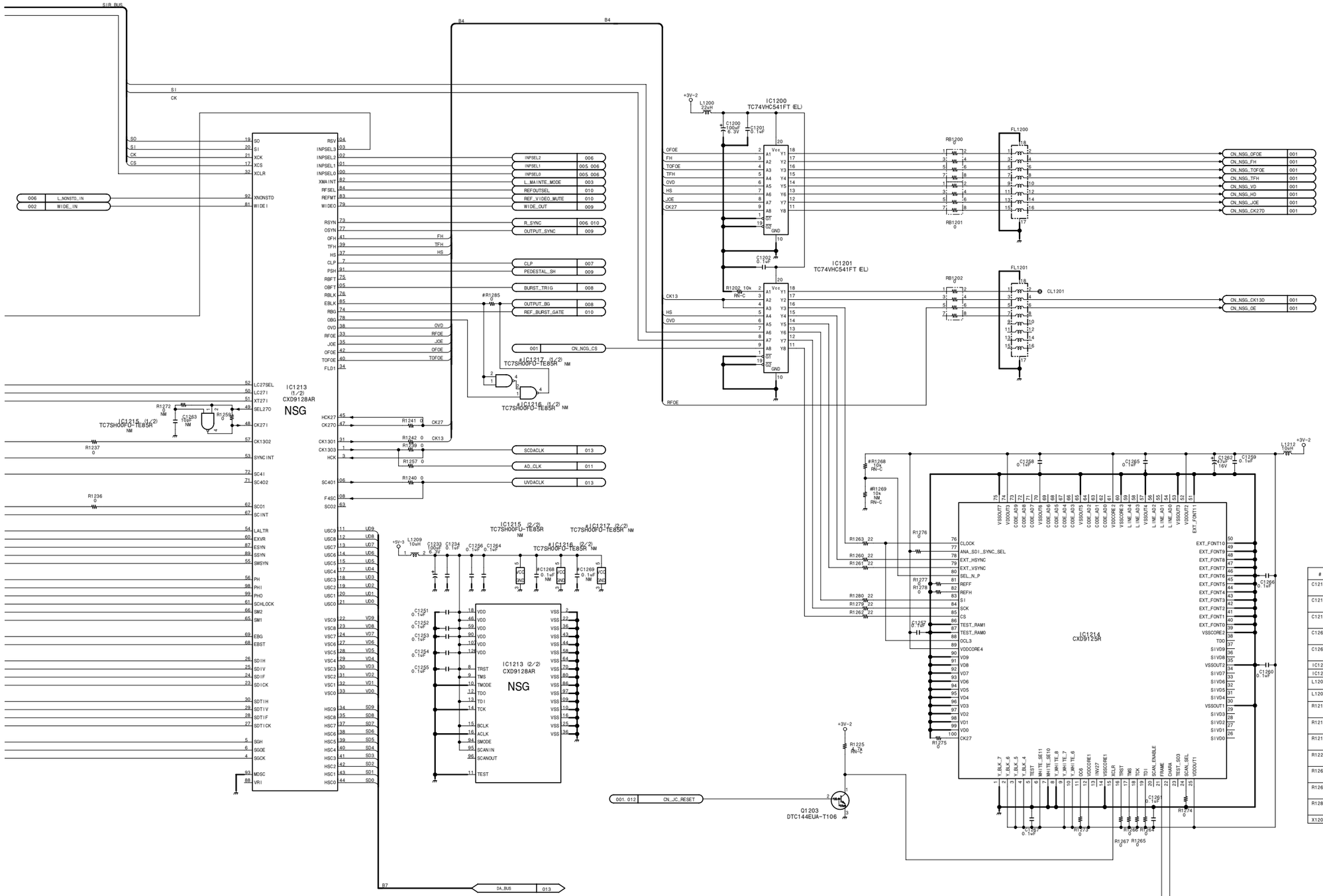

#	NTSC	PAL
C1212	27pF 50V CH	33pF 50V CH
C1213	56pF 50V CH	68pF 50V CH
C1214	27pF 50V CH	33pF 50V CH
C1268	NM	0.1uF 16V B
C1269	NM	0.1uF 16V B
IC1216	NM	TC7SH00FU-
IC1217	NM	TC7SH00FU-
L1205	47uH 10%	27uH 5%
L1206	47uH 10%	27uH 5%
R1217	100k 1/16W 0.5%	NM
R1218	NM	0 0W
R1219	100k 1/16W 0.5%	NM
R1220	NM	0 0W
R1268	100k 1/16W 0.5%	NM
R1269	NM	10k 1/16W 0.5%
R1285	0 —	NM
X1200	14.31818MH	17.734475MH

Analog video input・output process/reference

VPR-71 (12/13)

BOARD NO. 1-679-117-12
LOT NO. 064-
DSR-1800_VPR-71_012_12

VPR-71 (13/13)

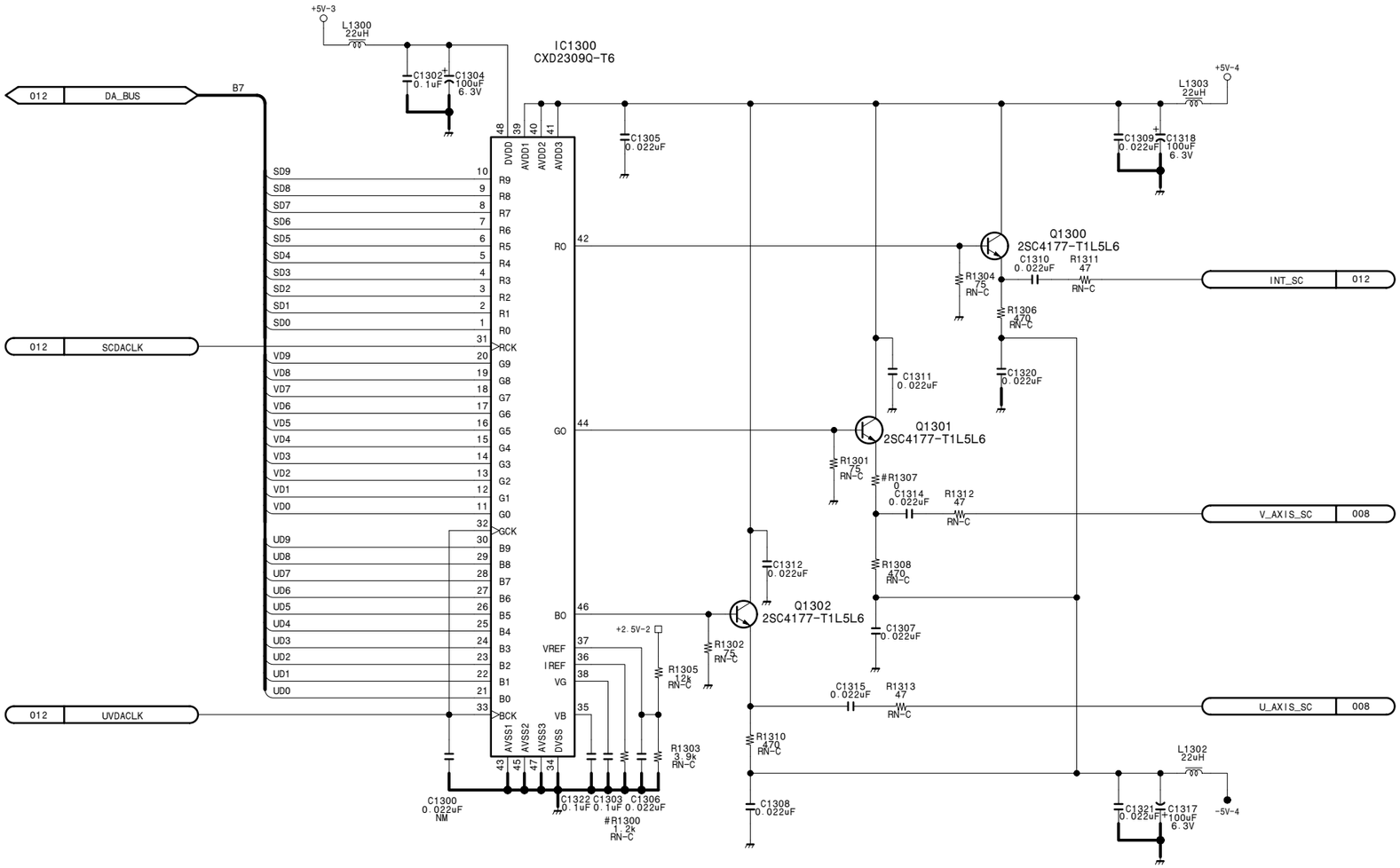

#	NTSC	PAL
R1300	1.2k 1/16W 0.5%	1.1k 1/16W 0.5%
R1307	0 —— ——	100 1/16W 0.5%

Analog video input・output process/reference

VPR-71 (13/13)

BOARD NO. 1-679-117-12
LOT NO. 064-
DSR-1800_VPR-71_012_13

Frame Wiring (1/2) DSR-1600/1600P

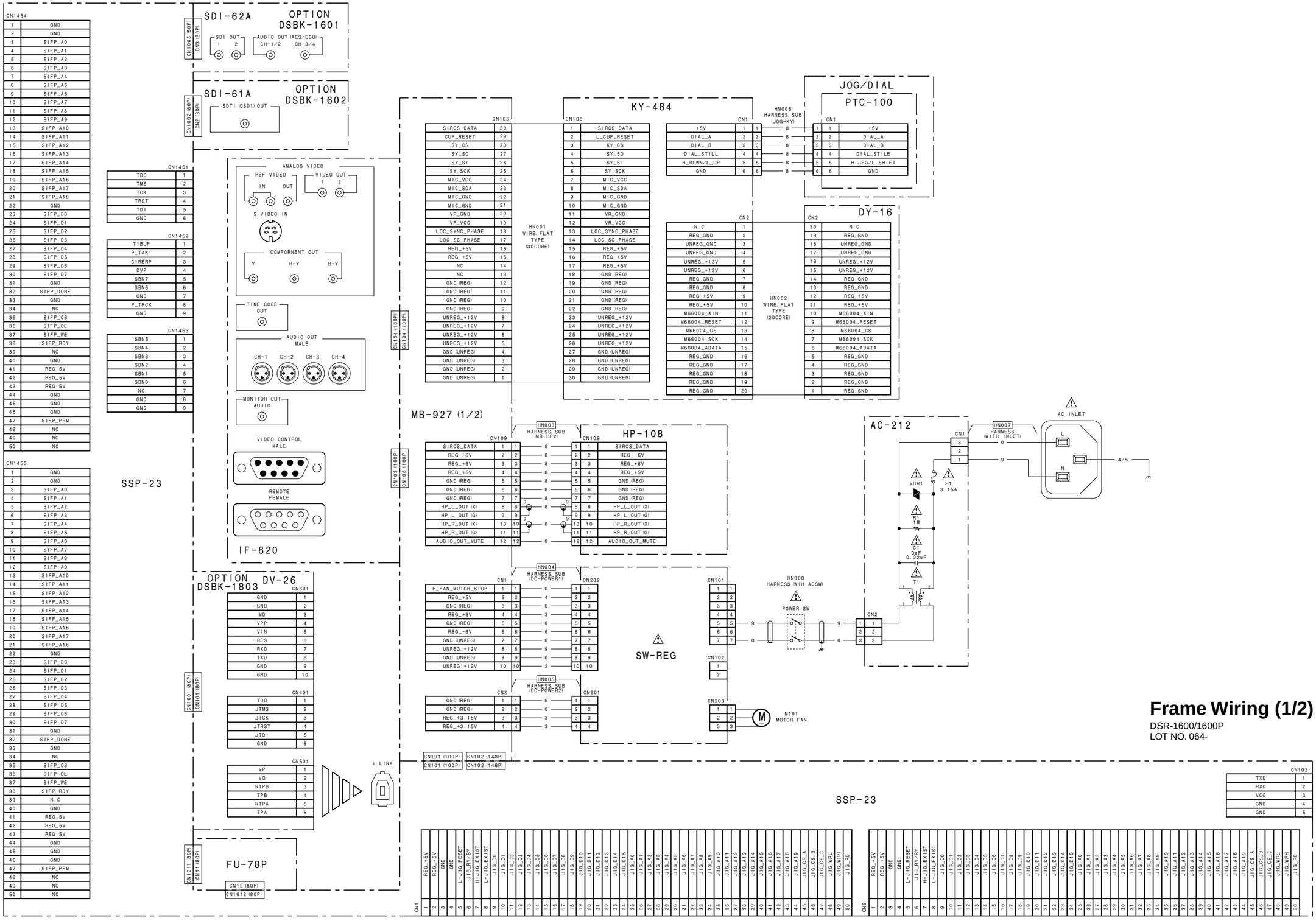

Frame Wiring (1/2)
DSR-1600/1600P
LOT NO. 064-

Frame Wiring (2/2) DSR-1600/1600P

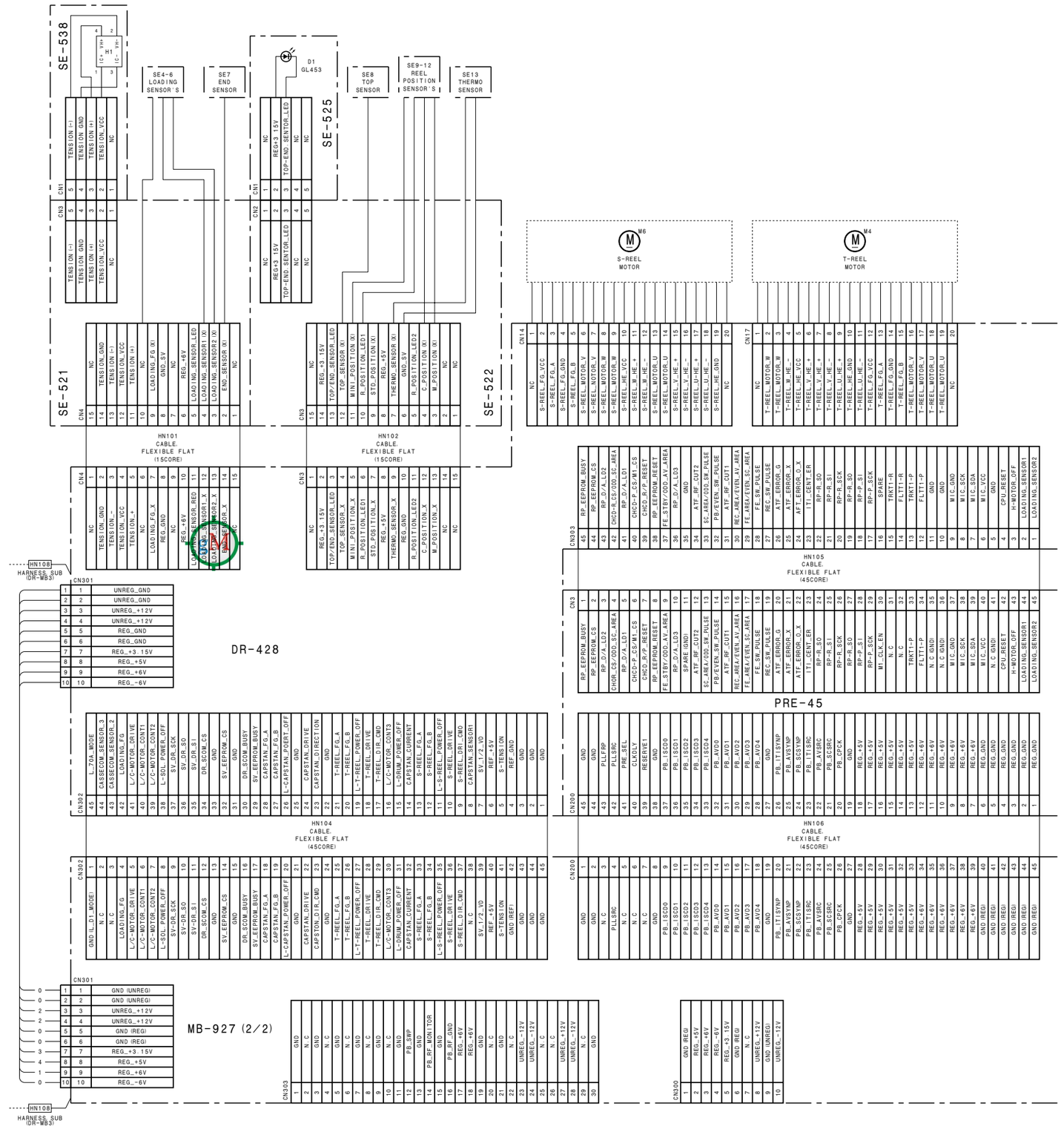

15-184

Frame Wiring (2/2) DSR-1600/1600P

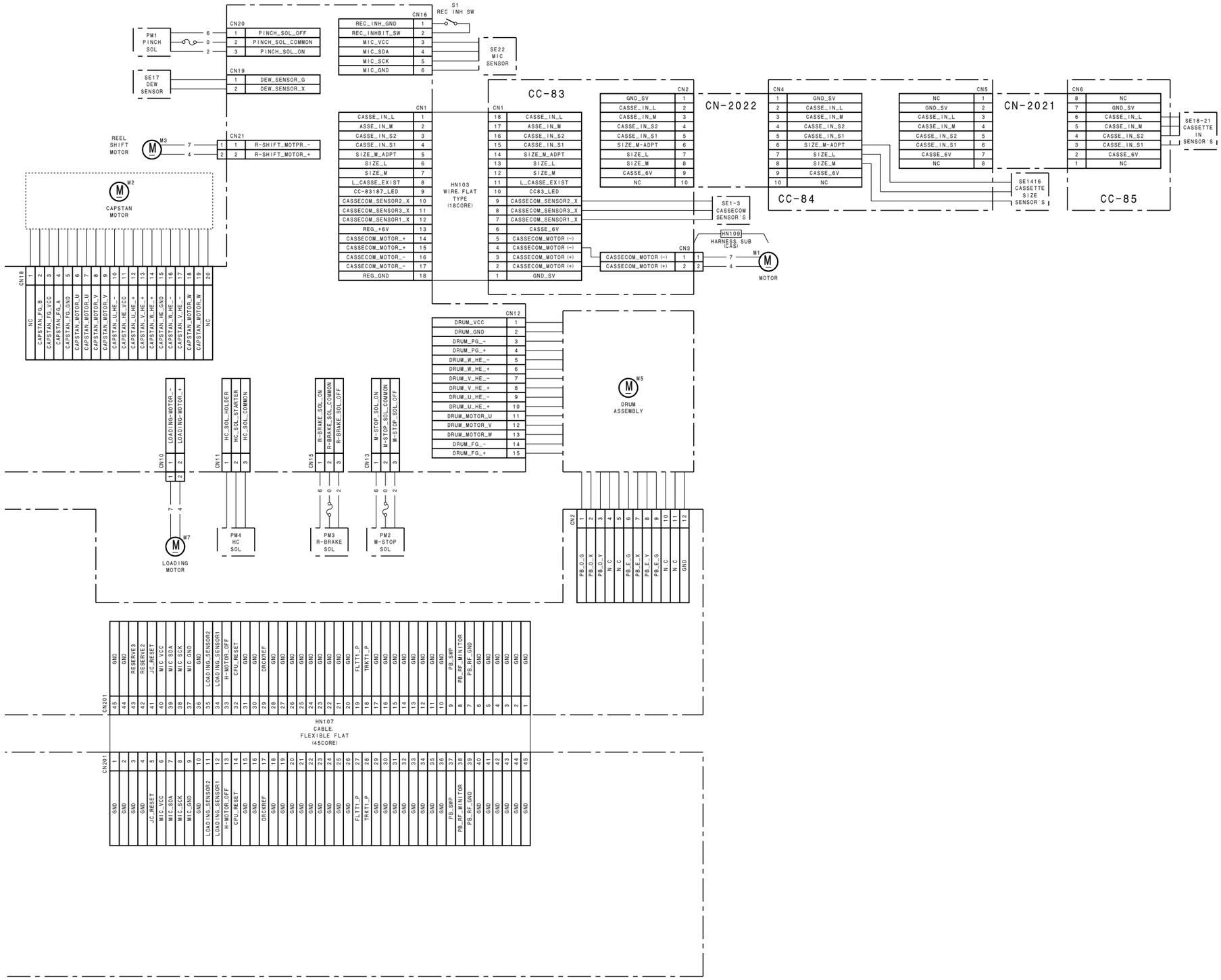

Frame Wiring (2/2)

DSR-1600/1600P
LOT NO. 064-

Frame Wiring (1/2) DSR-1800/1800P

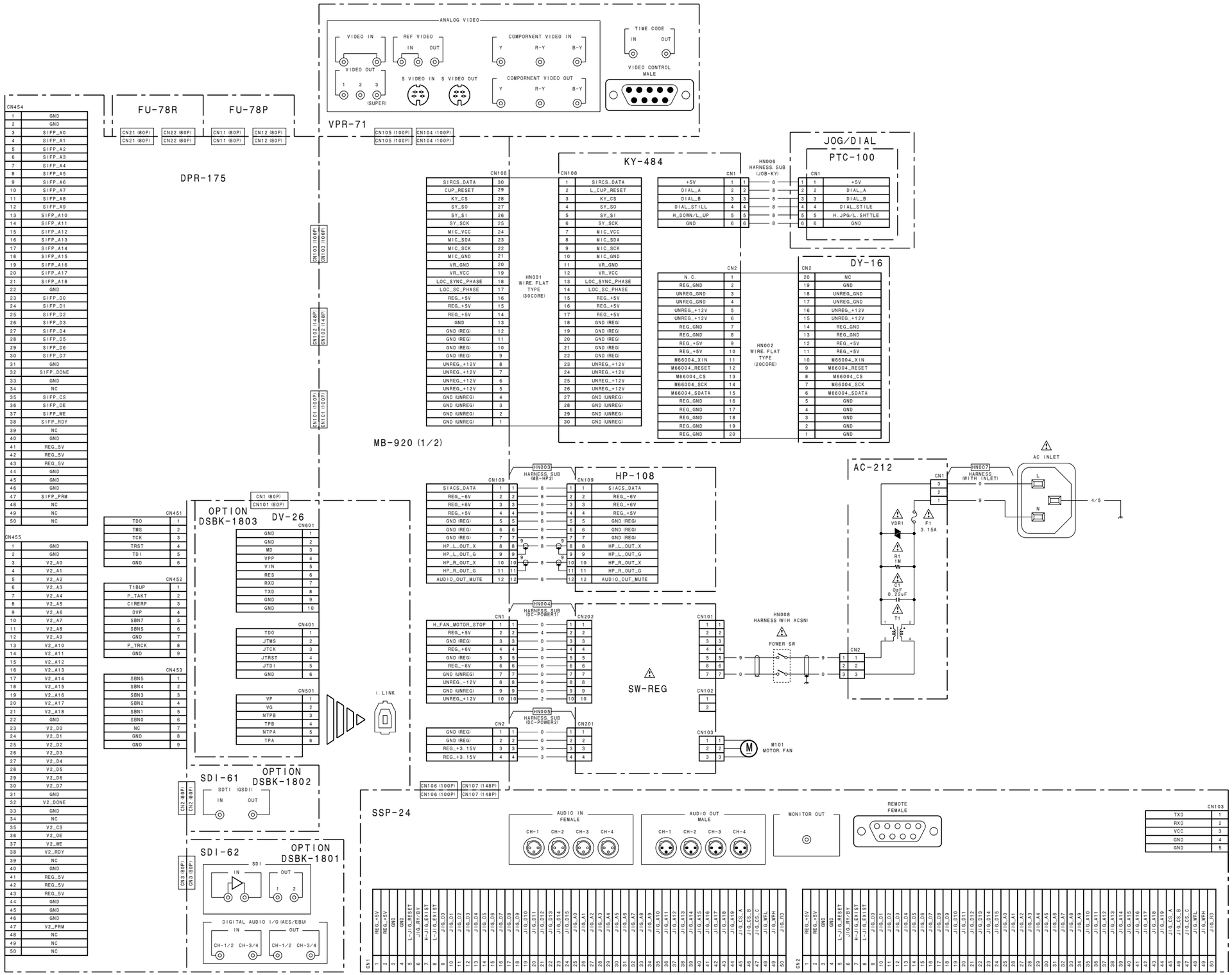

DSR-1800/P/1600/P

15-187

15-187

Frame Wiring (1/2)

DSR-1800/1800P
LOT NO. 064-

Frame Wiring (2/2) DSR-1800/1800P

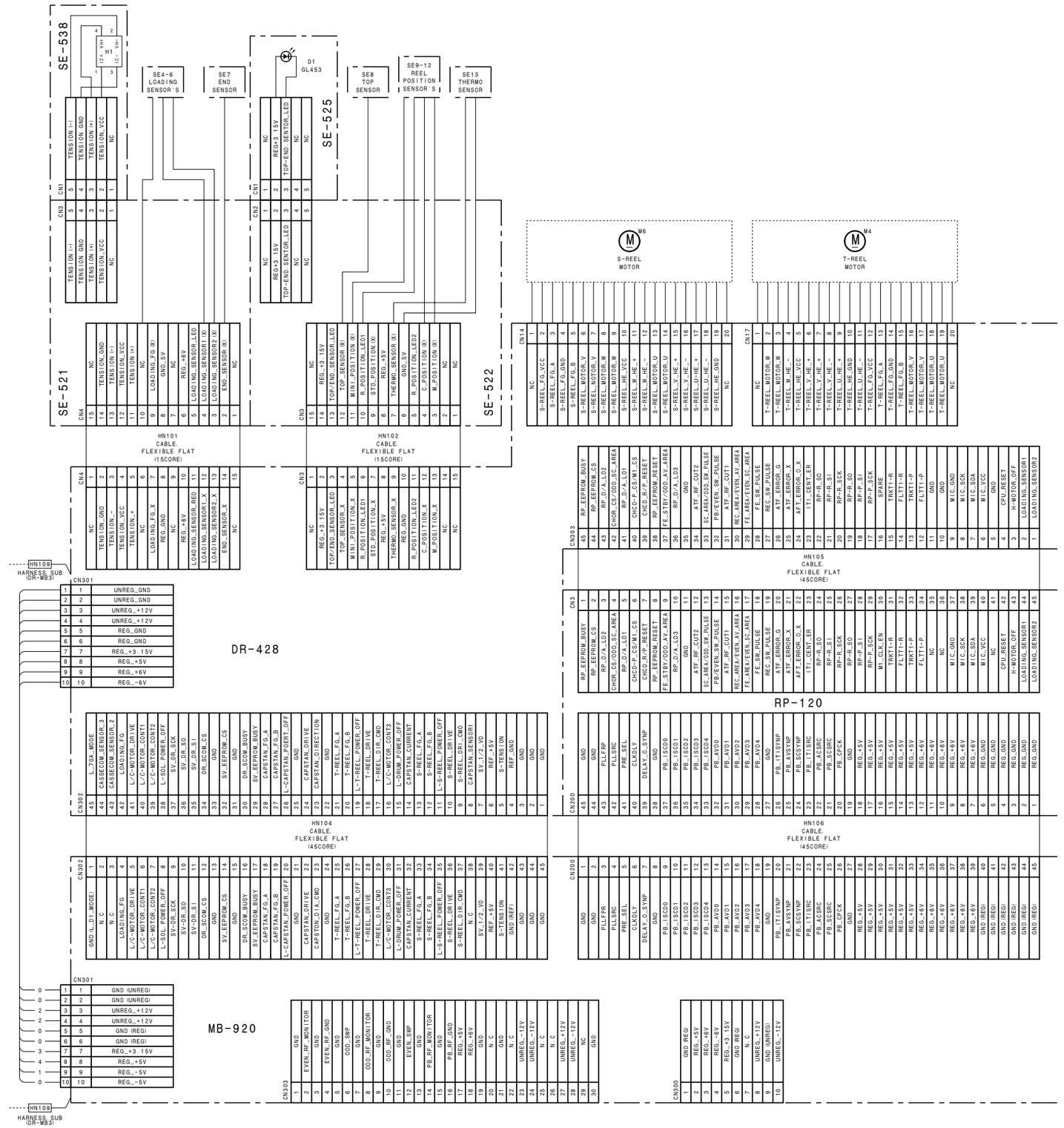

http://getMANUAL.com

Frame Wiring (2/2) DSR-1800/1800P

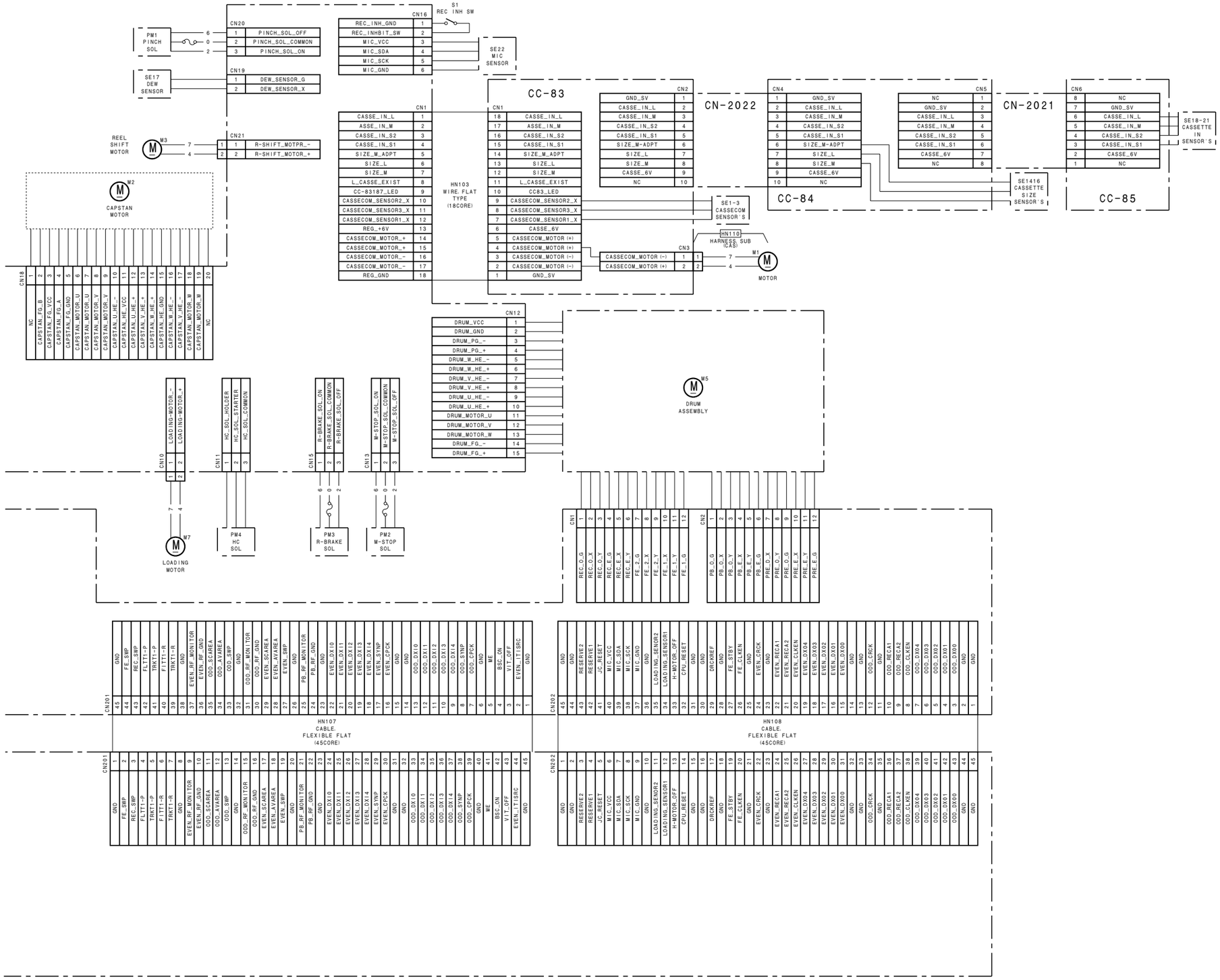

Frame Wiring (2/2)

DSR-1800/1800P
LOT NO. 064-

DSR-1800 (J, UC)
DSR-1800P (CE)
DSR-1600 (J, UC)
DSR-1600P (CE) J, E
9-955-242-21

Sony Corporation
Communication System Solutions Network Company

Printed in Japan
2000. 12 08
©2000